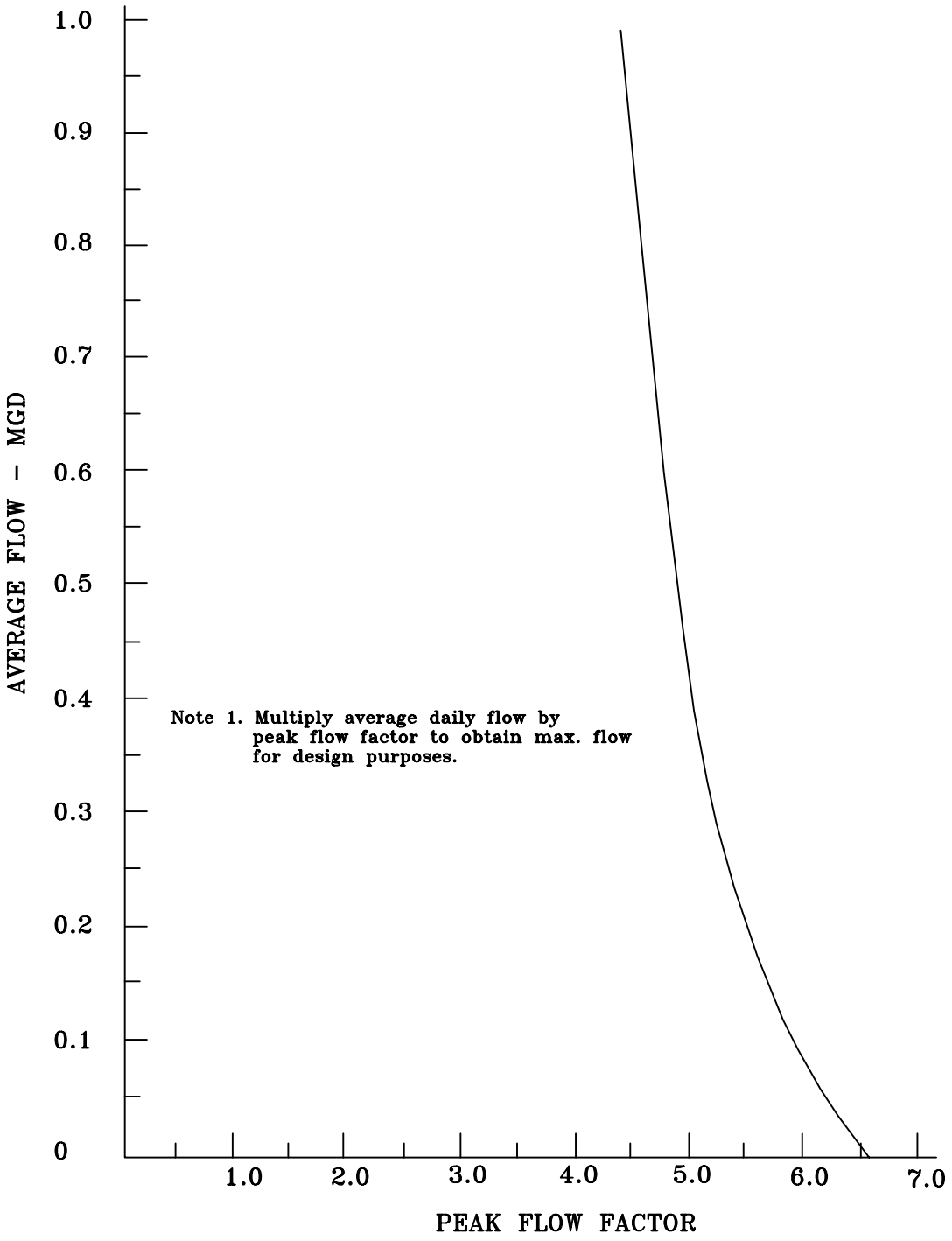

Ref. Sec. 10-0102.4B Rev. 1-00	PEAK FLOW CURVE 0.0 TO 1.0 MGD	PLATE NO. 1-10	STD. NO.

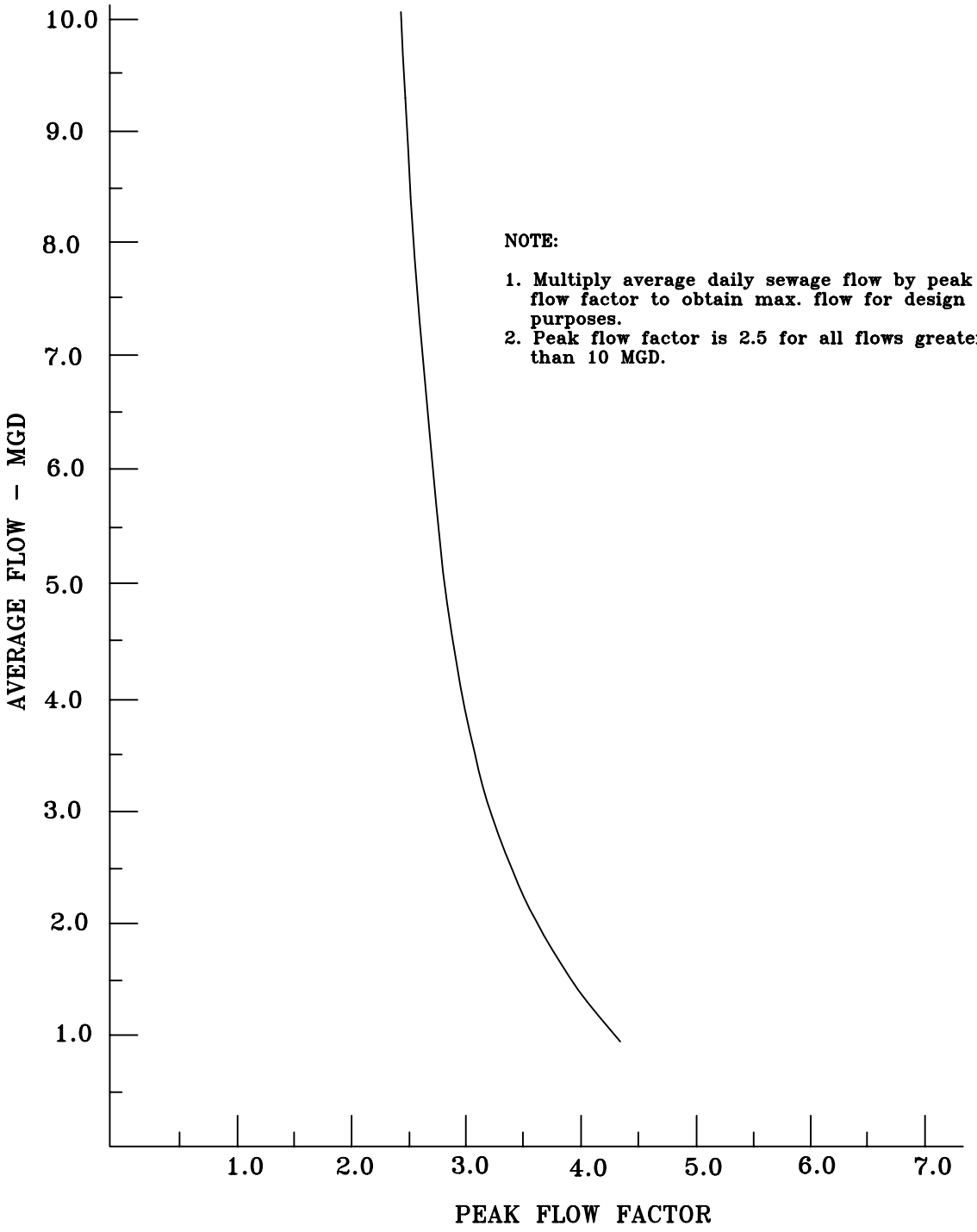

NOTE:

1. Multiply average daily sewage flow by peak flow factor to obtain max. flow for design purposes.
2. Peak flow factor is 2.5 for all flows greater than 10 MGD.

Ref. Sec. 10-0102.4B Rev. 1-00	PEAK FLOW CURVE 1.0 AND GREATER MGD	PLATE NO. 2-10	STD. NO.

NOTES:

1. Manhole to meet current requirements of ASTM Spec. C-478.
2. All reinforcing steel to meet current requirements of ASTM Spec. A-615.
3. Concrete to be Class A-4.
4. Tapered joint with O-ring gasket, or single offset joint with rubber gasket, to meet current requirements of ASTM Spec. C-443.
5. Pioneer 301 Mastic or approved equal shall be used in addition to the joint specified.
6. Grout inverts shall consist of a Portland Cement concrete mix to VDOT Spec. for Class B-2 or containing 1 part cement, 2 parts mortar sand and 3 1/2 parts aggregate. The surface shall be hand troweled smooth with no coarse aggregate exposed and the benches are to have a light broom finish.
7. Flexible joint required on all pipe connections to manholes. Flexible Joint pipe to manhole sleeve may be Kor-N-Seal, Interspace, Presswedge or approved equal. Installation shall be in accordance with manufacturer's instructions. Where field conditions will not permit the use of a sleeve, a maximum 24" stub may be used. (See Section 10.0102.5G.)
8. Joint configuration may be cast bell-up or spigot-up.
9. Manufacturer's name to be cast in steps or on inside face of cone and is to be clearly visible without entering the structure.

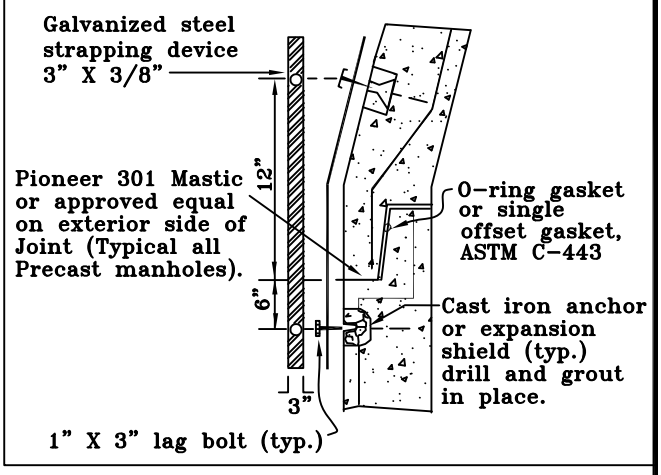

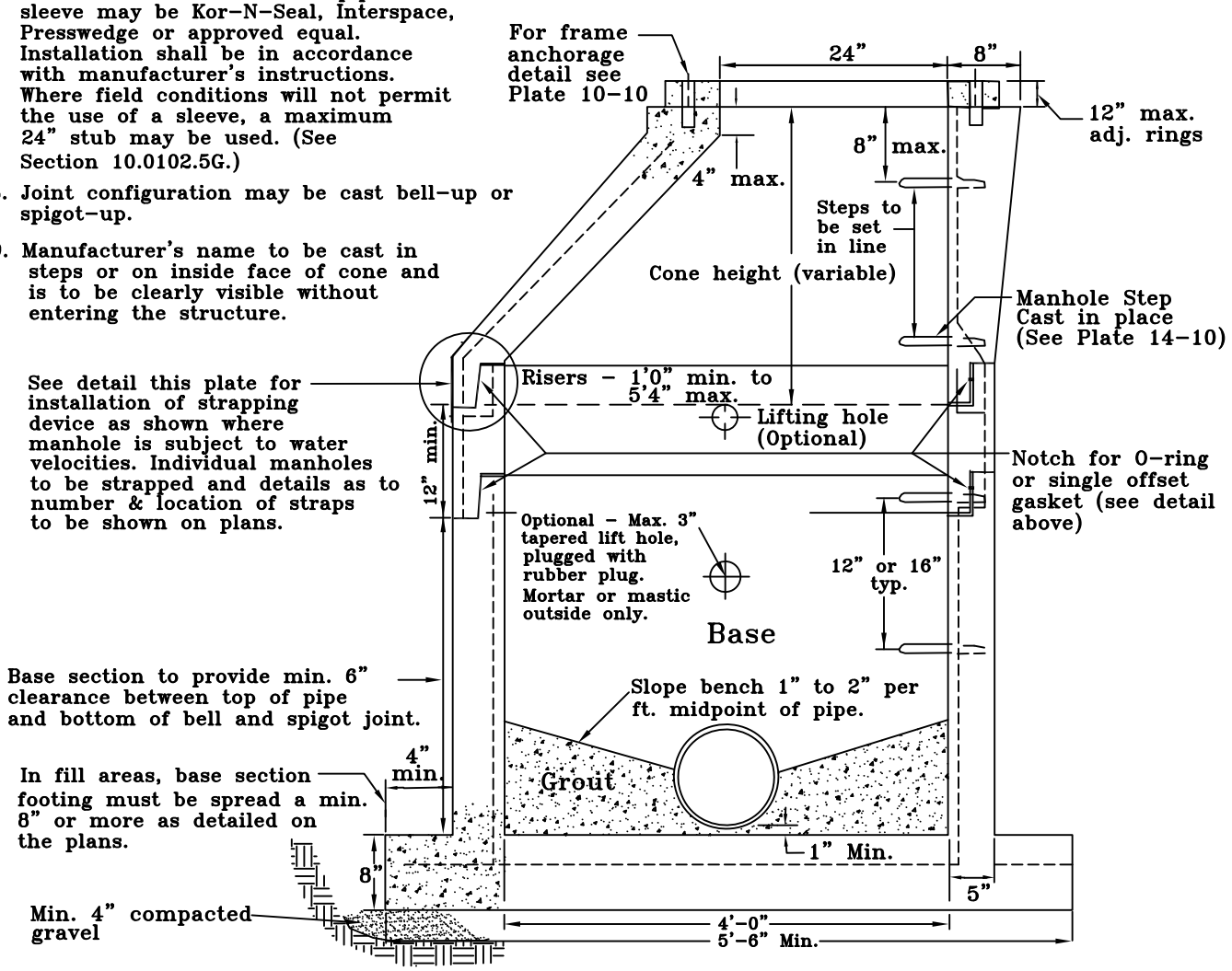

Ref. Sec. 10-0102.5D(7), Plate 4-10 Rev. 1-00 , 2011 Reprint, 4-13	TYPICAL 4'-0" ID PRECAST CONCRETE MANHOLE	PLATE NO. 3-10	STD. NO. DPW-15

MH DIMENSIONS

	MH DIA. IN FT.			
	5'0"	6'0"		
DIMENSIONS A	60"	72"		
B	84"	98"		
C	6"	7"		
D	8" min.	8" min.		

NOTES:

1. Concrete to be Class A-4.
2. Pipe connections to conform to Note 7, Plate 3-10.
3. All reinforcing steel to meet current requirements of ASTM Spec. A-615.
4. Manufacturer's name to be cast in steps or on inside face of cone and is to be clearly visible without entering the structure.
5. Manhole to meet current requirements of ASTM Spec. C-478.
6. Compacted gravel under base sections shall conform to Plate 3-10.
7. Joint configuration may be cast bell-up or spigot-up.
8. Pioneer 301 Mastic or approved equal shall be used in addition to the joint specified. (See Plate 3-10)

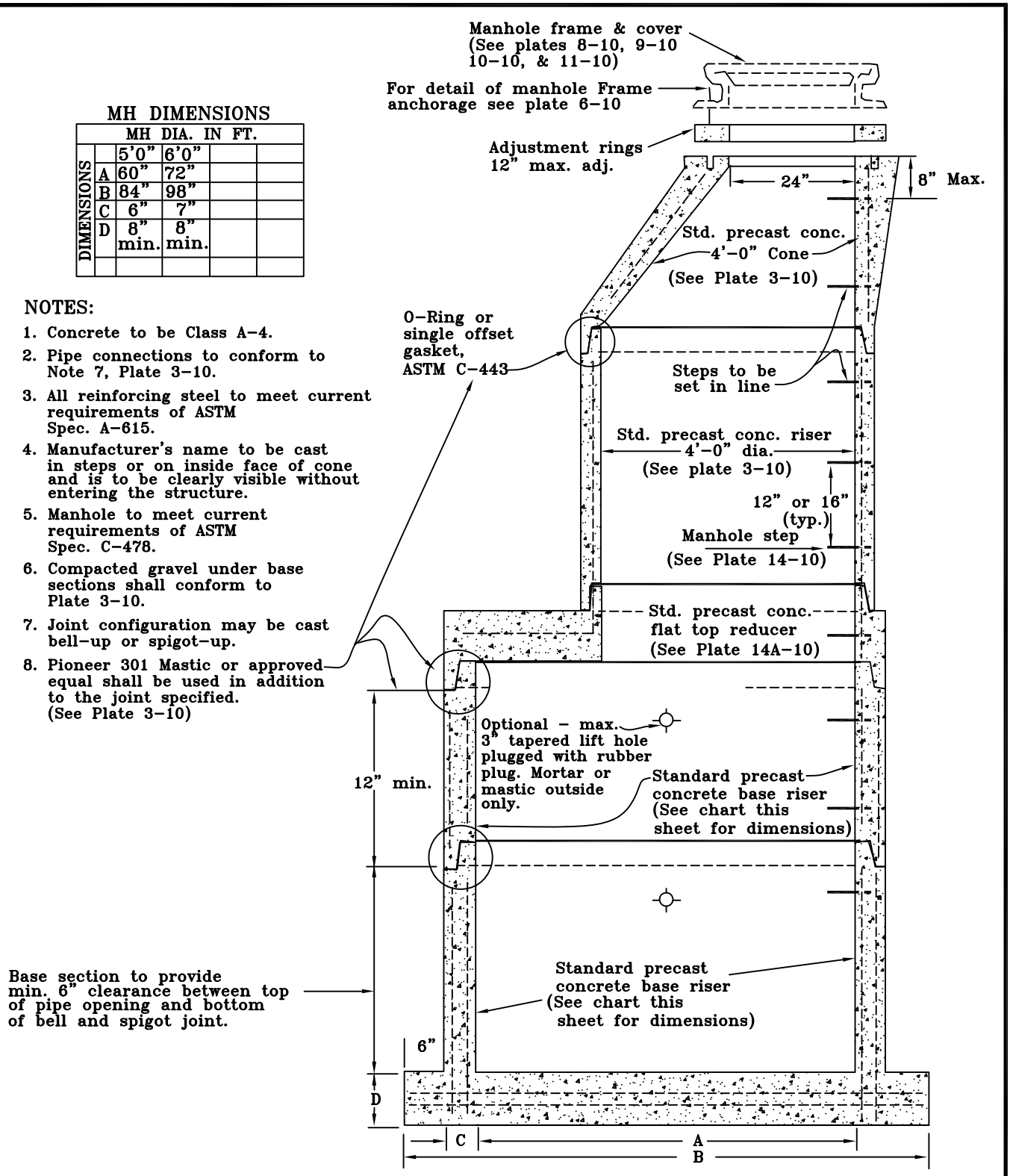

Ref. Sec. 10-0102.5D(7), Plates 3-10, 9-10, 10-10, 14-10, 14A-10 Rev. 1-00, 2011 Reprint, 4-13	TYPICAL 5'-0" & 6'-0" DIAMETER PRECAST CONCRETE MANHOLE WITH 4'-0" STACK	PLATE NO. 4-10	STD. NO. DPW-16

NOTES:

1. Concrete to be Class A-4.
2. All reinforcing steel to meet the current requirements of ASTM Spec. A-615.
3. Manhole sections to meet the current requirements of ASTM Spec. C-478.
4. Tapered joint with O-Ring Gasket, or single offset joint with rubber gasket, to meet current requirements of ASTM Spec. C-443.
5. Doghouse opening may only be used when placing a new MH over an existing line; otherwise, the opening must be cast. Size, location & angle of entry shall be as required by the plans.
6. MH section to be cast in the base a min. of 2".
7. Joint configuration may be cast bell-up or spigot-up.
8. Holes in precast units are to be 4" min. 8" max. larger than the outside dia. of the proposed pipe.
9. Base section to provide min. 6" clearance between top of pipe opening and bottom of bell and spigot joint.

CHART "A"

MIN. DIMENSIONS (in.)			
MH	4'-0"	5'-0"	6'-0"
A	48"	60"	72"
B	58"	72"	86"
C	5"	6"	7"
D	6"	8"	10"

Dimensions of D shall be taken from bottom of key (see drawing below)

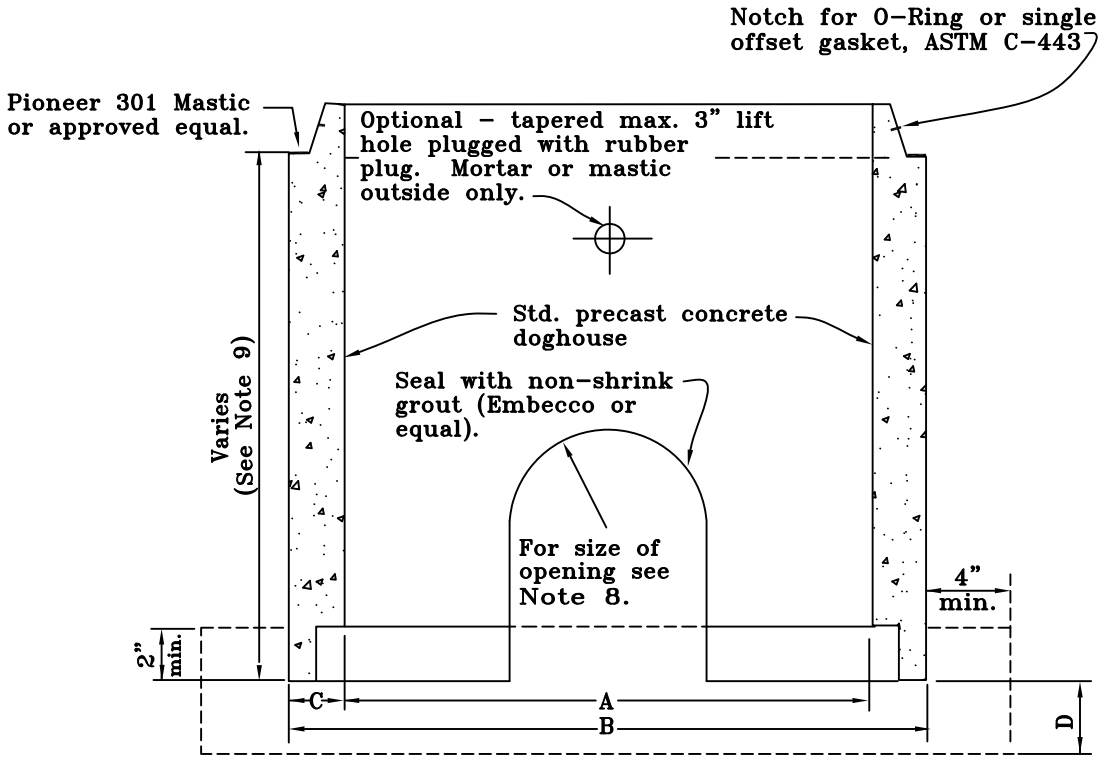

Ref. Sec. 10-0102.5D(7)	PRECAST CONCRETE MANHOLE DOGHOUSE BASE	PLATE NO.	STD. NO.
Rev. 1-00, 4-13		5-10	DPW-17

SECTION A–A

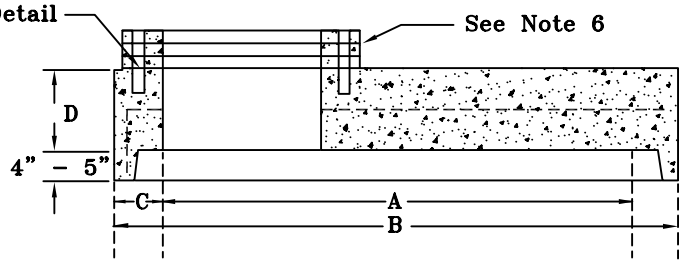

MANHOLE SIZE (in.)			
	4'–0"	5'–0"	6'–0"
A	48"	60"	72"
B	58"	72"	86"
C	5"	6"	7"
D	6"	8"	8"

NOTES:

1. Concrete to be Class A–4.
2. All reinforcing steel to meet current requirements of ASTM Spec. A–615.
3. Manhole sections to meet current requirements of ASTM Spec. C–478.
4. Flat tops shall be used only when specifically required on the plans, or where there is a height or invert conflict, as determined by the contractor or the precast manufacturer, and approved by the inspector.
5. Joint configuration may be cast bell–up or spigot–up.
6. A max. adjustment of 12" on a manhole flat top is allowed.

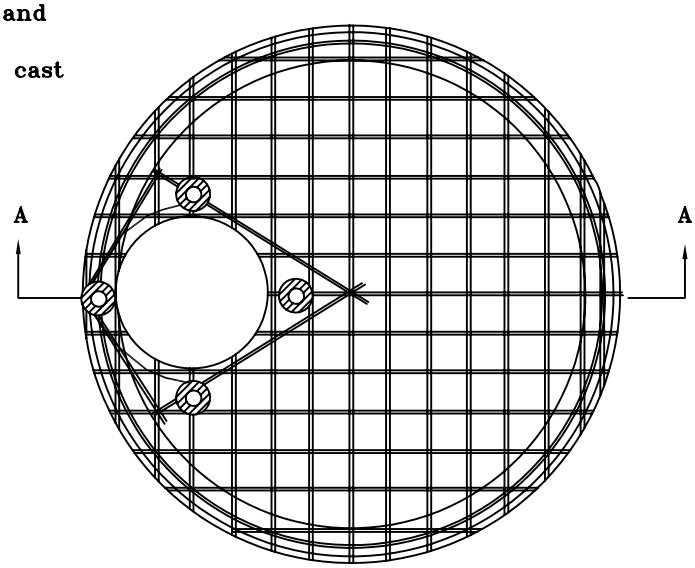

TOP VIEW

Ref. Sec. 10–0102.5D(7), Plate 4–10 Rev. 1–00. 2011 Reprint	PRECAST CONCRETE MANHOLE FLAT TOP	PLATE NO.	STD. NO.
		6–10	DPW–18

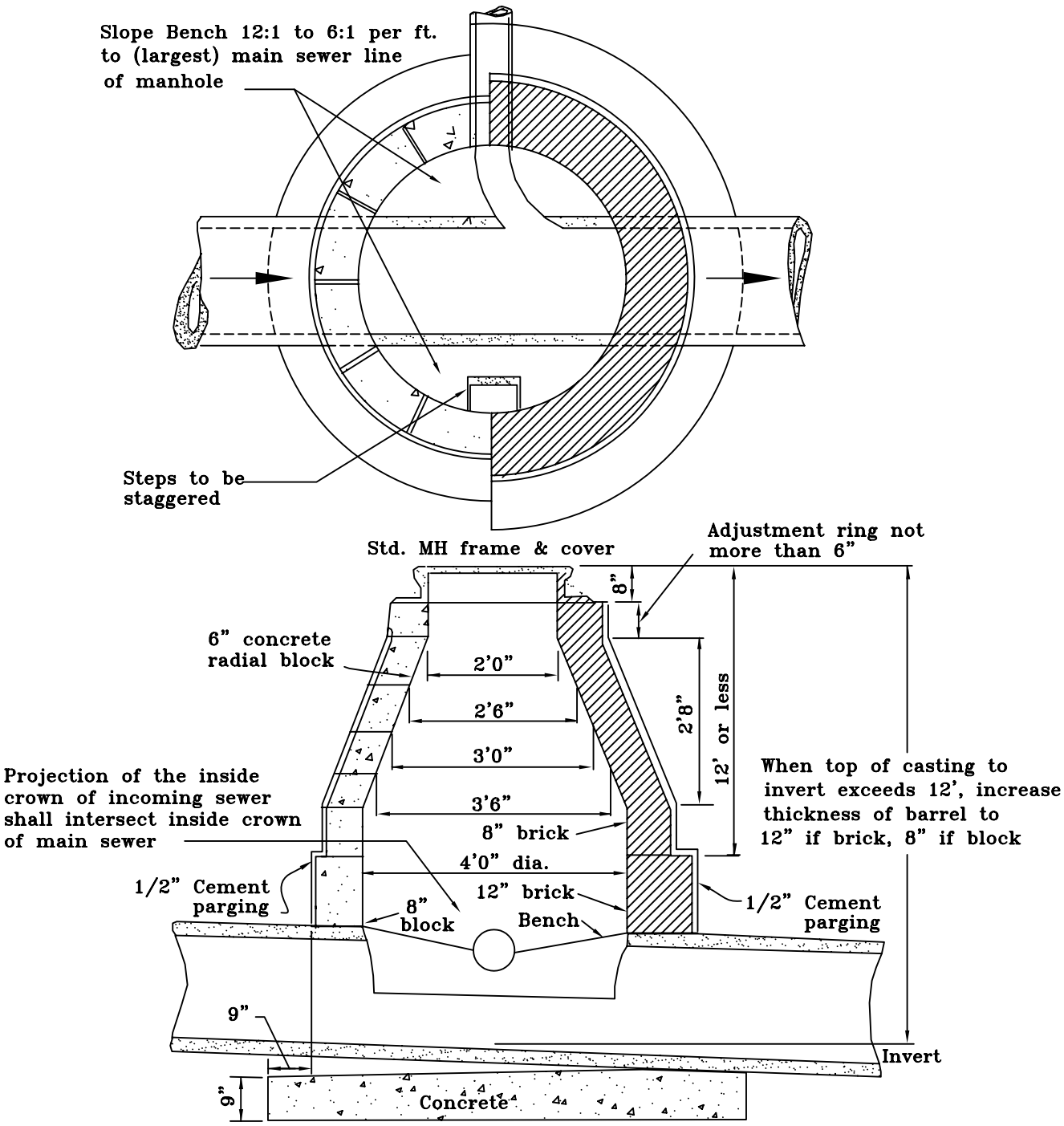

Note: For detail of MH frame and cover anchorage see Plate 10-10.

Ref. Sec. 10-0102.5D(7)	TYPICAL ALTERNATE 4'-0" ID BLOCK OR BRICK MANHOLE FOR EXISTING PIPES OF 21" MAXIMUM	PLATE NO.	STD. NO.
Rev. 1-00		7-10	DPW-20A

Material:
Gray iron

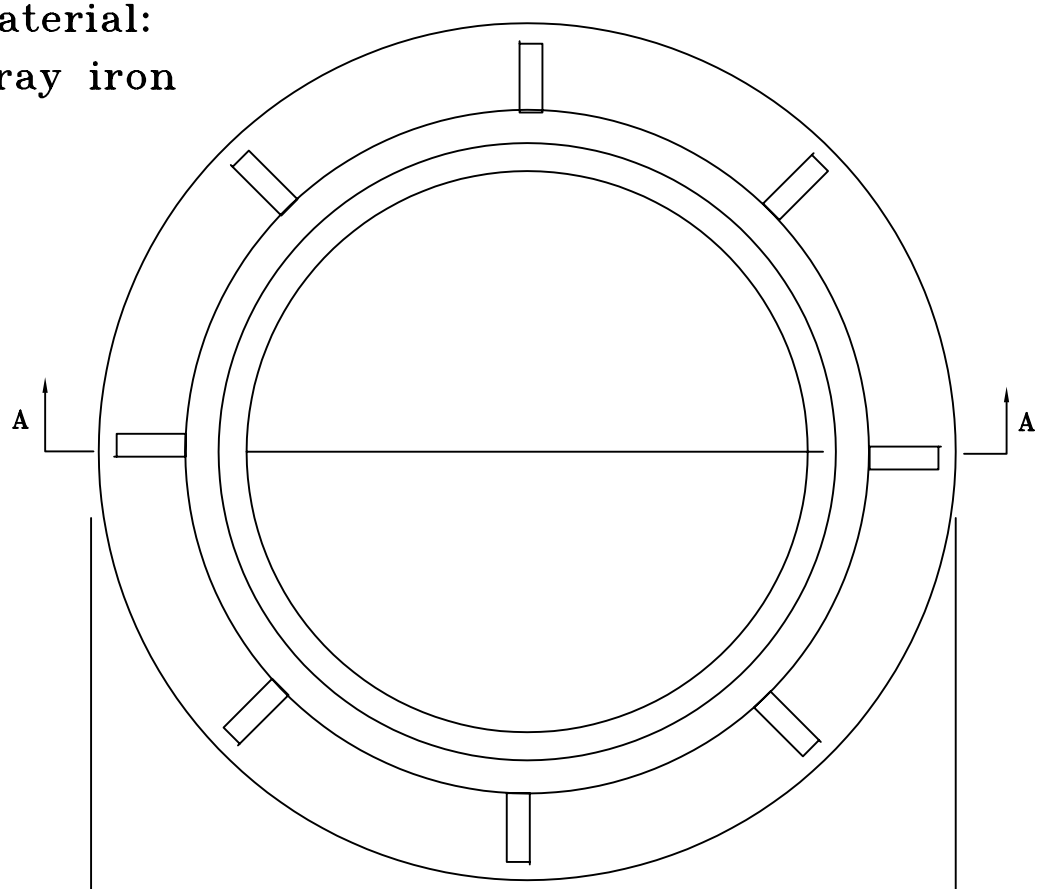

PLAN VIEW

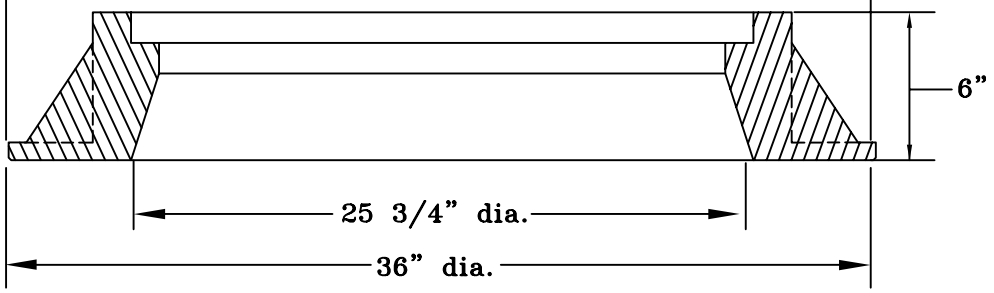

SECTION A–A

Ref. Sec. 10–0102.5D(7) Ref. Plate 4–10 Rev. 1–00	STANDARD ROADWAY FRAME	PLATE NO. 8–10	STD. NO. DPW–21

Material:
Gray iron

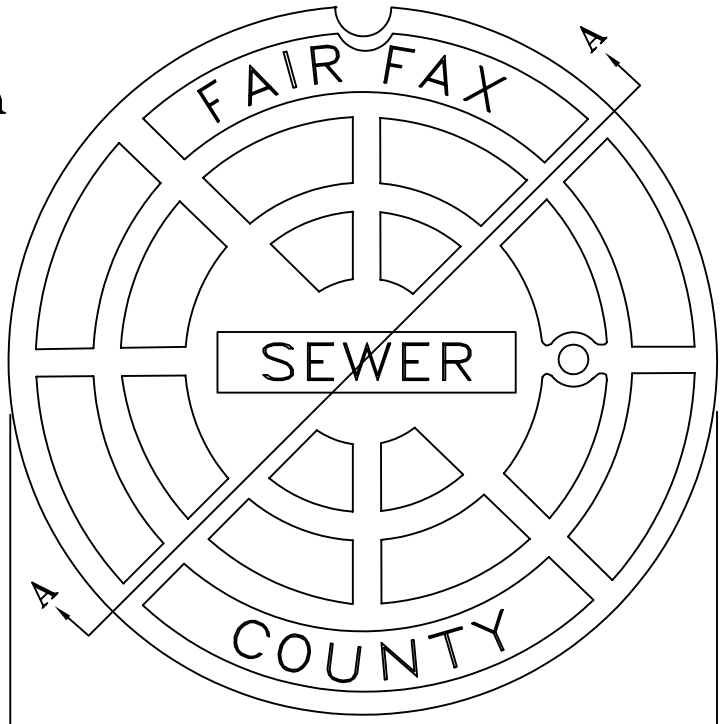

PLAN VIEW

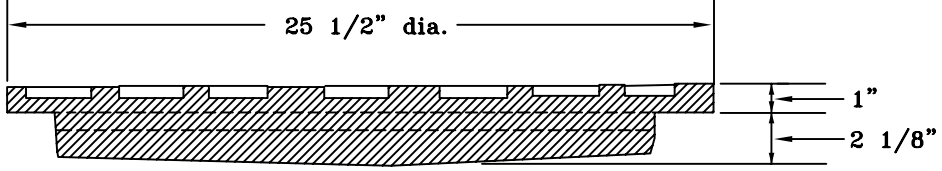

SECTION A–A

Ref. Sec. 10-0102.5D(7) Ref. Plate 4-10 Rev. 1-00	STANDARD ROADWAY MANHOLE COVER	PLATE NO.	STD. NO.
		9-10	DPW-21A

Material:
Gray iron

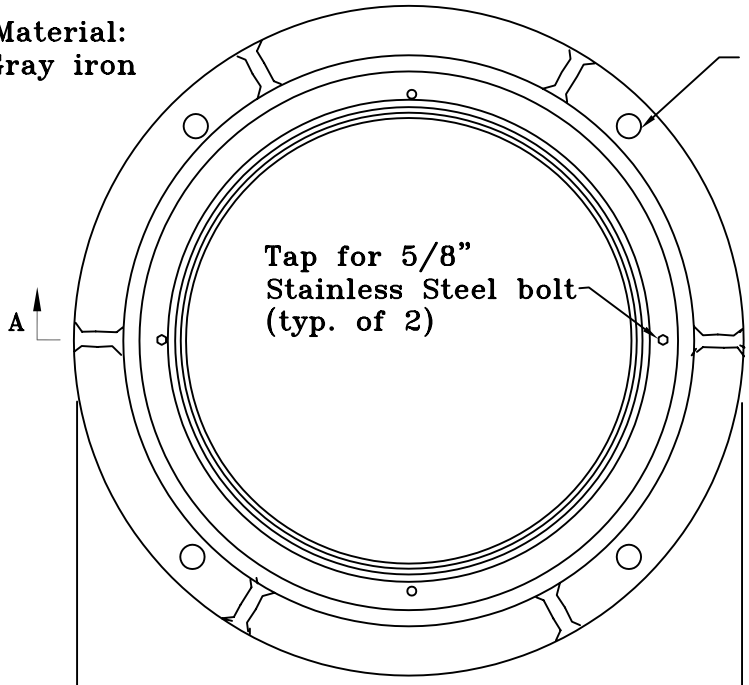

PLAN VIEW

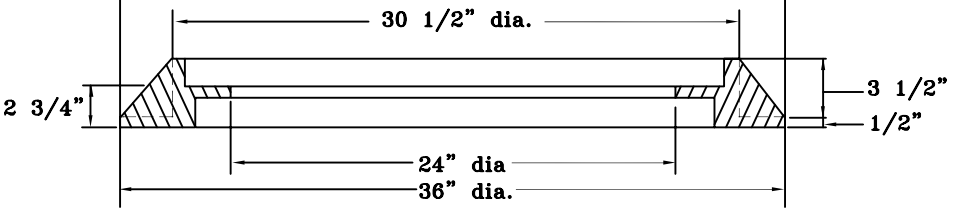

SECTION A–A

ANCHOR BOLT DETAIL
(SEE NOTE)

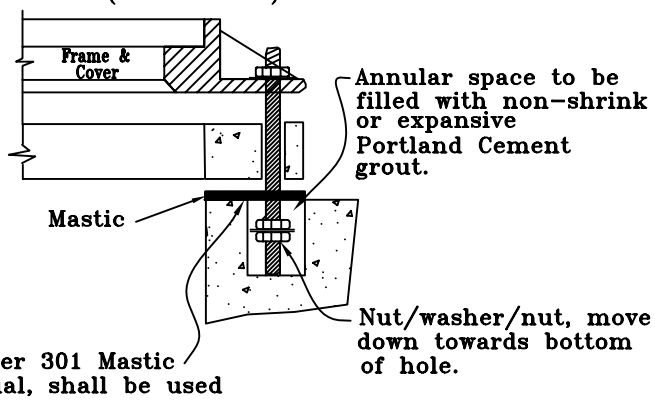

NOTE:

3/4" dia. threaded anchor bolt or 3/4" dia. variable length allthread with 2" dia. washer locked between 2 nuts at embedded end, or 3/4" dia. variable length allthread with 3" long X 1/2" (min.) dia. "T" welded on the embedded end. Anchor bolt to be embedded in nonshrink or expansive Portland Cement grout.

Ref. Sec. 10–0102.5D(7), Plates 3–10, 4–10, 6–10, 7–10	WATERTIGHT/LOCKING MANHOLE FRAME	PLATE NO.	STD. NO.
Rev. 1–00, 2011 Reprint		10–10	DPW–22

Material:
Gray iron

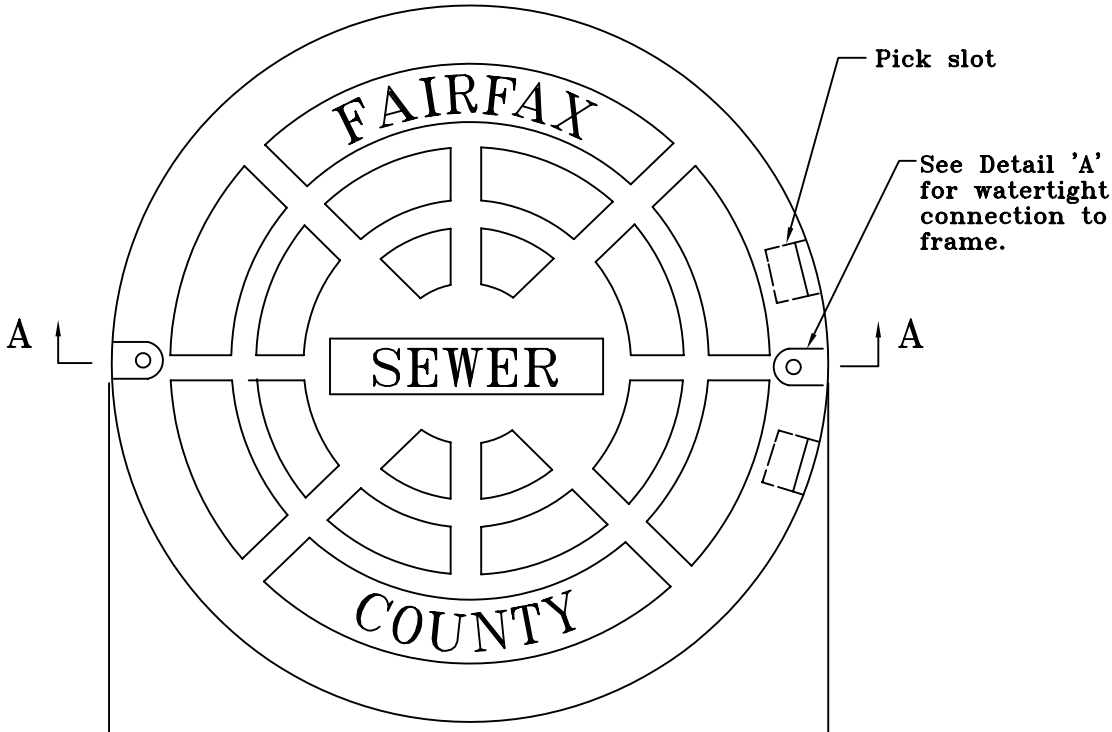

PLAN VIEW

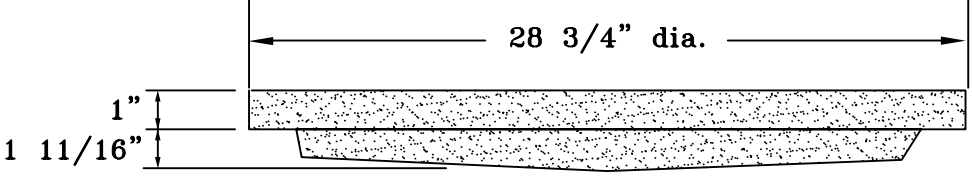

SECTION A–A

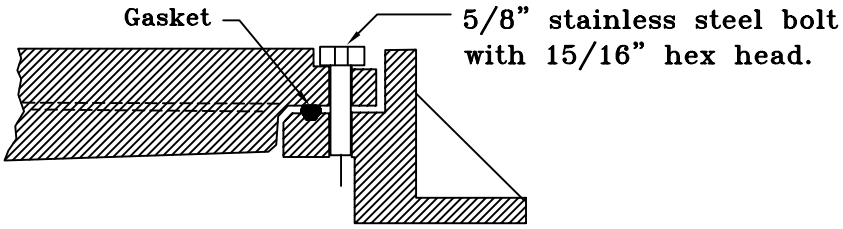

DETAIL 'A'

Ref. Sec. 10–0102.5D(7), Plate 4–10 Rev. 1–00, 2011 Reprint	WATERTIGHT MANHOLE COVER	PLATE NO.	STD. NO.
		11–10	DPW–23

Material
Gray Iron

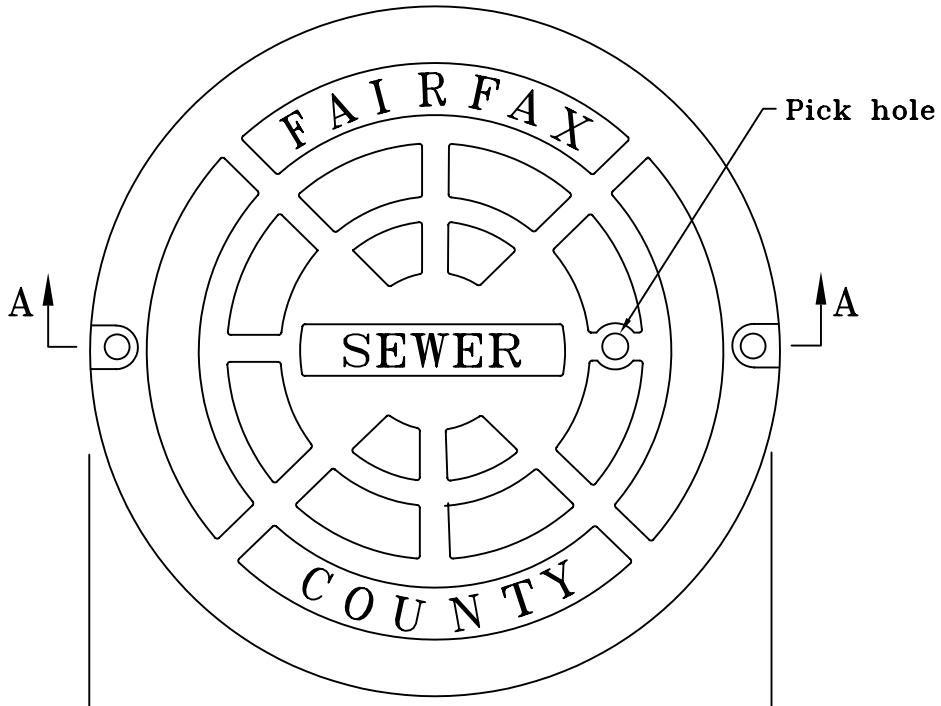

PLAN VIEW

28 3/4" dia.

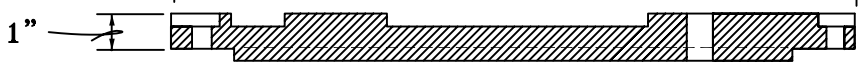

SECTION A–A

Ref. Sec. 10–0102.5D(7)	BOLTED MANHOLE COVER	PLATE NO.	STD. NO.
Rev. 1–00, 2011 Reprint		13–10	

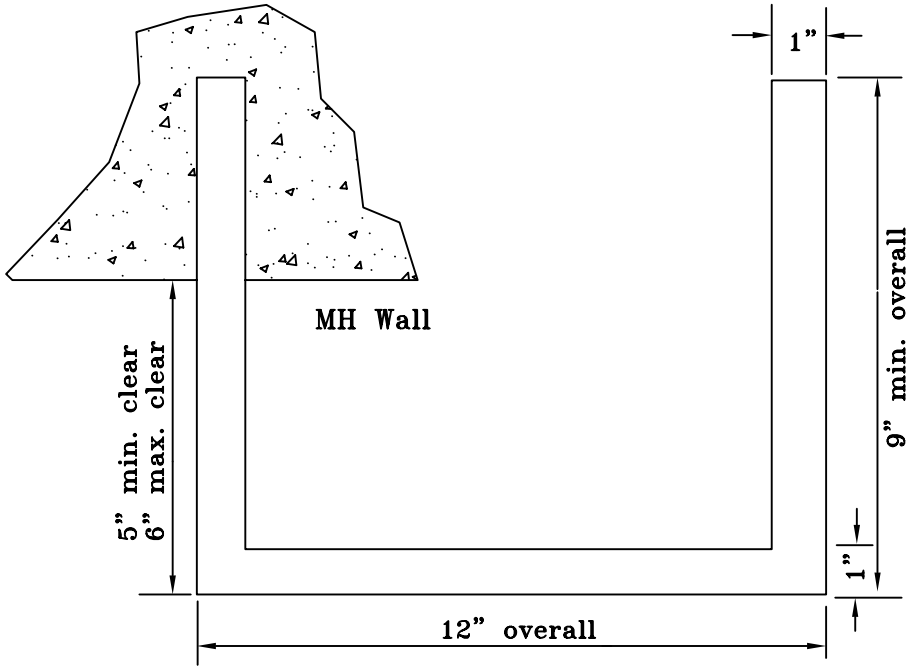

Approved MH step manufacturers:

M. A. Industries, Inc. –"Plastic Step" or Delta, Oliver Tire and Rubber Company Wedge-Lok Safety Step, or approved equal.

Steps must be steel with plastic or rubber coating unless otherwise specified for caustic service.

Ref. Sec. 10-0102.5D(7) Ref. Plate 3-10, 4-10, Rev. 1-00, 2011 Reprint	MANHOLE STEP DETAIL	PLATE NO.	STD. NO.
		14-10	DPW-24

Top View

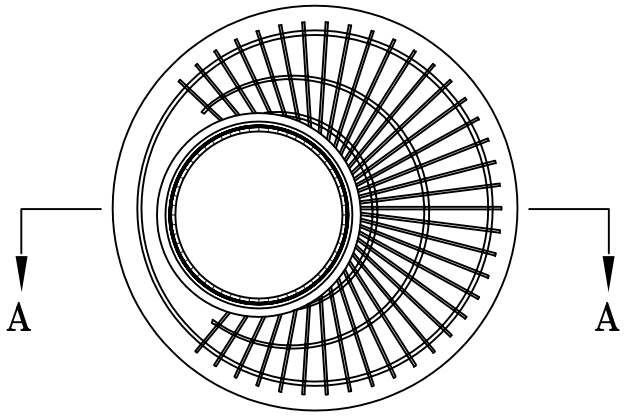

Notes:

1. Concrete to be Class A-4

2. All reinforcing steel to meet current requirements of ASTM Spec. A-615

3. Manhole sections to meet current requirements of ASTM Spec. C-478

4. Joint configuration may be cast Bell-up or Spigot-up

	Dimensions	
	5'-4'	6'-4'
A	60"	72"
B	72"	85"
C	6"	7"
D	8"	8"

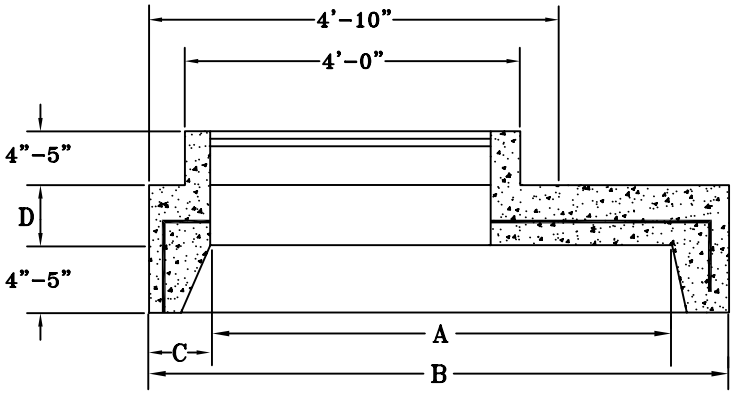

Section A-A

Ref. Sec. 10-0102.5D(7), Plate 4-10 Rev. 1-00, 2011 Reprint	PRECAST CONCRETE MANHOLE REDUCER	PLATE NO.	STD. NO.
		14A-10	DPW-19

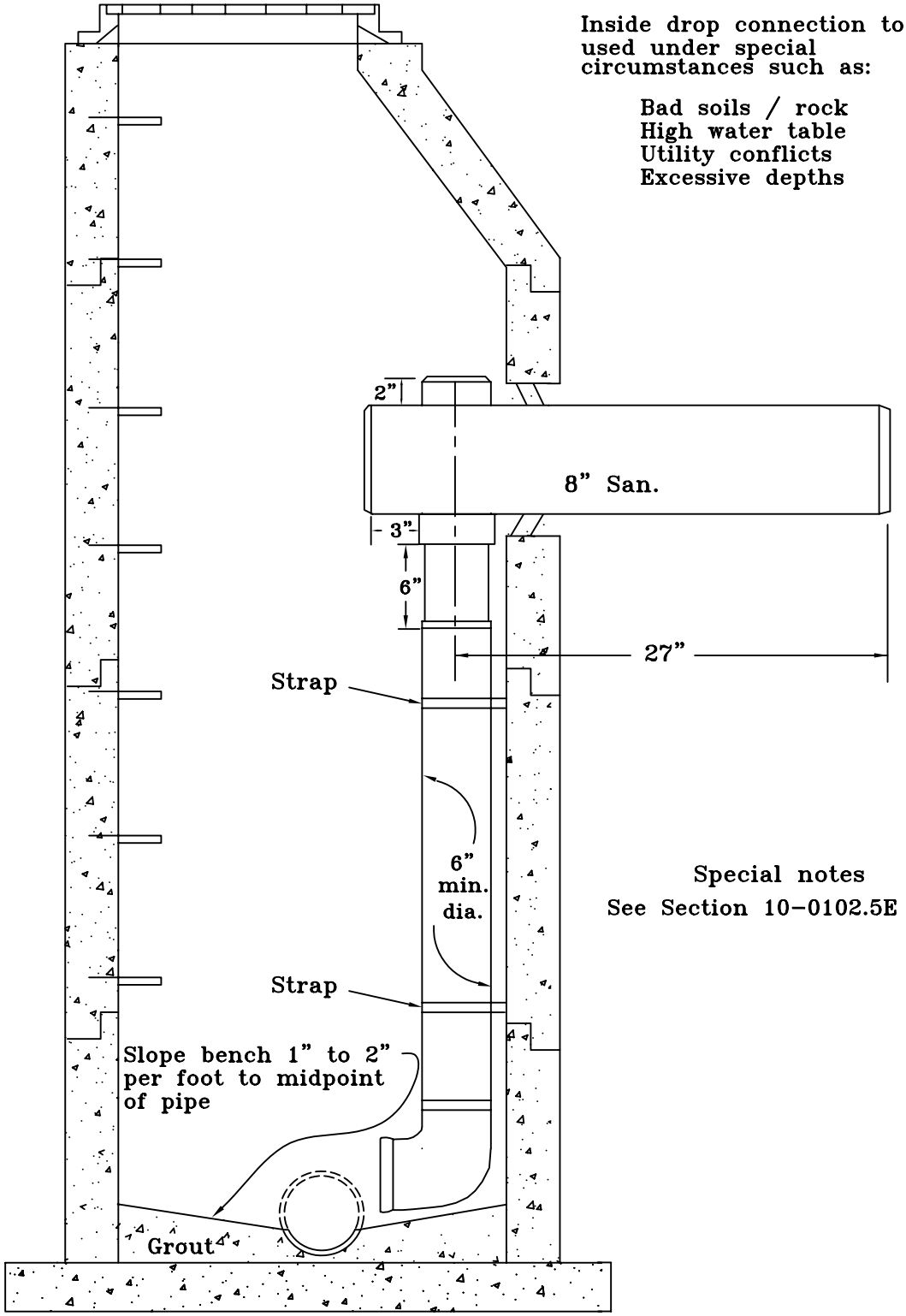

Inside drop connection to be used under special circumstances such as:

Bad soils / rock
High water table
Utility conflicts
Excessive depths

Special notes
See Section 10-0102.5E et seq.

Ref. Sec. 10-0102.5E Rev. 1-00, 2-07	TYPICAL 4' MANHOLE WITH INSIDE DROP CONNECTION	PLATE NO.	STD. NO.
		15-10	DPW-25B

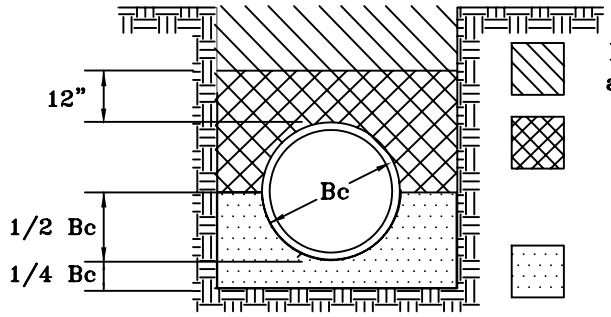

Backfill and compaction requirements in accordance with Section 10-0104.2L(13).

Select backfill - hand packed to 95% compaction in accordance with VDOT specs Sections 523.03, 302 and 303.10, max granular size 1"

Crushed stone VDOT size 57, 68, or 78 in accordance with VDOT specs Section 203. Table II-5

Ref. Sec. 6-1607.1B(2), 10-0103.7, Plate 20-10 Rev. 1-00, 2011 Reprint	TYPICAL TRENCH CONSTRUCTION PIPE BEDDING - ALTERNATE "A" (CONTRACTOR'S OPTION)	PLATE NO.	STD. NO.
		18-10	DPW-6

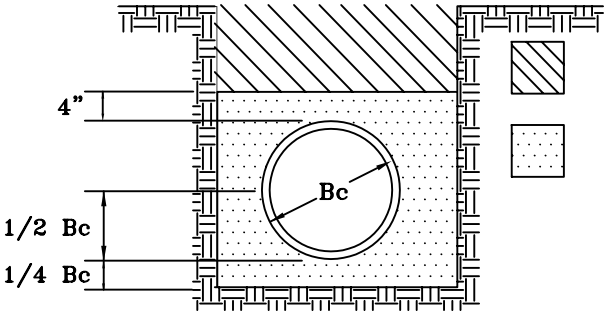

Backfill and compaction requirements in accordance with Section 10-0104.2L(13)

Crushed stone VDOT size 57, 68, or 78 in accordance with VDOT specs Section 203 Table II-5

NOTE 1: The width of the trench is to be as specified by the Engineer on the plans or as set forth in the Specs. Max. trench width and depth shall be as specified in Tables 10.4 and 10.5. Trenching methods must be in compliance with the Va. Department of Labor and Industry (VOSH) requirements.

NOTE 2: The pipe shall be bedded in carefully compacted granular material placed on a flat trench bottom. The granular material shall be crushed stone VDOT size 57, 68, or 78, in accordance with VDOT Spec. Section 203. The granular bedding shall have a min. thickness of 1/4 the outside pipe dia. (4" min.) and shall extend vertically in accordance with alternatives A or B. If the max. width of the trench at the top of the pipe exceeds those specified, granular bedding material will be brought to the top of the pipe for the full width of the trench. The remainder of the side fills and a min. depth of 12" over the top of the pipe shall be filled with carefully compacted material. Should the contractor elect to use larger stone to carry the water, the larger stone is to be placed beneath the specified amount of granular material. The larger stone is not in any way to affect the amount of granular material to be used.

Ref. Sec. 6-1607.1B(2), 10-0103.7, 10-0104.2L(13), Plates 20-10, 23-10, 24-10 Rev. 1-00, 2011 Reprint	TYPICAL TRENCH CONSTRUCTION PIPE BEDDING - ALTERNATE "B" (CONTRACTOR'S OPTION)	PLATE NO.	STD. NO.
		19-10	DPW-6

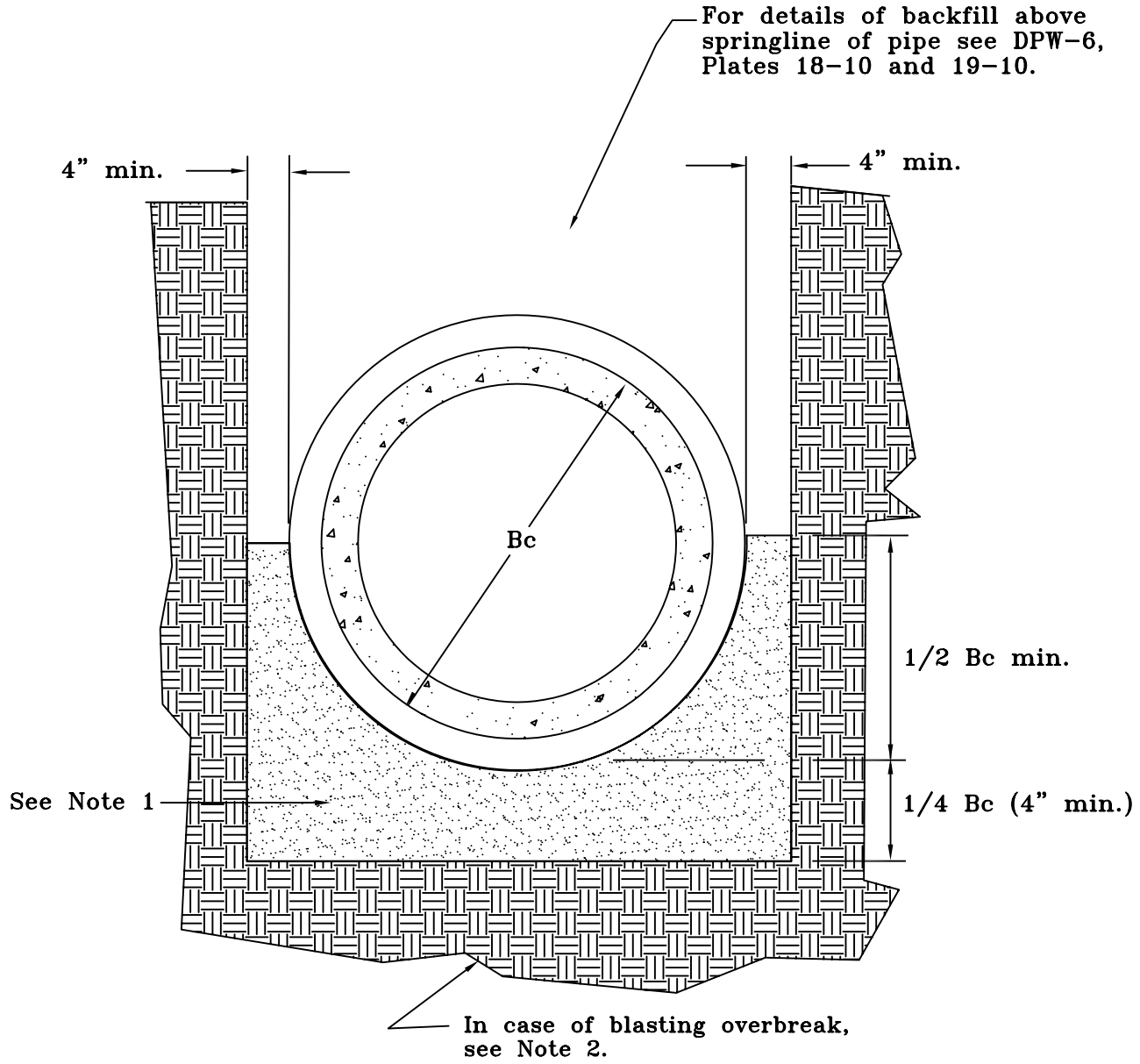

NOTES:

1. The compacted crushed stone is to be as described in Plates 18-10 and 19-10 of the specs.

2. Blasting overbreak to be removed and replaced with compacted crushed stone.

Ref. Sec. 10-0103.7	TYPICAL TRENCH IN ROCK	PLATE NO.	STD. NO.
Rev. 1-00, 2011 Reprint		20-10	DPW-7

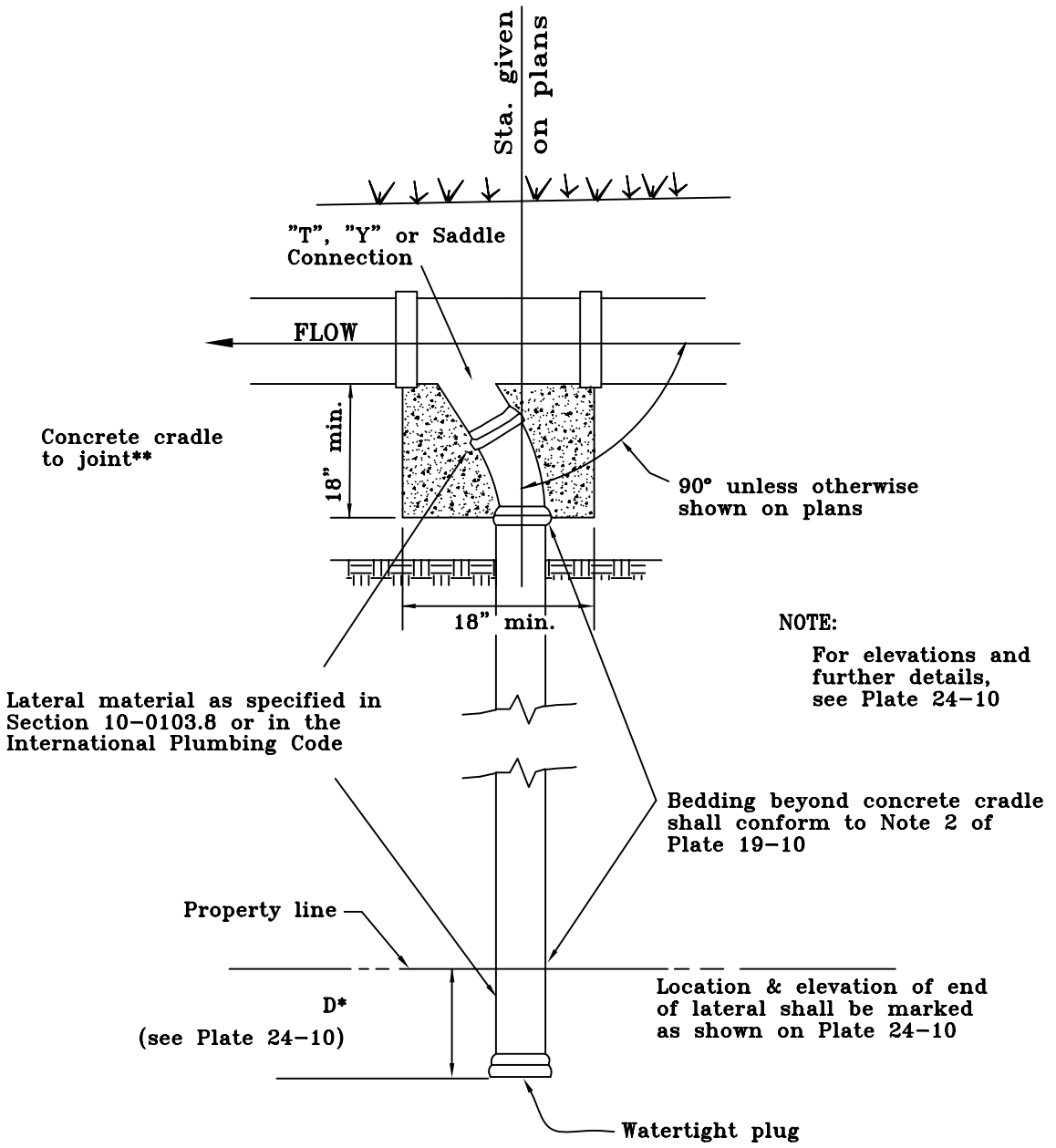

5" dia. laterals shall connect to 8" dia. sewer mains by way of a manufactured "T' or "Y". 6" dia. laterals shall connect to collector sewers in sizes from 8" to 15" by way of a manufactured "Y" only with prior approval from the Department of Public Works and Environmental Services. Lateral connections to sewers greater than 15" in diameter shall be made at manholes. Approved saddles may be used for 5" dia. connections for 8" dia. rigid pipe sewer mains.

*Not applicable to Planned Development Districts

**Hand mixing allowed per VDOT specifications

Ref. Sec. 10-0104.5A, Plate 24-10	HOUSE LATERAL (SPUR)	PLATE NO.	STD. NO.
Rev. 1-00, 6-01, 2011 Reprint		23-10	DPW-10

TO AVOID CONFLICTS WITH OTHER UNDERGROUND SERVICE UTILITIES, THE MINIMUM LATERAL EXTENSION DISTANCE (D)* SHALL BE:

Single-Family Detached	20 ft beyond the property line or within 5 ft of the minimum yard requirement, whichever distance is less.
Single-Family Townhouse	5 ft beyond the property line or sanitary sewer easement, whichever distance is greater.

NOTES:

1. Gravel bedding beyond the concrete cradle shall conform to Note 2 of Plate 19-10.
2. Lateral pipe material shall be as specified in Section 10-0103.8 or in the International Plumbing Code.
3. CI Saddles shall be as made by Richmond Foundry, Pioneer Foundry, or approved equal.
4. A long sweep, 90-degree bend may be used as an alternate to two 45-degree bends.

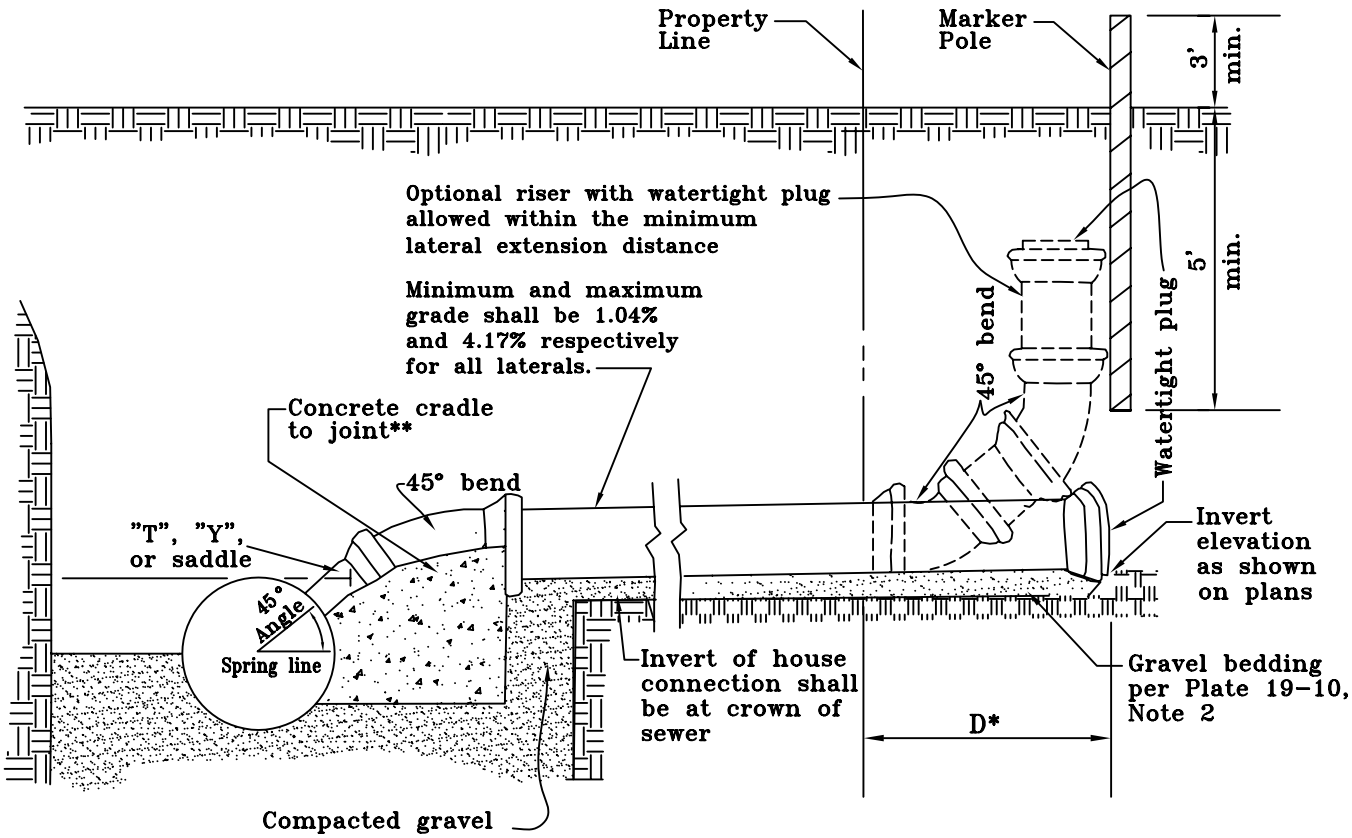

FOR PLAN VIEW, SEE PLATE 23-10

*Not applicable to Planned Development Districts

**Hand mixing allowed per VDOT specifications

Ref. Sec. 10-0104.5A, Plate 23-10	HOUSE LATERAL CONSTRUCTION DETAIL	PLATE NO.	STD. NO.
Rev. 1-00, 6-01, 2011 Reprint		24-10	DPW-11

HOLE IN PIPE ABOVE SPRING LINE

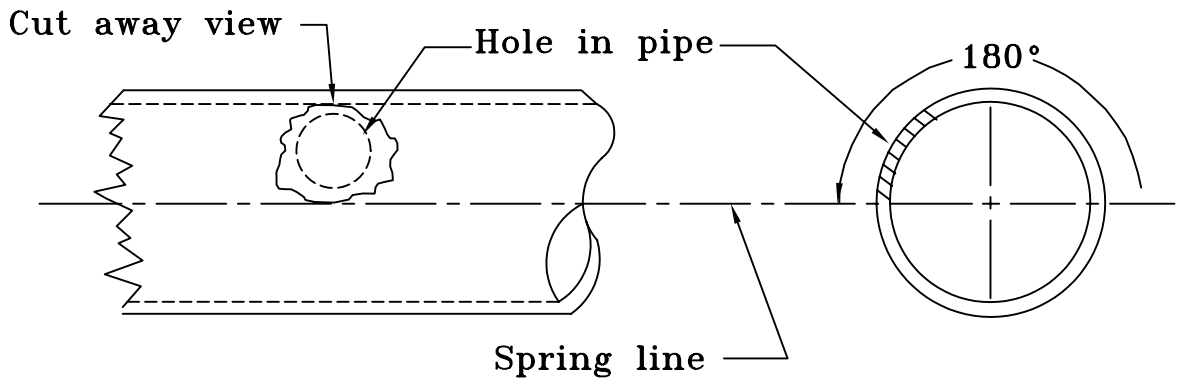

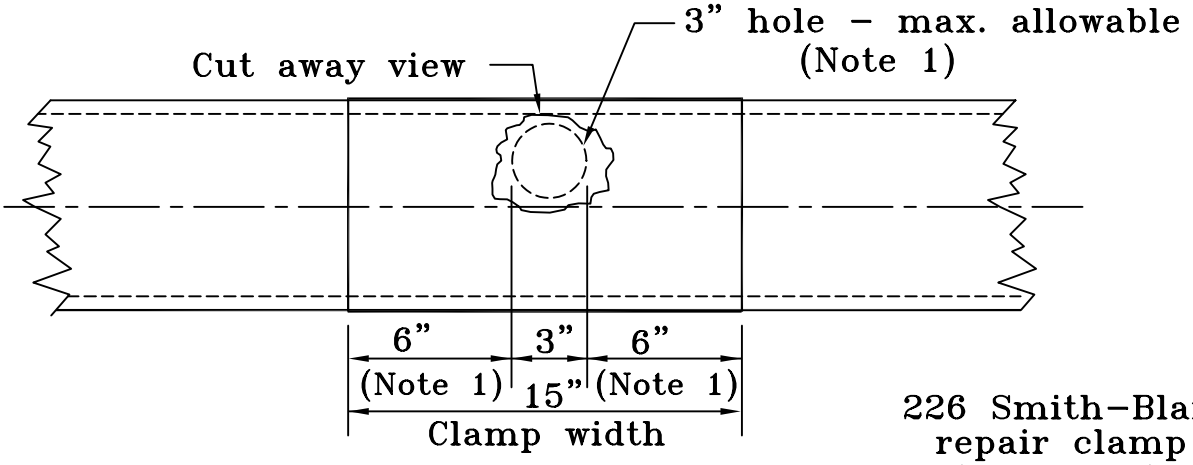

226 Smith–Blair repair clamp (or equal)

Note 1:

Damage exceeding 3" shall be repaired as stated under replacement of pipe–see Section 10–0104.7C et seq.

6" – min. dimension from extremity of damaged area to end of sleeve.

Ref. Sec. 10–0104.7E(1)	HOLE IN PIPE ABOVE SPRINGLINE	PLATE NO.	STD. NO.
Rev. 1–00		25–10	RG–1

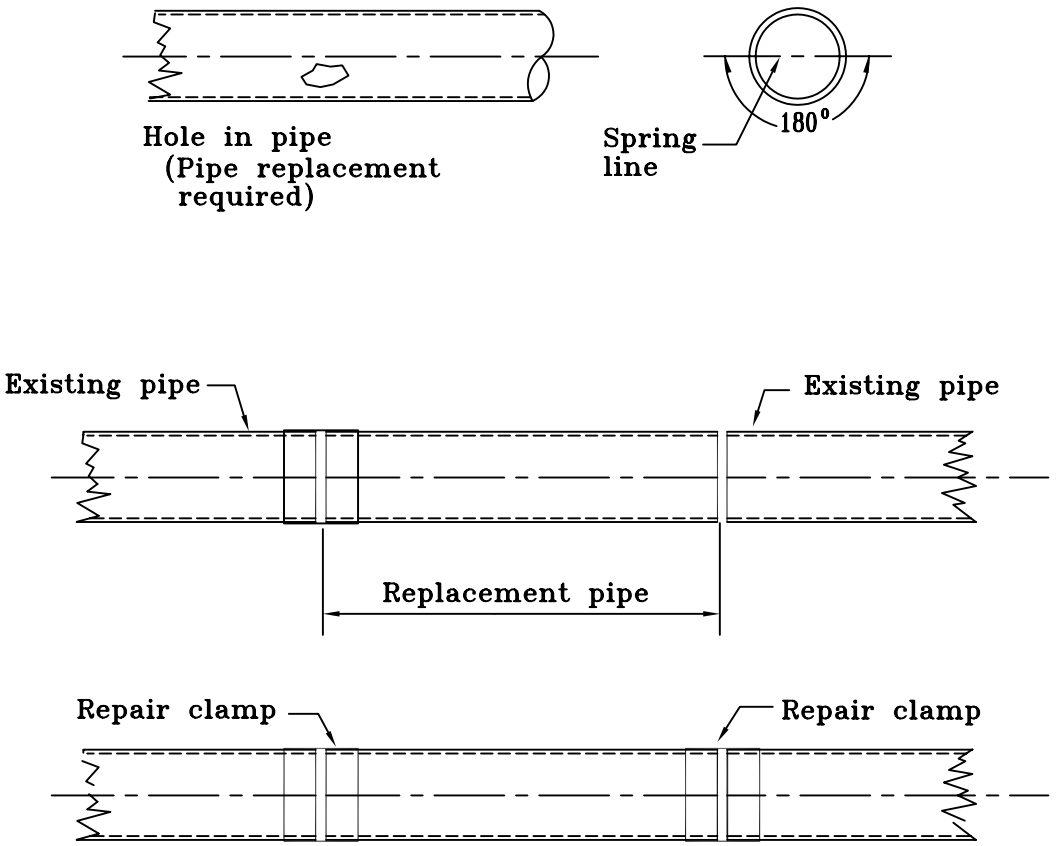

Ref. Sec. 10-0104.7E(2)	HOLE IN PIPE BELOW SPRING LINE	PLATE NO.	STD. NO.
Rev. 1-00		26-10	RG-2

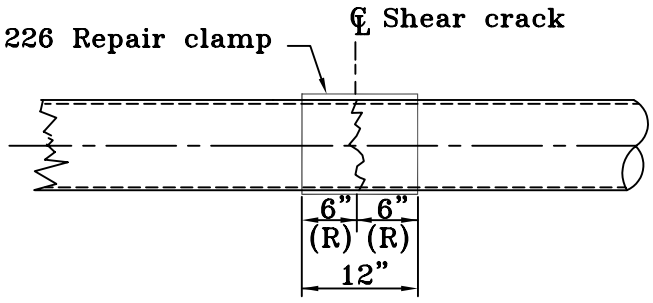

Ref. Sec. 10-0104.7E(3)	PIPE WITH CRACK OR SHEAR	PLATE NO.	STD. NO.
Rev. 1-00		27-10	RG-2

CRUSHED SECTION OR SECTIONS OF PIPE

AREA OF CUT

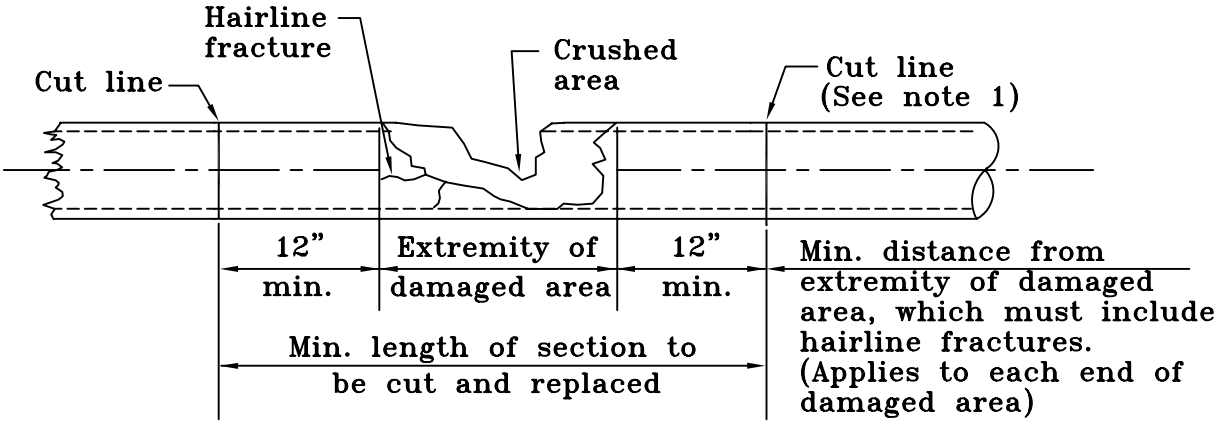

Note 1 – Cuts will be made on a vertical plane with an approved cutting tool. After the cut has been made, a visual inspection will be made to check for hairline fractures on the inside of pipe; additional pipe will be cut out if this condition is found.

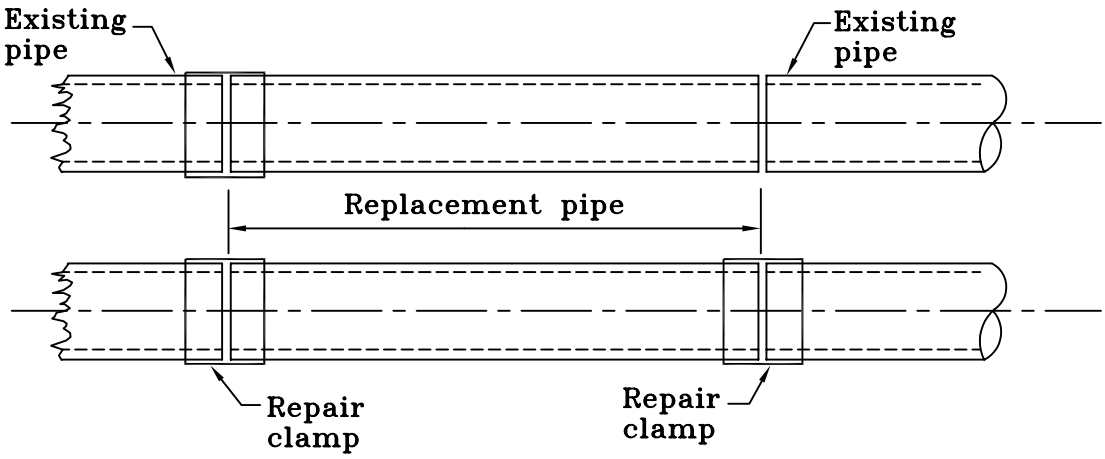

SLIPPED OR LEAKING JOINTS

Ref. Sec. 10-0104.7E(4), 10-0104.7E(5)	CRUSHED SECTION OF PIPE AND SLIPPED OR LEAKING JOINT	PLATE NO.	STD. NO.
Rev. 1-00		28-10	RG-3

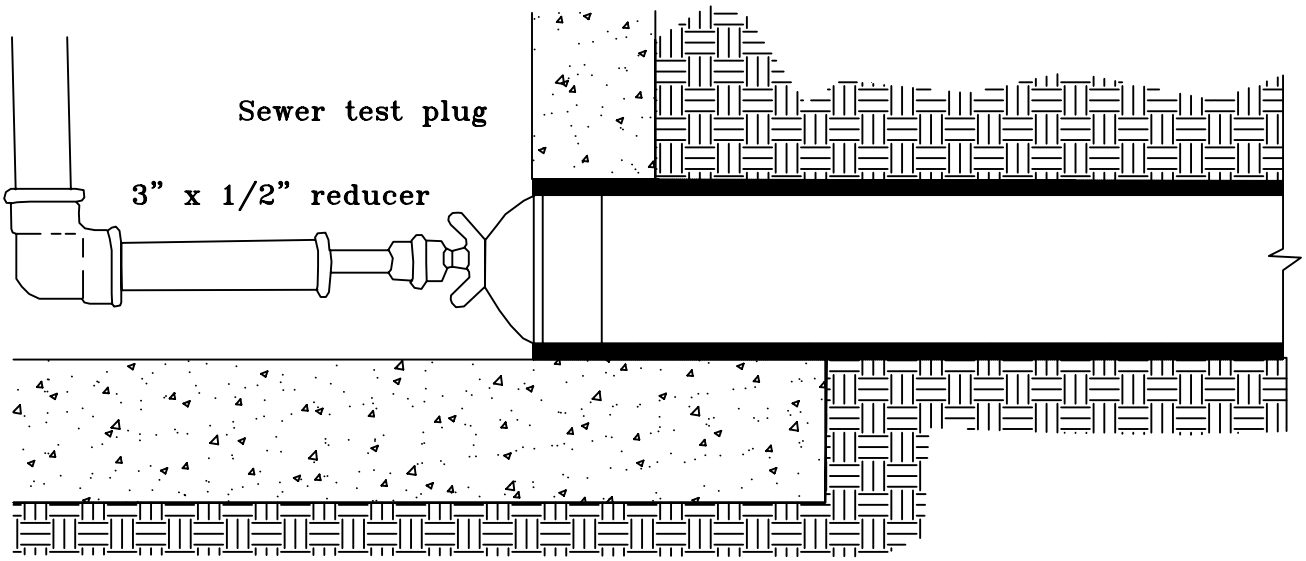

Ref. Sec. 10-0105.5B Rev. 1-00	SEWER TEST PLUG	PLATE NO.	STD. NO.
		29-10	

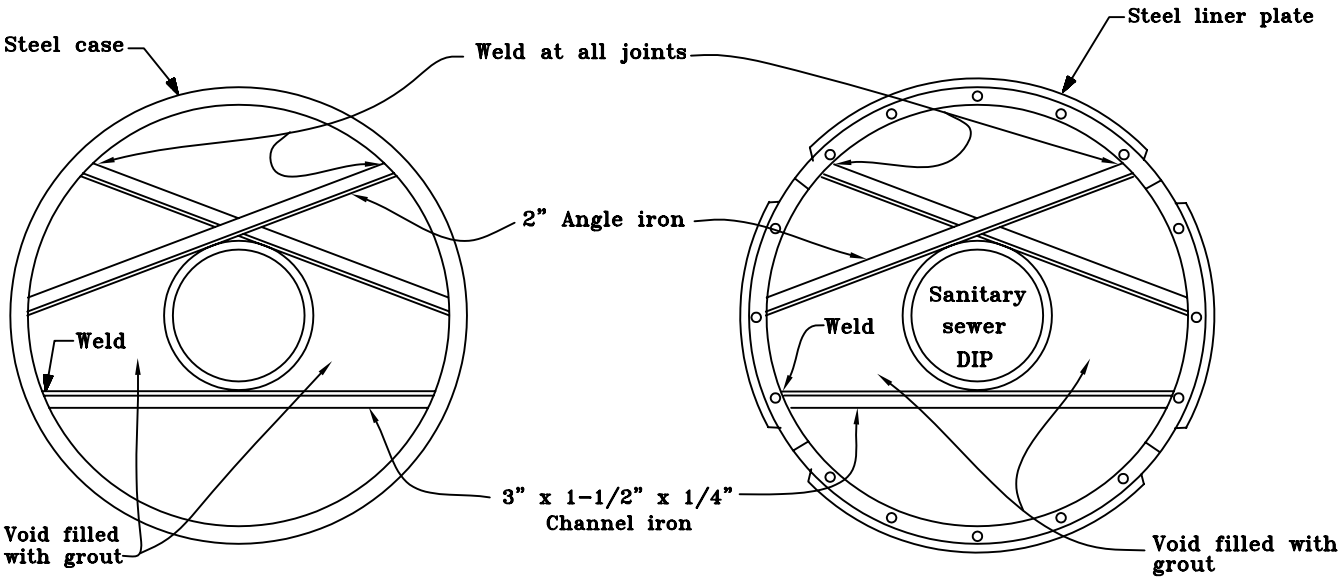

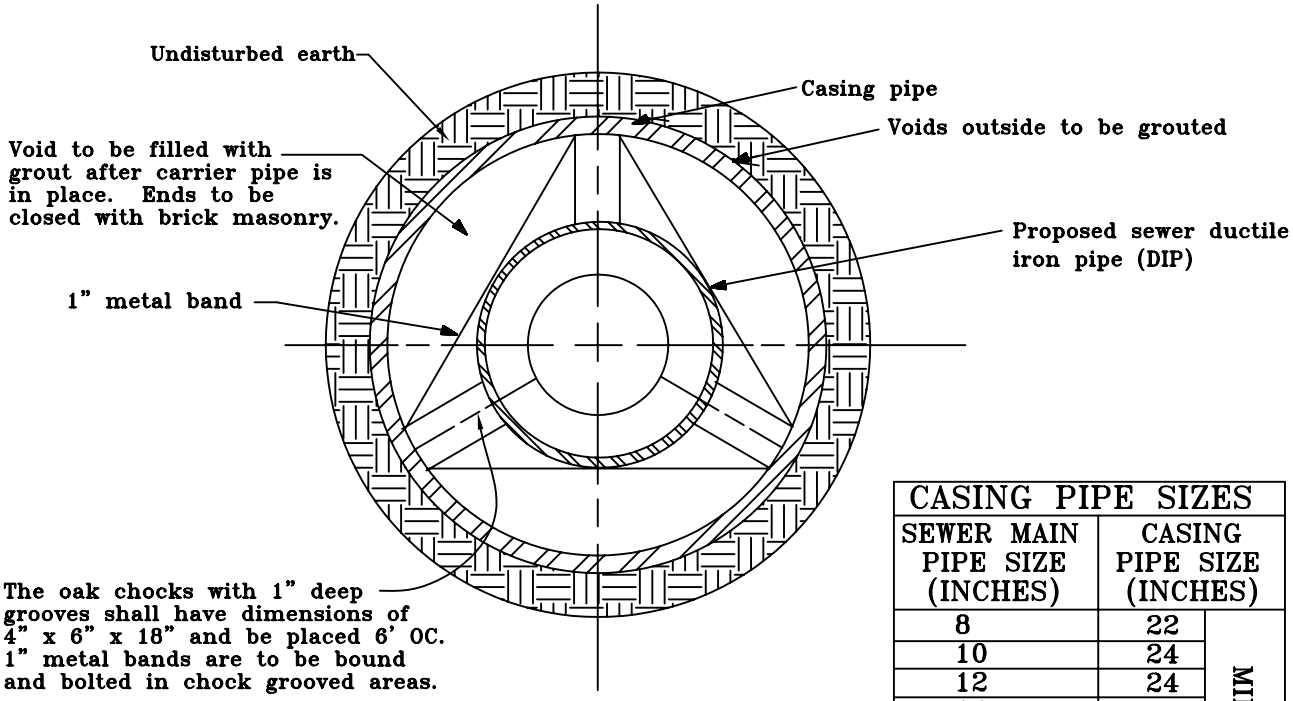

CASING PIPE SIZES		
SEWER MAIN PIPE SIZE (INCHES)	CASING PIPE SIZE (INCHES)	
8	22	MINIMUM
10	24	
12	24	
14	30	
16	30	
18	36	
20	36	
24	36	

All tunnel ends to be closed with brick and mortar construction.

Grout Specifications

One part cement and four parts concrete sand to which has been added "Passolite" or fly ash in the amount of 1/2 pound per bag of cement.

Casing pipe size varies, 8 gauge galvanized asphalt, coated corrugated metal culvert pipe AASHTO STD. M36 or black seamless steel welded (AWWA C-200) pipe minimum thickness 3/8".

HIGHWAY CROSSING

		PLATE NO.	STD. NO.
Rev. 1-00	JACKING AND BORING/ TUNNEL DETAILS	30-10	DWP-12

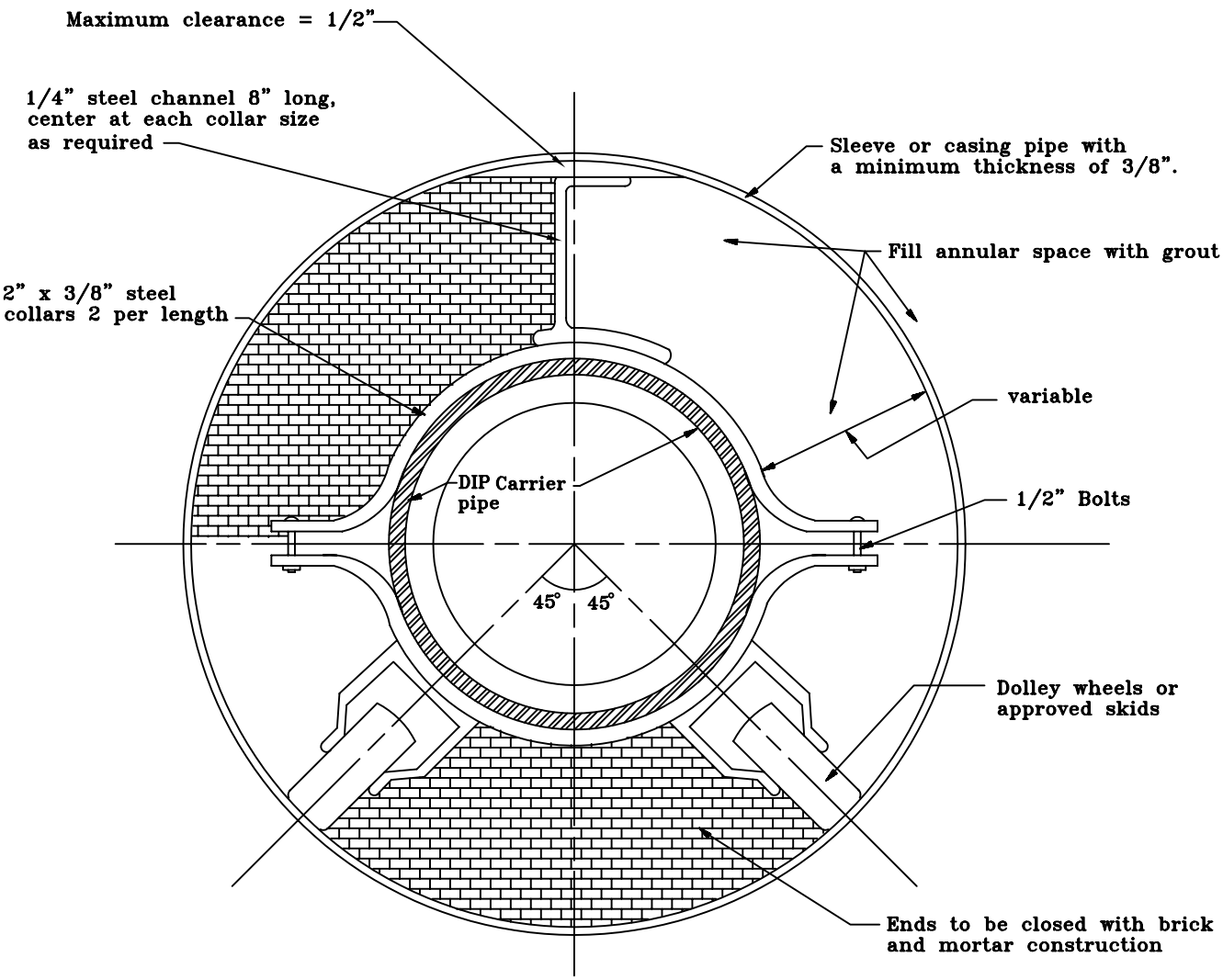

CASING PIPE SIZES		
SEWER MAIN PIPE SIZE (INCHES)	CASING PIPE SIZE (INCHES)	
8	22	MINIMUM
10	24	
12	24	
14	30	
16	30	

Grout Specifications

One part cement and four parts concrete sand to which has been added "Passolite" or fly ash in the amount of 1/2 pound per bag of cement.

HIGHWAY CROSSING

		PLATE NO.	STD. NO.
Rev. 1-00	JACKING AND BORING/ TUNNEL DETAILS	31-10	DPW-13

FAIRFAX COUNTY PUBLIC FACILITIES MANUAL

CASING PIPE SIZE (ID)	
CARRIER PIPE (In)	MINIMUM REQUIRED CASING SIZE (In)
8	16
10	21
12	24
16	24
18	30
21	30
24	36
30	42
36	48

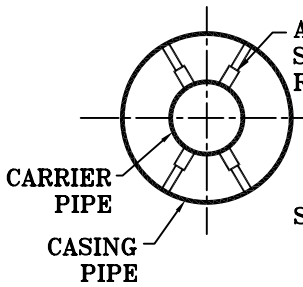

PIPE IN CASING
END VIEW

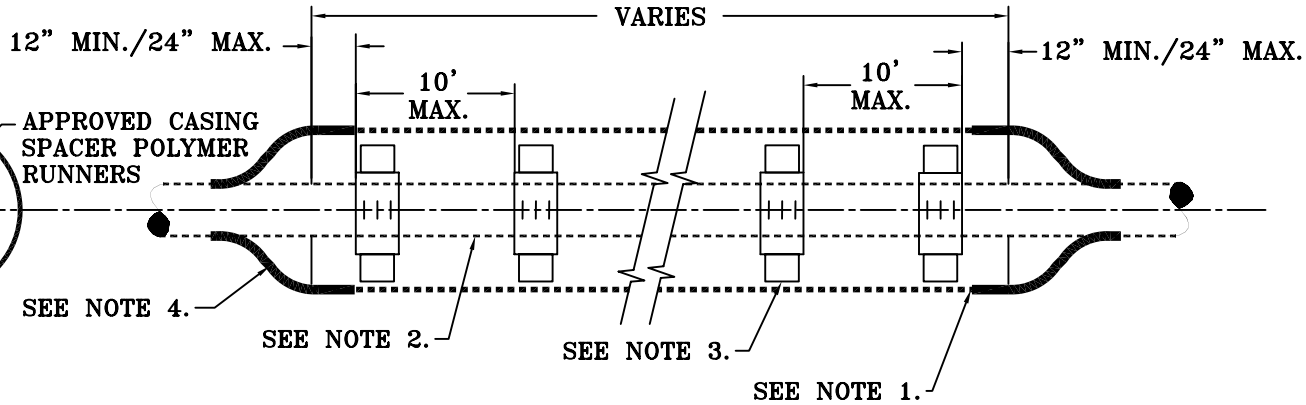

STEEL CASING PIPE DETAIL
NO SCALE

NOTES:

1. Casing pipe shall be smooth wall carbon steel pipe, joints shall be squared and continuously welded.
   Wall thickness: 42" ID and greater – .5"
   36" ID and less – 0.375"
2. Carrier pipe shall be ductile iron.
3. Casing spacers shall be carbon steel with polyvinyl chloride coating as manufactured by PSI or stainless steel as manufactured by Cascade Waterworks Inc. or approved equal. Runner width shall be a minimum of 2".
4. End closures: Casing end seals shall be pull–on type molded from synthetic rubber or approved equal. Seals shall be attached to casing pipe by band clamps. Band clamps shall be type 304 stainless steel. Seals shall have molded seats for proper location of bands.

STD. NO.	DPW–14
PLATE NO.	32–10

STEEL CASING PIPE/
TUNNEL DETAIL

Rev. 9–01

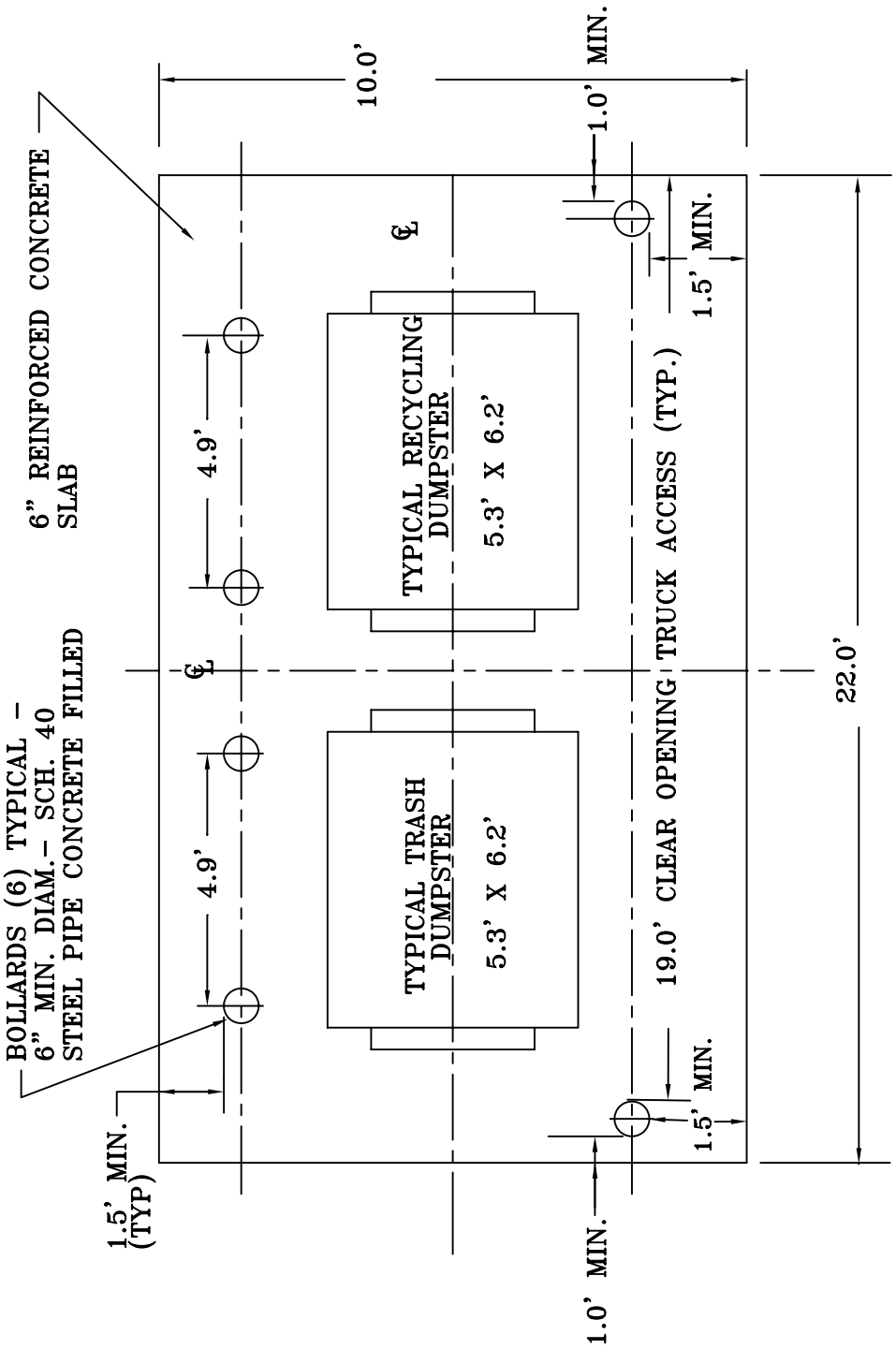

Ref. Sec. 10-0306.6	TYPICAL TRASH AND RECYCLING PAD	PLATE NO.	STD. NO.
Rev. 4-08, 2011 Reprint		33-10	DPW-15