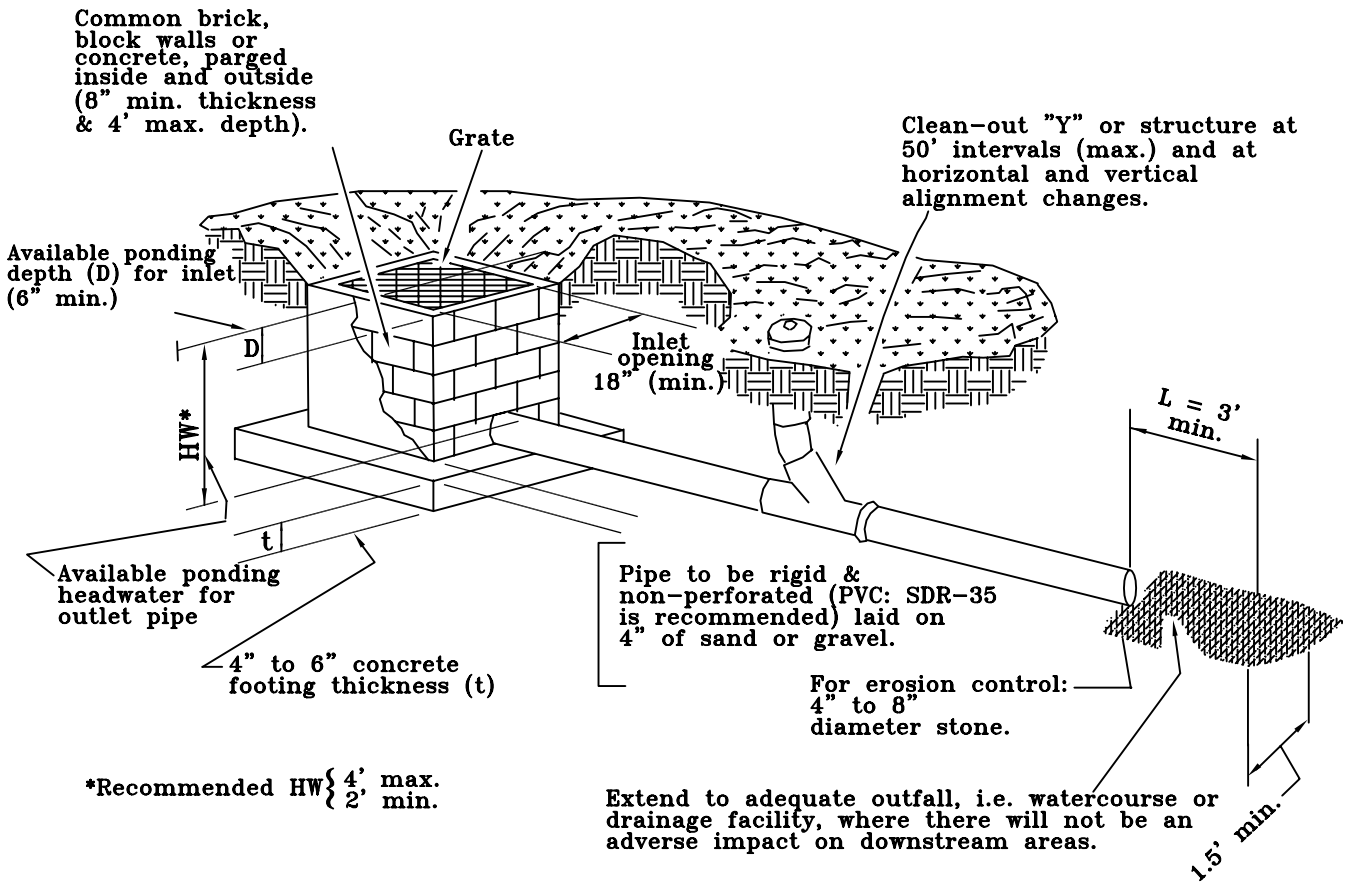

Ref. 6-0205, 6-0202.8 Rev. 1-00, 2-06, 2011 Reprint	SMALL PRIVATE DRAINAGE SYSTEM	PLATE NO.	STD. NO.
		1-6	

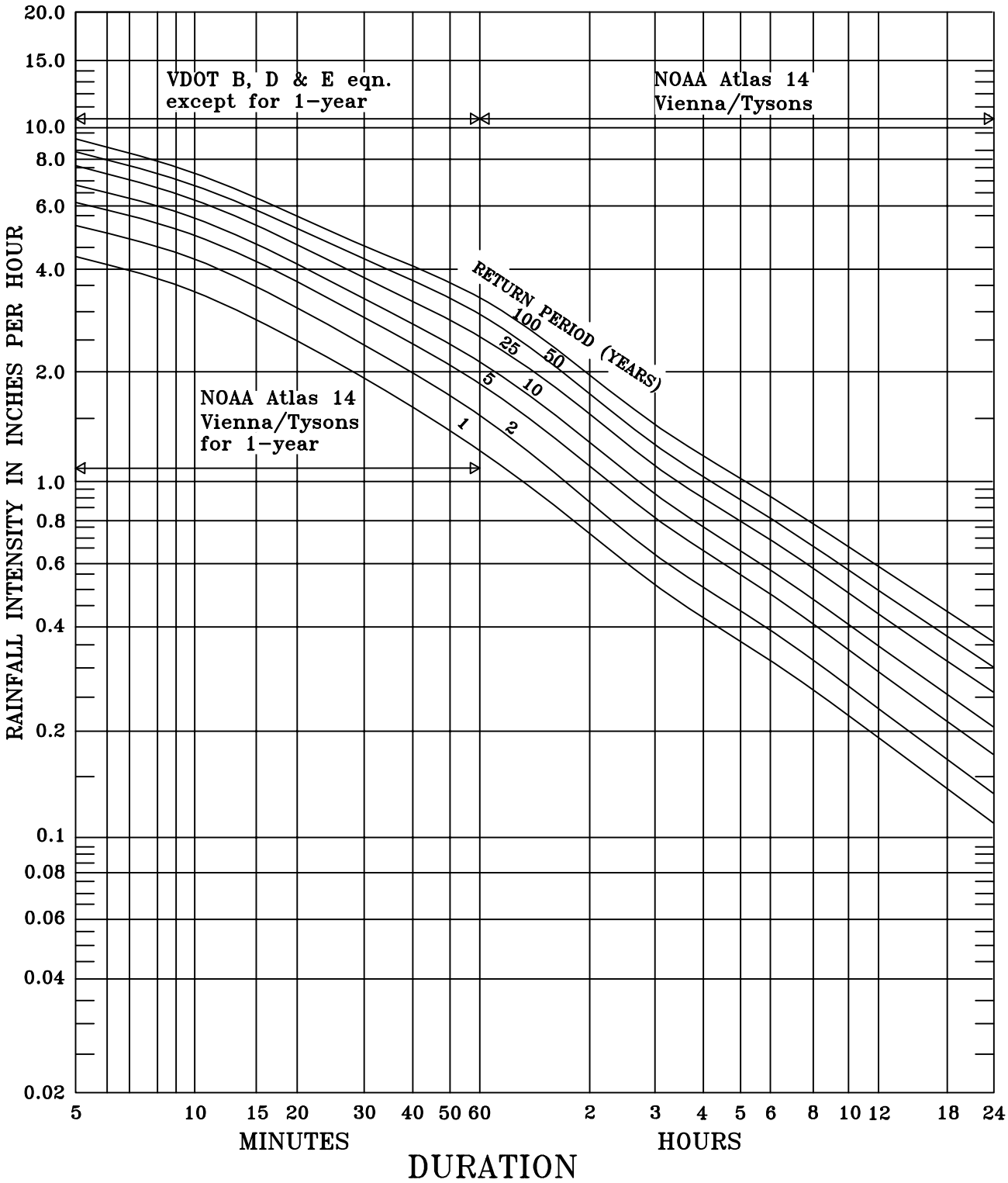

Ref. Sec. 6-0803.2, Rev. 1-00, 2011 Reprint, 2-16	INTENSITY DURATION FREQUENCY CURVES	PLATE NO.	STD. NO.
		3A-6	

Rainfall Intensity (in/hr)

Frequency	1-year	2-year	5-year	10-year	25-year	50-year	100-year
Duration							
5 minutes	4.26	5.23	6.06	6.77	7.69	8.39	9.10
10 minutes	3.40	4.19	4.89	5.45	6.15	6.76	7.28
15 minutes	2.83	3.51	4.13	4.62	5.22	5.77	6.22
30 minutes	1.94	2.41	2.88	3.26	3.73	4.20	4.57
1 hour	1.21	1.53	1.87	2.16	2.54	2.93	3.25
2 hours	0.711	0.868	1.10	1.28	1.54	1.75	1.97
3 hours	0.507	0.617	0.783	0.915	1.10	1.26	1.43
6 hours	0.312	0.379	0.479	0.560	0.682	0.785	0.897
12 hours	0.189	0.228	0.289	0.342	0.421	0.491	0.569
24 hours	0.109	0.132	0.170	0.203	0.254	0.299	0.351

NOTES:

1. VDOT equations (Fairfax County B, D & E values) were used to generate rainfall intensities for storm durations from 5 minutes to 1 hour for the 2, 5, 10, 25, 50 & 100-year storms.

2. NOAA Atlas 14 data for the Vienna/Tysons station was used for storm durations greater than 1 hour.

3. NOAA Atlas 14 data for the Vienna/Tysons station was used for the 1-yr storm. VDOT never performed a regression analysis of the NOAA Atlas 14 data for the 1-year storm.

4. The VDOT equations although developed from a regression analysis of NOAA Atlas 14 data will not yield exacly the same values as the published NOAA Atlas 14 data for the 5, 10, 15, 30 & 60-minute durations because of the curve fitting process.

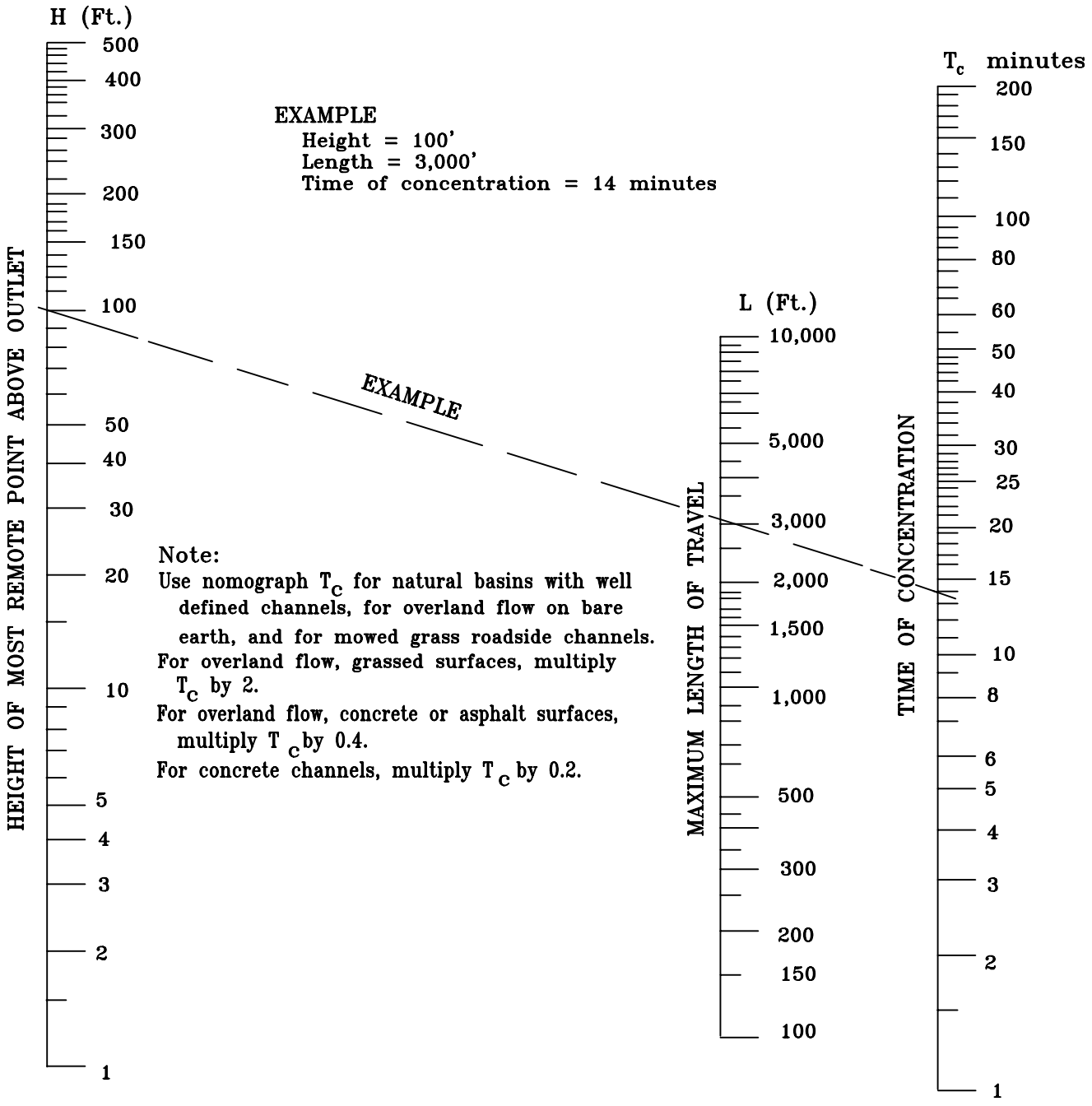

Note:
Use nomograph T_c for natural basins with well defined channels, for overland flow on bare earth, and for mowed grass roadside channels.
For overland flow, grassed surfaces, multiply T_c by 2.
For overland flow, concrete or asphalt surfaces, multiply T_c by 0.4.
For concrete channels, multiply T_c by 0.2.

Ref. Sec. 6-0803.3C(1), 6-1011 Rev. 1-00, 2011 Reprint	TIME OF CONCENTRATION OF SMALL DRAINAGE BASINS	PLATE NO. 4-6	STD. NO.

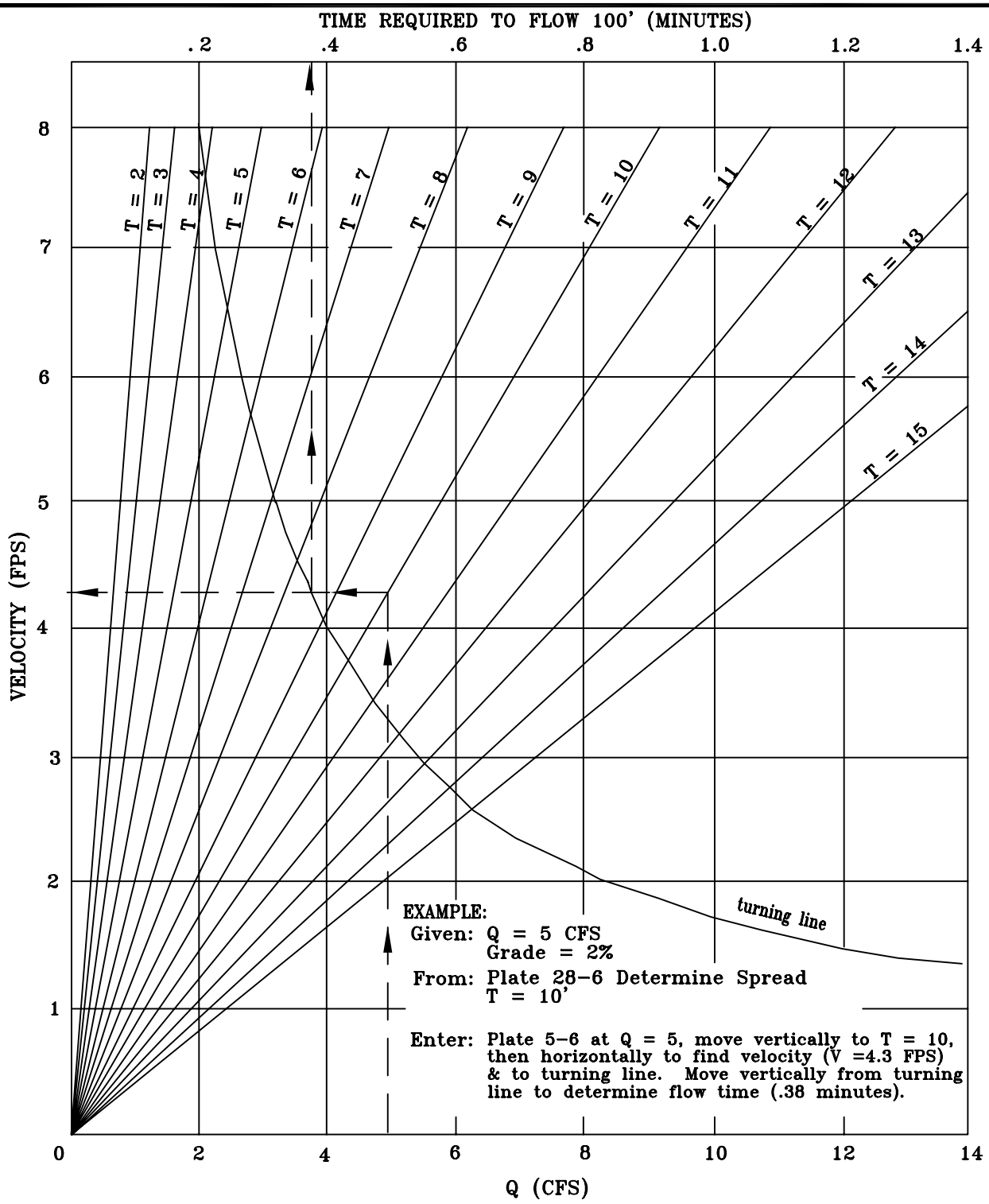

Ref. Sec. 6-0803.3C(2)	VELOCITY & FLOW TIME IN GUTTER	PLATE NO.	STD. NO.
Rev. 1-00		5-6	

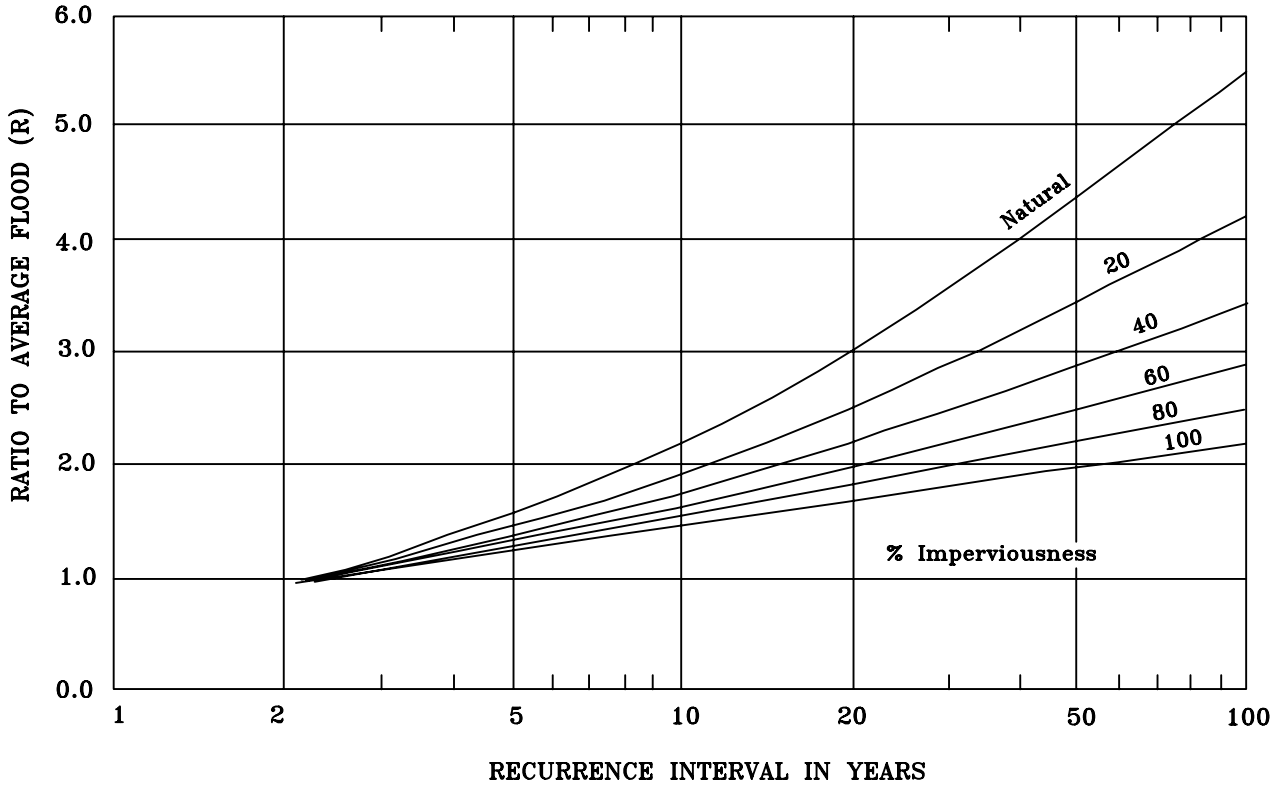

Ref. Sec. 6–0804.2, 6–0804.6B(2) Rev. 1–00, 2011 Reprint	FLOOD FREQUENCY CURVES FOR SELECTED DEGREES OF BASIN IMPERVIOUSNESS	PLATE NO.	STD. NO.
		6–6	

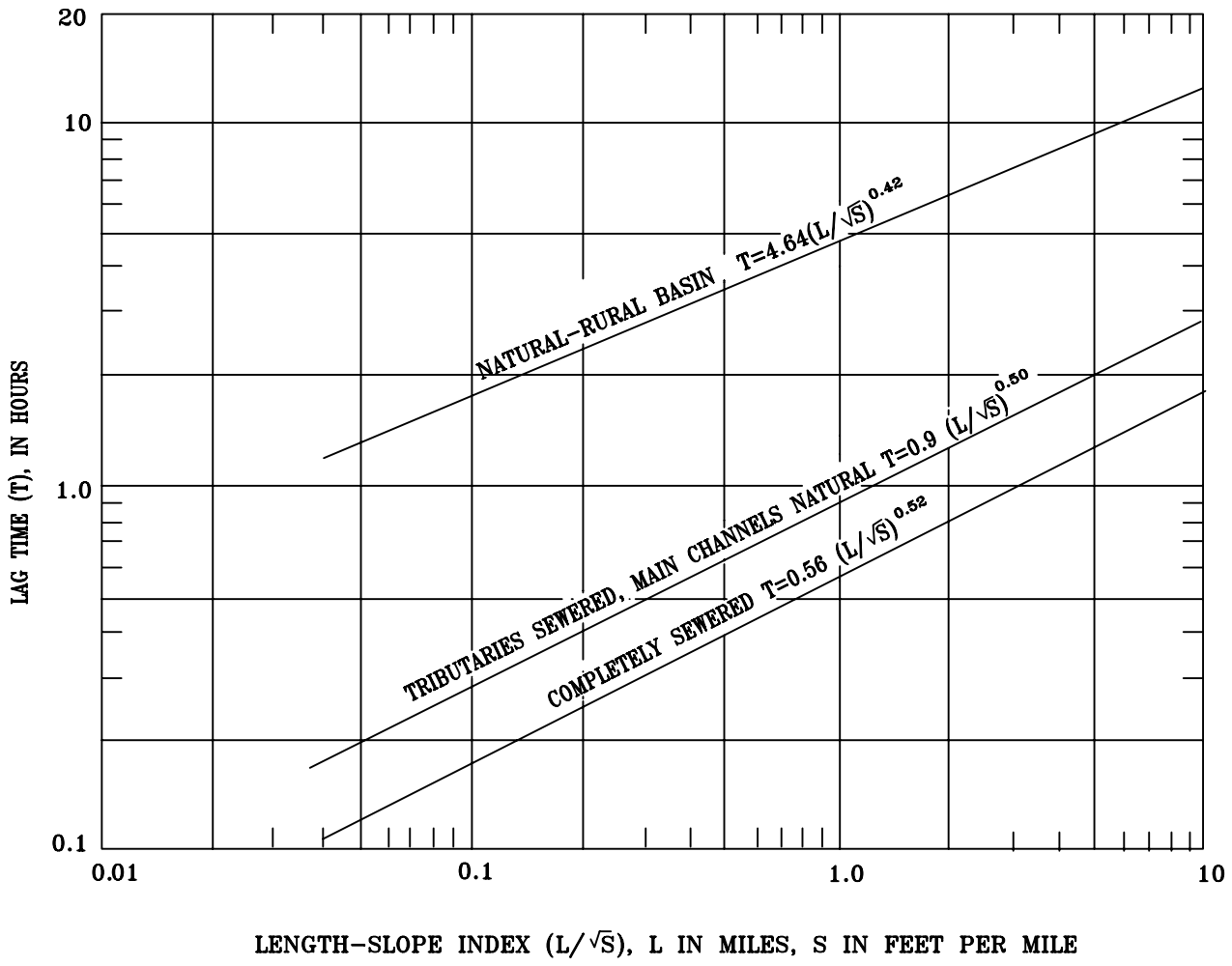

Ref. Sec 6-0804.5, 6-0804.6B(5)	LAG TIME AS A FUNCTION OF A LENGTH-SLOPE INDEX	PLATE NO.	STD. NO.
Rev. 1-00, 2011 Reprint		7-6	

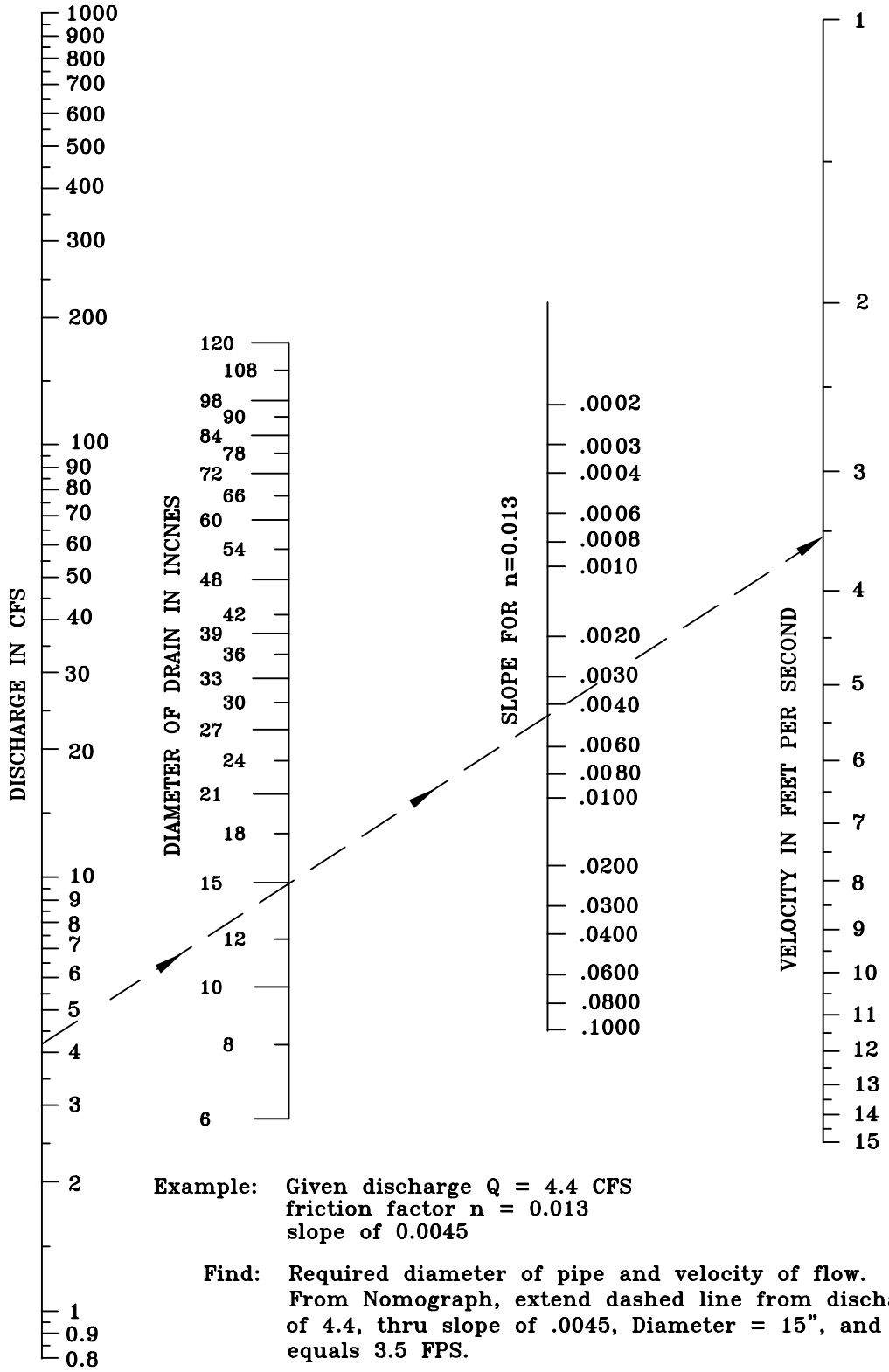

Example: Given discharge Q = 4.4 CFS
friction factor n = 0.013
slope of 0.0045

Find: Required diameter of pipe and velocity of flow.
From Nomograph, extend dashed line from discharge of 4.4, thru slope of .0045, Diameter = 15", and velocity equals 3.5 FPS.

Ref. Sec. 6-0902.2 Rev. 1-00	NOMOGRAPH FOR COMPUTING REQUIRED SIZE OF CIRCULAR DRAIN, FLOWING FULL	PLATE NO.	STD. NO.
		8-6	

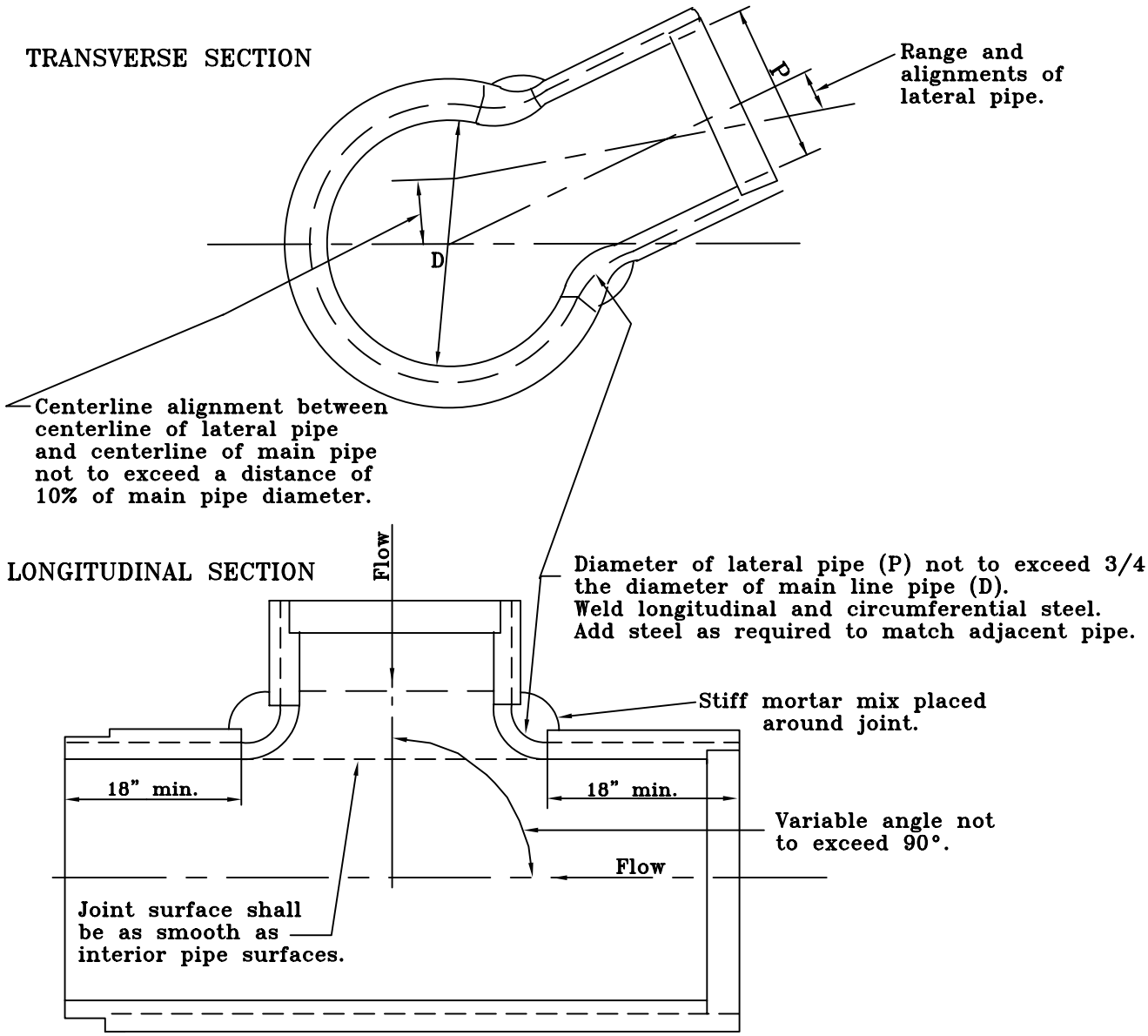

NOTES:

1. Lateral and main pipes shall be reinforced concrete pipe, class II, III or IV, in accordance with ASTM C76. Pipes shall be the same class and shall be pre-fabricated by manufacturer in accordance with this standard.
2. Prefabricated "T" and "Y" sections may be used under the following conditions:
   a) A minimum size of trunk line shall be no less than 30" in diameter.
   b) When size of trunk line is between 30" and 42" in diameter, there must be an access opening in the trunk line to the junction no greater than 50' away.
   c) When trunk sewer line is 48" in diameter and greater there is no limitation on distance to access opening.
3. "T" and "Y" connections should be joined to standard pipe sections in accordance with current VDOT specifications.
4. Use of this standard is permitted outside VDOT right-of-way and with the approval of the Director.

Ref. Sec. 6-0902.2E, 6-0902.2F Rev. 1-00, 2011 Reprint	STANDARD REINFORCED CONCRETE PREFABRICATED "T" OR "Y" CONNECTION	PLATE NO.	STD. NO.
		9-6	CTY-1

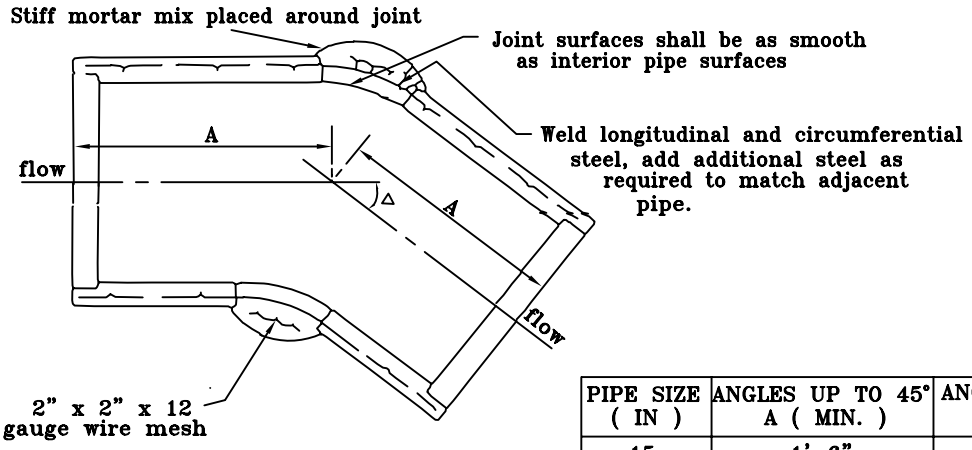

STANDARD BEND FOR ANGLES 45° AND LESS

PIPE SIZE (IN)	ANGLES UP TO 45° A (MIN.)	ANGLES 45° TO 90° B (MIN.)
15	1'-6"	-
18	1'-6"	-
21	2'-0"	-
24	2'-0"	-
27	2'-0"	-
30	2'-0"	-
33	2'-3"	2'-9"
36	2'-3"	2'-9"
42	2'-3"	3'-0"
48	2'-6"	3'-3"
54	2'-6"	3'-6"
60	2'-9"	3'-6"

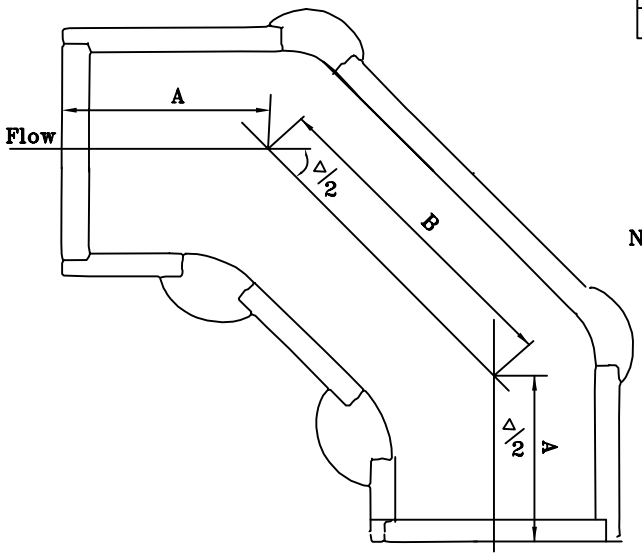

STANDARD BEND FOR ANGLES 45° TO 90°

Notes:

Prefabricated bend sections may be used under the following conditions.

1. For pipe sizes 15" to 30" in diameter, bends no greater than 30° will be allowed provided that there are access openings within 50' of bend.
2. For pipe sizes 33" to 42" in diameter, bends greater than 30° but no greater than 90° will be allowed provided there is an access opening within 50'. Bends up to 30° in the pipe size range have no limitations of distance to access openings.
3. For pipe sizes 48" in diameter and larger, access opening limitations are the same as for a closed conduit system, and bends are allowed up to 90°.
4. Use of this standard is permitted outside VDOT right-of-way with the approval of the Director.

Ref. Sec. 6-0902.2C, 6-0902.2F Rev. 1-00	STANDARD REINFORCED CONCRETE PREFABRICATED BEND	PLATE NO.	STD. NO.
		10-6	CB-1

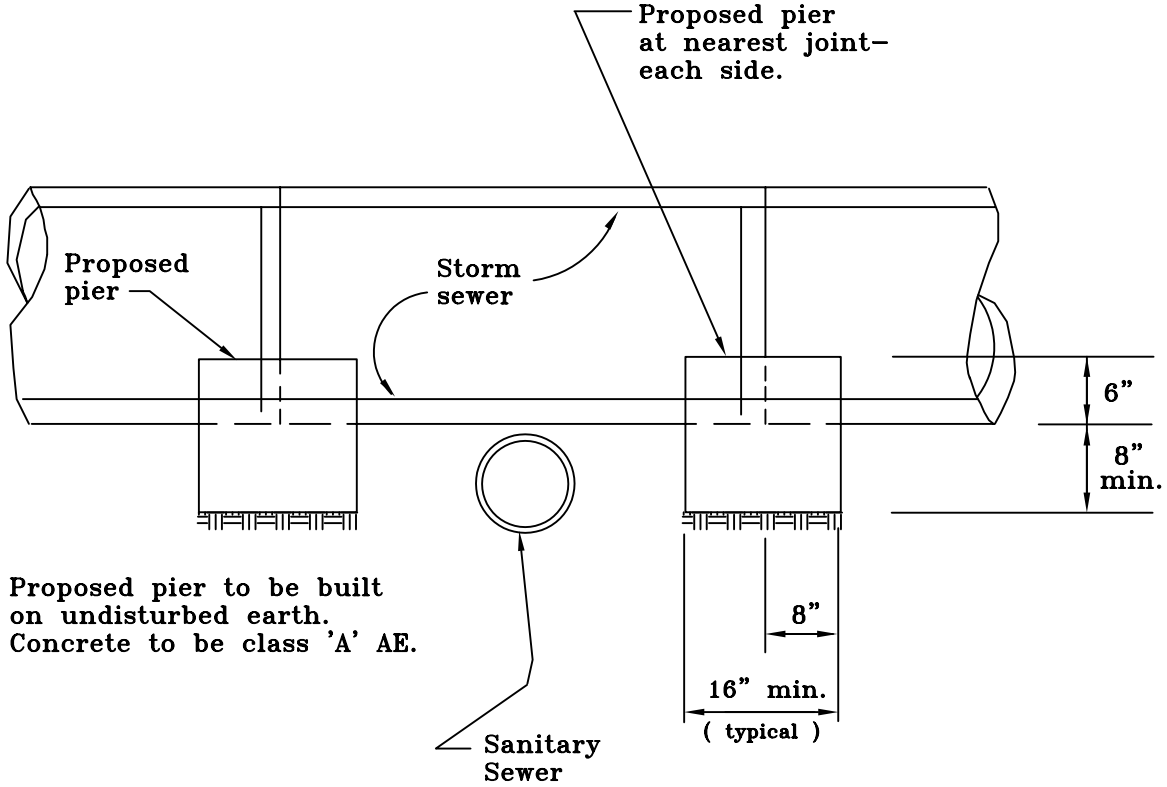

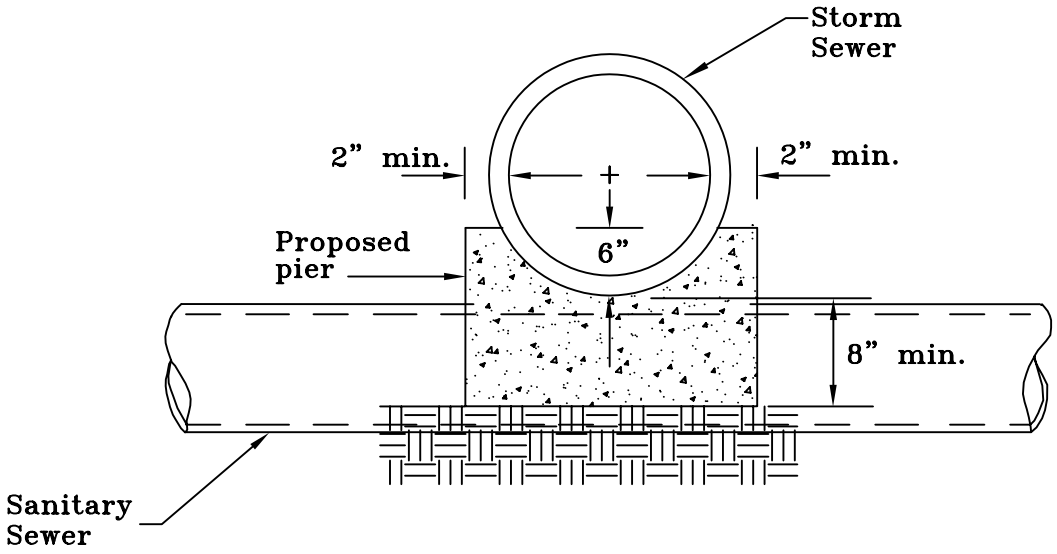

Ref. Sec. 6-0902 Rev. 1-00	CONCRETE PIER FOR STORM SEWER PIPE	PLATE NO.	STD. NO.
		11-6	DPW-26

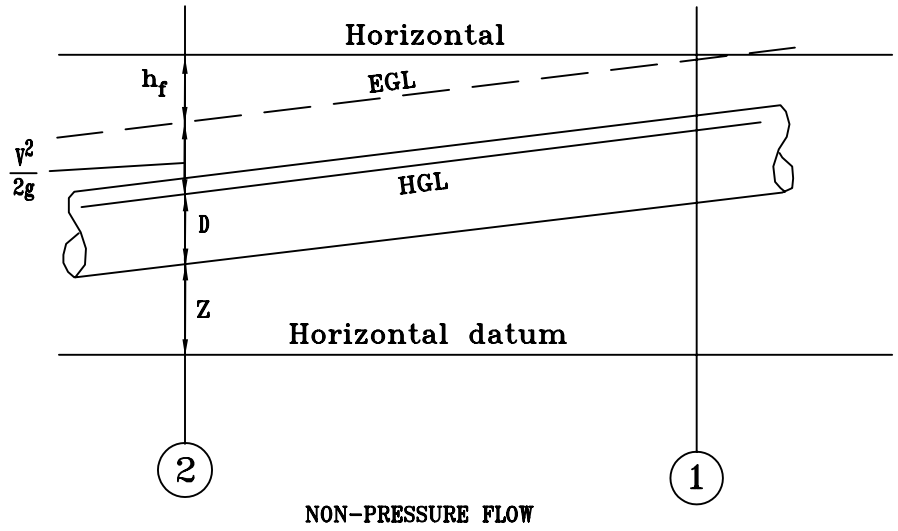

NON-PRESSURE FLOW

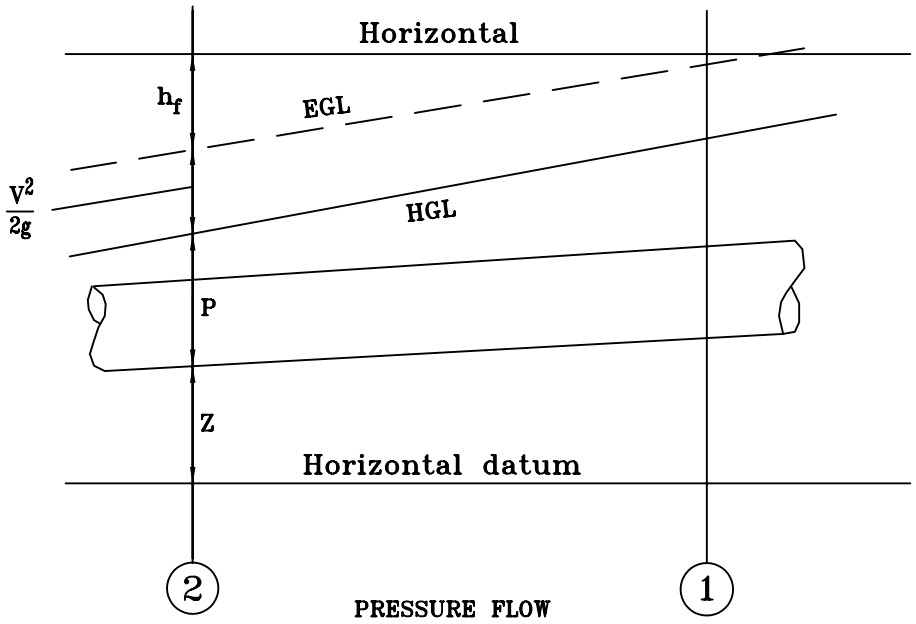

PRESSURE FLOW

Z = Distance above horizontal datum
D = Depth of flow
P = Pressure head
$\frac{V^2}{2g}$ = Velocity head
h_f = Friction loss between section 1 and 2
EGL = Energy grade line
HGL = Hydraulic grade line

Ref. Sec. 6-0904 Rev. 1-00	CLOSED CONDUIT	PLATE NO.	STD. NO.
		12-6	

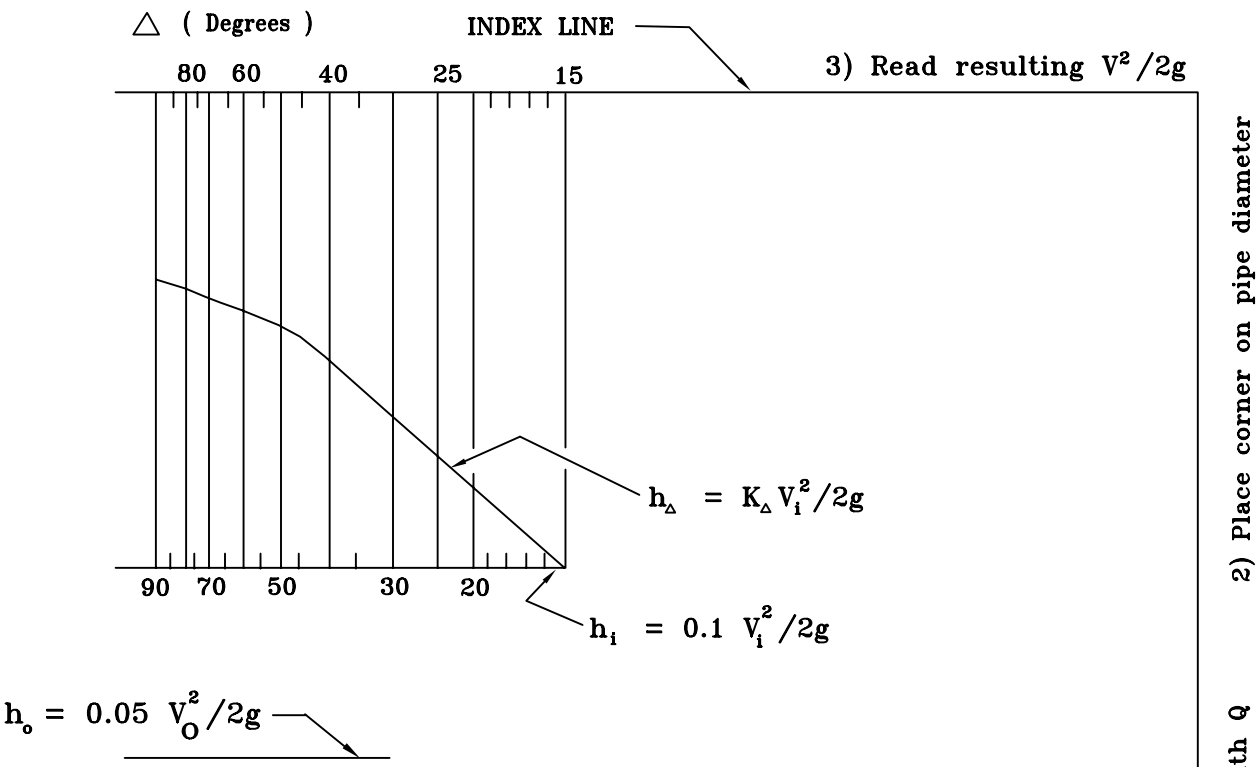

GIVEN: Q_i = 43 CFS D_i = 24"
Q_0 = 49 CFS D_0 = 27" △ = 55°

FIND: h_i, h_0, $h_\triangle$, H_L

SOLUTION:

1. Line up vertical line with Q_i = 43 CFS and D_i = 24", read $V_i^2/2g$ = 2.83 and h_i = 0.28 from the top and middle horizontal lines, respectively.

2. Line up vertical line with Q_0 = 49 CFS and D_0 = 27", read $V_0^2/2g$ = 2.2 and h_0 = 0.11 from the top and bottom horizontal lines, respectively.

3. Overlay horizontal △ degree line at the point △ = 55° with the horizontal index line at $V_i^2/2g$. read value of $h_\triangle$ at the $h_\triangle$ line. $h_\triangle$ = 0.94

4. $H_L = h_i + h_o + h_\triangle$ = 1.33

Energy loss due to angles less than 15° are considered negligible.

Ref. Sec. 6-0904.5C, 6-0904.9	ENERGY LOSSES AT STORM SEWER JUNCTIONS	PLATE NO.	STD. NO.
Rev. 1-00		13-6	

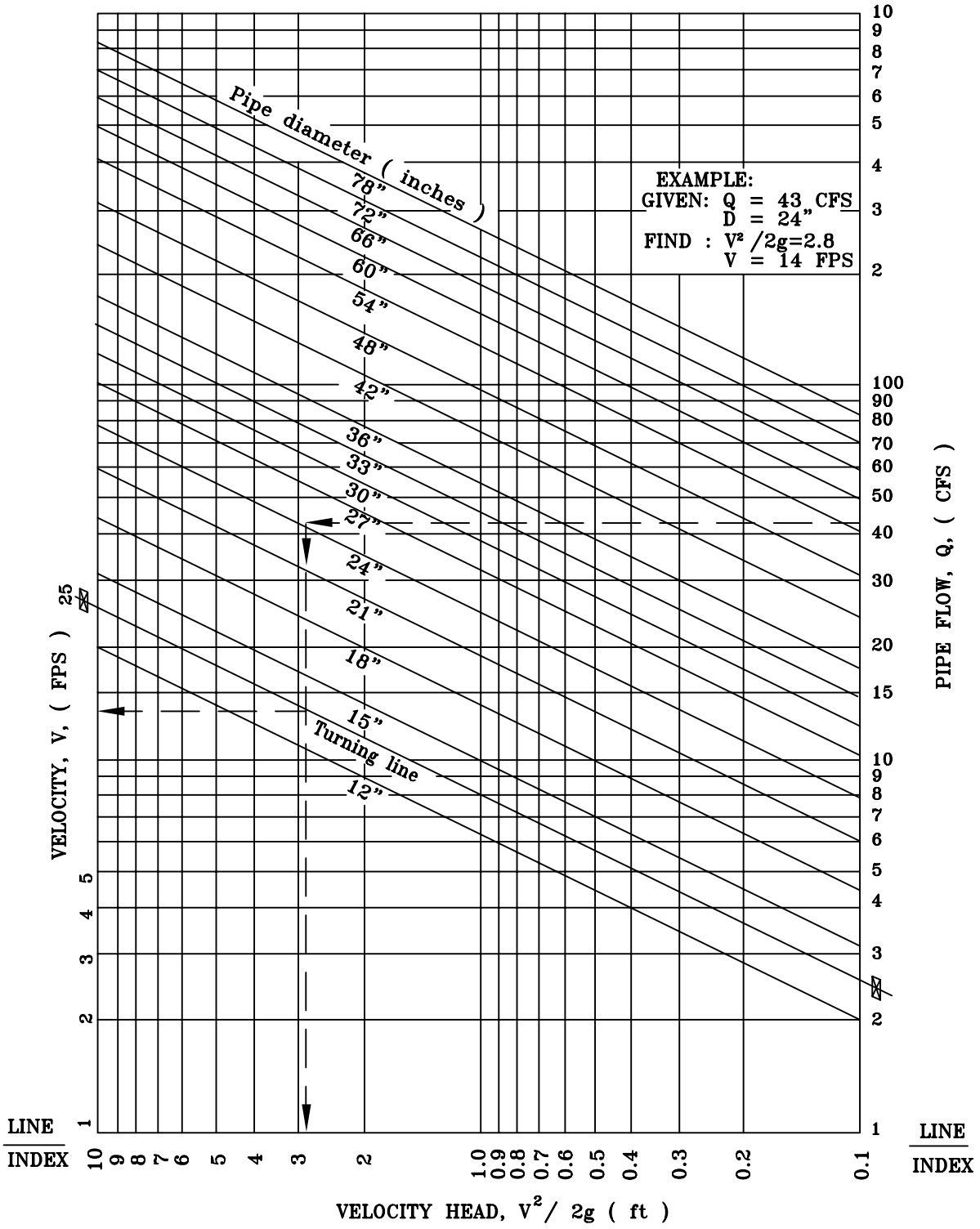

Ref. Sec. 6-0904.5C, 6-0904.9 Rev. 1-00	ENERGY LOSSES AT STORM SEWER JUNCTIONS	PLATE NO.	STD. NO.
		14-6	

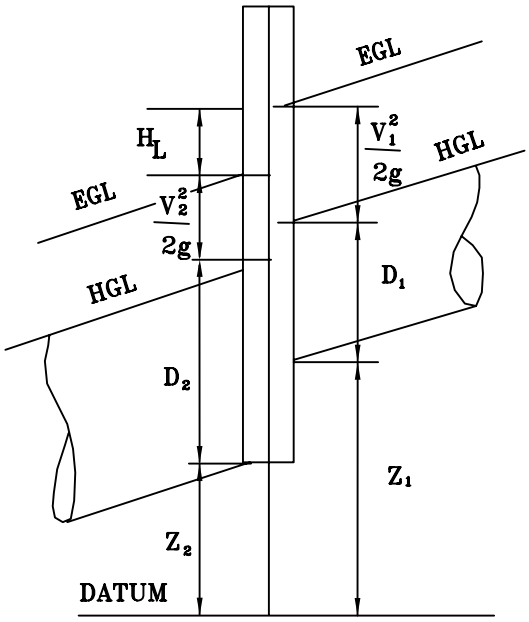

NON- PRESSURE FLOW

$$\text{Drop} = Z_1 - Z_2 = (D_2 - D_1) + \left(\frac{V_2^2}{2g} - \frac{V_1^2}{2g}\right) + H_L$$

$$H_L = h_i + h_o + h_\Delta$$

For non-pressure flow, and approximation of drop, $Z_1 - Z_2$, equal to H_L may be used.

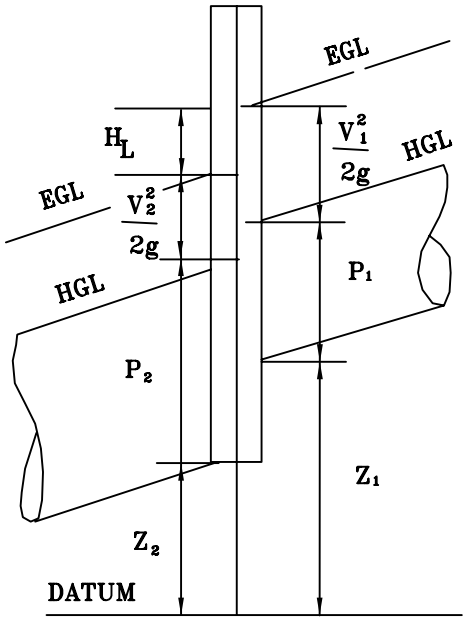

PRESSURE FLOW

$$\text{Drop} = Z_1 - Z_2 = (P_2 - P_1) + \left(\frac{V_2^2}{2g} - \frac{V_1^2}{2g}\right) + H_L$$

$$H_L = h_i + h_o + h_\Delta$$

Z_1 , Z_2 = Incoming and outgoing pipe invert
D_1 , D_2 = Incoming and outgoing depth of flow, assumed to be pipe diameter
P_1 , P_2 = Pressure heads for incoming and outgoing pipes
$\frac{V_1^2}{2g}$, $\frac{V_2^2}{2g}$ = Velocity heads for incoming and outgoing pipes
EGL = Energy grade line
HGL = Hydraulic grade line
H_L = Total energy loss thru junction

Ref. Sec. 6-0904.12	CLOSED CONDUIT JUNCTION	PLATE NO.	STD. NO.
Rev. 1-00		15-6	

$$R = \frac{L}{2(\tan 1/2 \frac{\Delta}{N})} \quad \text{.....1}$$

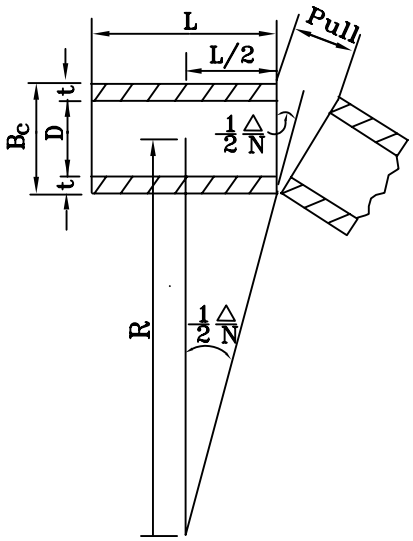

DEFLECTED STRAIGHT PIPE

$$\sin \tfrac{1}{2} \frac{\Delta}{N} = \frac{\text{Pull}}{2(D+2t)} = \frac{\text{Pull}}{2B_c} \quad \text{.....2}$$

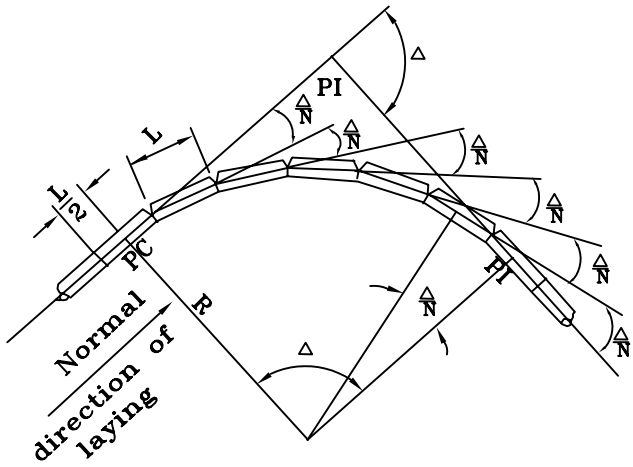

CURVED ALIGNMENT USING DEFLECTED STRAIGHT PIPE

L = Length of pipe sections, feet
R = Radius of curvature, feet
Δ = Total deflection angle of curve, degrees
N = Number of pipe with pulled joints
Δ/N = Total deflection of each pipe, degrees
Pull = Joint opening, inches cannot exceed 25% of spigot length
D = Inside pipe diameter, inches
t = Wall thickness, inches
B_c = Outside pipe diameter, inches

For curved alignment using beveled pipe, see Plate 17-6

Pipe sections to be joined in accordance with Section 302.06 of the VDOT specs.

Ref. Sec. 6-0902.2C. 6-0902.2F, 6-0906, Plate 17-6 Rev. 1-00, 2011 Reprint	MINIMUM RADIUS OF CURVATURE FOR CONCRETE PIPELINE	PLATE NO.	STD. NO.
		16-6	RC-1

BEVELED PIPE

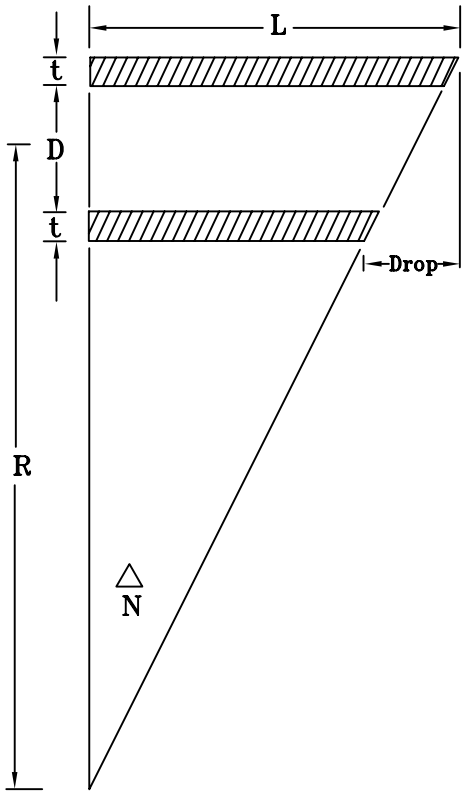

CURVED ALIGNMENT USING BEVELED PIPE

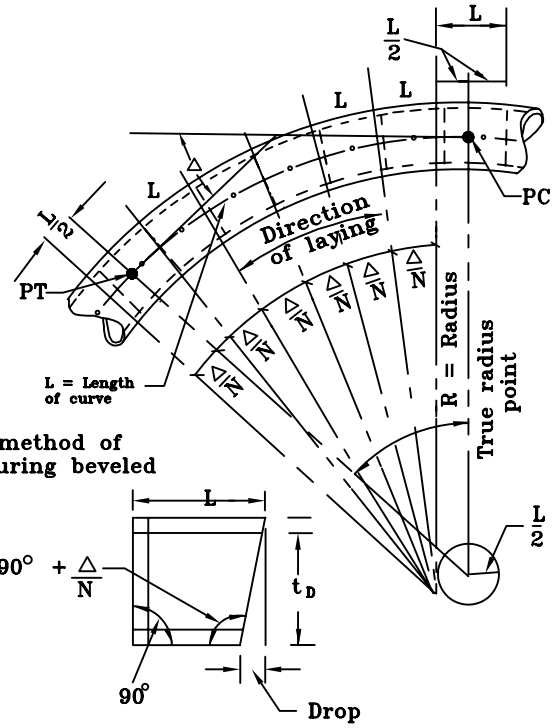

Common method of manufacturing beveled pipe.

Projection of joints do not converge at common point, but are tangents to a common circle whose diameter is equal to pipe length.

$$R = \frac{L}{\text{Tan}\,\frac{\triangle}{N}} - \left(\frac{D}{2} + t\right) \quad \text{.....3}$$

$$R = \frac{L\,(D + 2t)}{\text{Drop}} - \left(\frac{D}{2} + t\right) = \left(\frac{L}{\text{Drop}} - \frac{1}{2}\right)B_c \quad \text{...4}$$

△ = Total deflection angle of curve, degrees

N = Number of radius pipe

L = Standard pipe length being used, feet

R = Radius of curvature, feet

D = Inside diameter of the pipe, feet

t = Wall thickness of pipe, feet

B_c = Outside diameter of the pipe, feet

1. Joint opening (pull) shall not exceed a distance of 25% of the spigot length. Sealing of pipe joints shall be in accordance with VDOT standards.
2. Since the pull is a function of the spigot length it may be different for different pipe manufacturers. The drop is generally dependent on the pipe manufacturer and therefore may also be different for different pipe manufacturers.
3. Formulas used for computing a radius for a curved alignment, using deflected straight pipe are illustrated by the figures and equations in Plate 16-6.
4. Formulas used for computing a radius for a curved alignment using beveled pipe are illustrated by the figures and equations on this Plate.
5. Where it is proposed to use straight pipe, bevel pipe or a combination of both, the curve data and pipe lengths should be specified on the plans.

Ref Sec. 6-0902.2C, 6-0906, Plate 16-6 Rev. 1-00. 2011 Reprint	MINIMUM RADIUS OF CURVATURE FOR CONCRETE PIPELINE BEVELED PIPE	PLATE NO.	STD. NO.
		17-6	RC-2

RADIUS OF CURVATURE FOR BEVELED PIPE

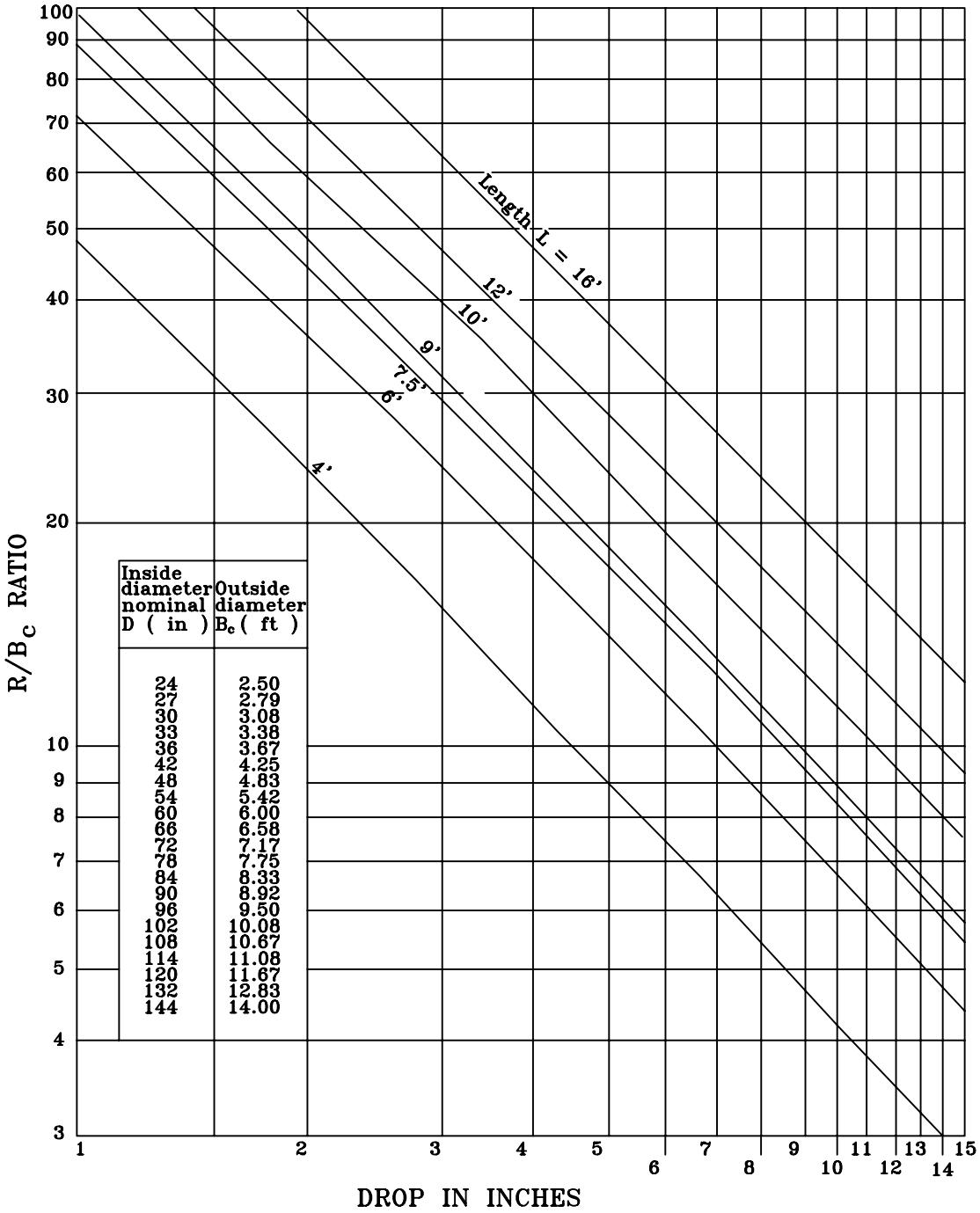

Inside diameter nominal D (in)	Outside diameter B_c (ft)
24	2.50
27	2.79
30	3.08
33	3.38
36	3.67
42	4.25
48	4.83
54	5.42
60	6.00
66	6.58
72	7.17
78	7.75
84	8.33
90	8.92
96	9.50
102	10.08
108	10.67
114	11.08
120	11.67
132	12.83
144	14.00

Ref. Sec. 6-0902.2C, 6-0906	MINIMUM RADIUS OF CURVATURE FOR CONCRETE PIPELINE/BEVELED PIPE	PLATE NO.	STD. NO.
Rev. 1-00		18-6	RC-2A

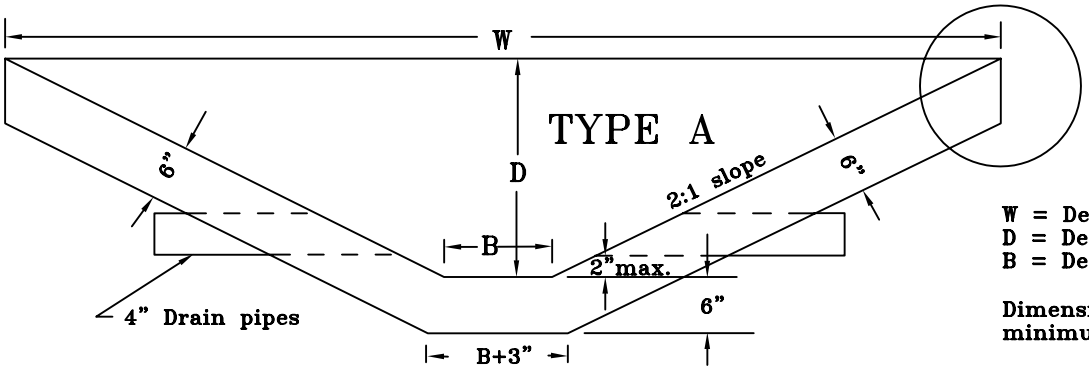

W = Design width
D = Design depth
B = Design bottom width

Dimensions shown are minimum dimensions.

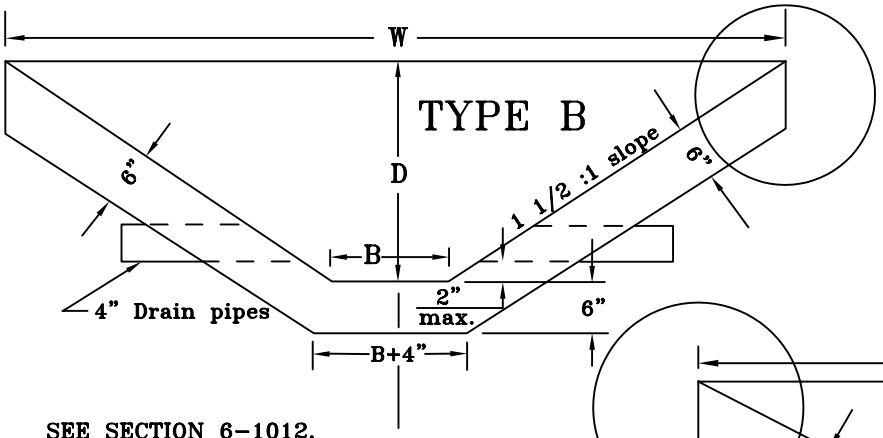

SEE SECTION 6-1012.

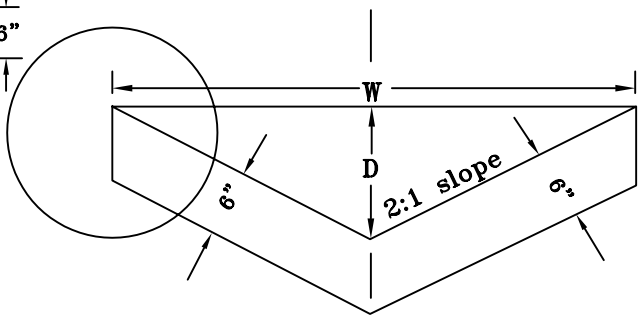

TYPE C

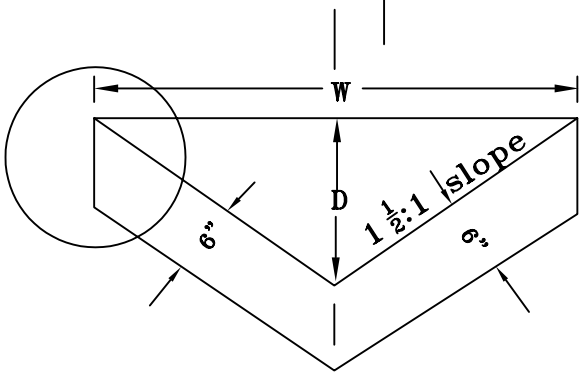

TYPE D

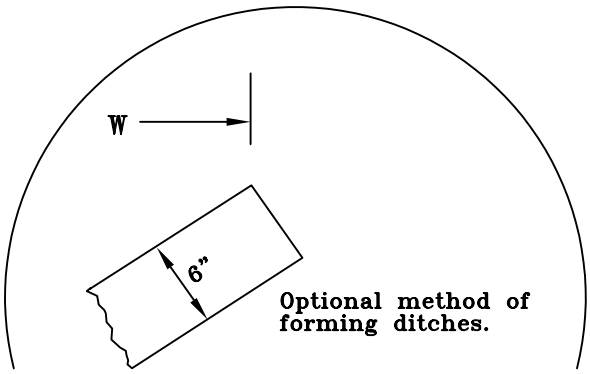

Optional method of forming ditches.

Provide a smooth transition into the connecting structure with a minimum 6" throat opening.

Ref. Sec. 6-1002.2G(5), 6-1012.1S, 6-1012 Rev. 1-00, 2011 Reprint	PAVED DITCHES TYPE A, B, C, & D	PLATE NO.	STD. NO.
		19-6	PD-A,B,C,D

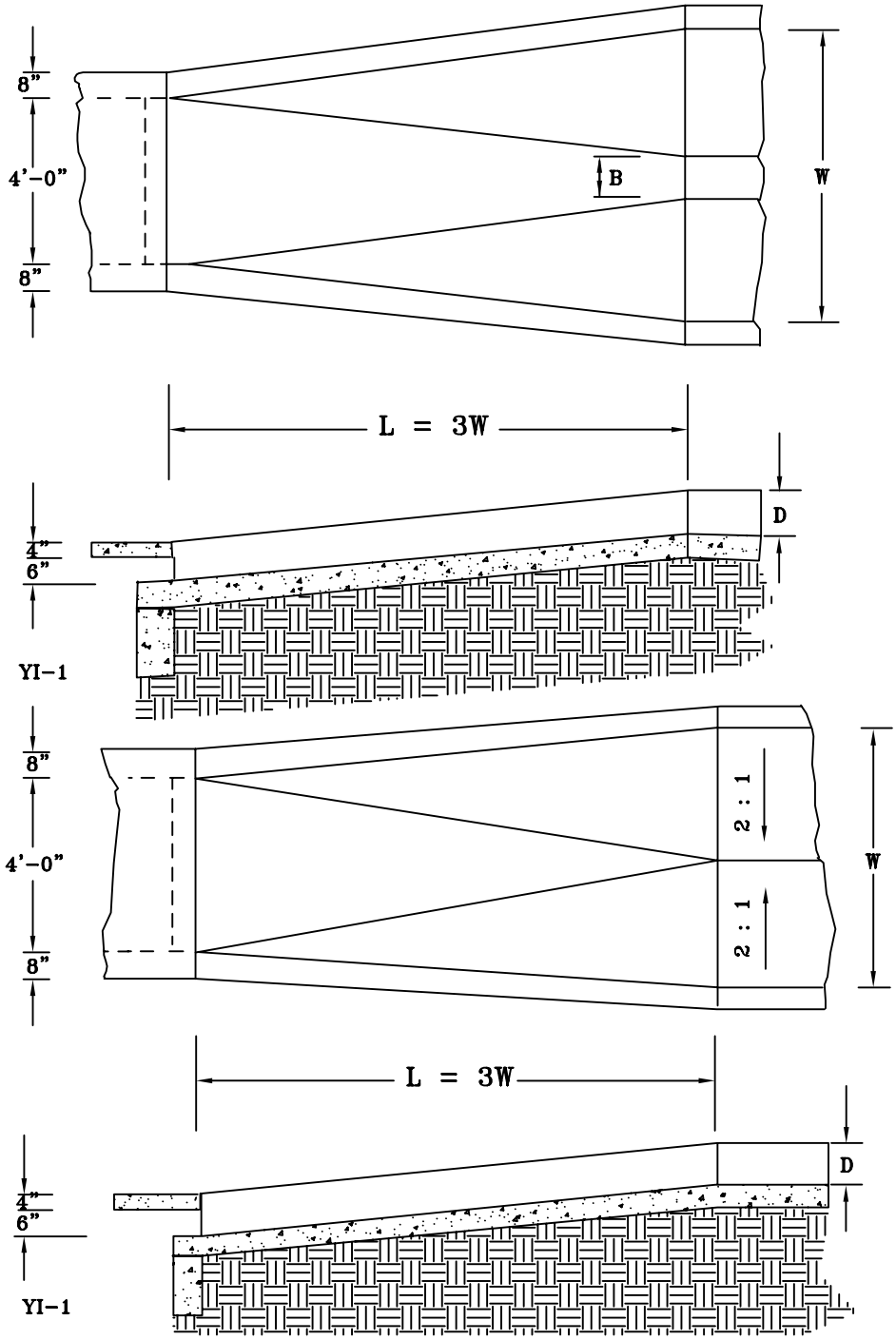

See Section 6-1012

The paved transition ditch shall rest on the structure wall or shall be keyed or dowelled into the wall to prevent settlement.

Ref. Sec. 6-1002.2G(5), 6-1012 Rev. 1-00, 2011 Reprint	TRANSITION - PAVED OR SODDED DITCH TO YARD INLET	PLATE NO.	STD. NO.
		20-6	TR-1

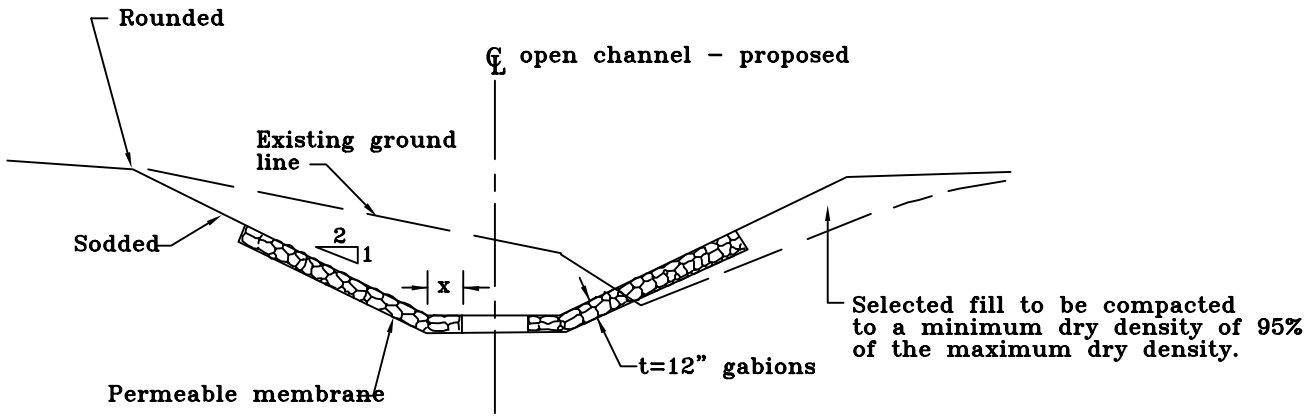

TYPICAL CHANNEL SECTION

X = dimensions to be at least $1\frac{1}{2}$ times the depth of anticipated scour in the channel.
n = (roughness coefficient) = 0.028

Use permeable membrane (synthetic fiber or 4" – 6" gravel layer) if bank material is fine sand or silt to prevent leaching.

Thickness of gabions: t = 12" when alignment of channel is straight, side slopes are less than 30° and velocity is less than 10 FPS. t = 18" for curved alignment, side slopes of 30° to 45° and velocities 10 TO 15 FPS.

Gabion baskets should be filled while under tension to assure better alignment and compaction.

Gabions will be made with galvanized steel wire triple–twisted mesh; the wire meeting Federal specification QQ–W–461F Class 3, and the galvanizing being finish 5, class 3 (0.80 oz./SF). A polyvinyl coating is required on the galvanized wire when used under highly corrosive conditions (pH greater than 11).

Ref. Sec. 6–1002, 6–1012.1V Rev. 1–00, 2011 Reprint	GABIONS– TYPICAL SECTION OPEN CHANNEL	PLATE NO.	STD. NO.
		21–6	GB–1

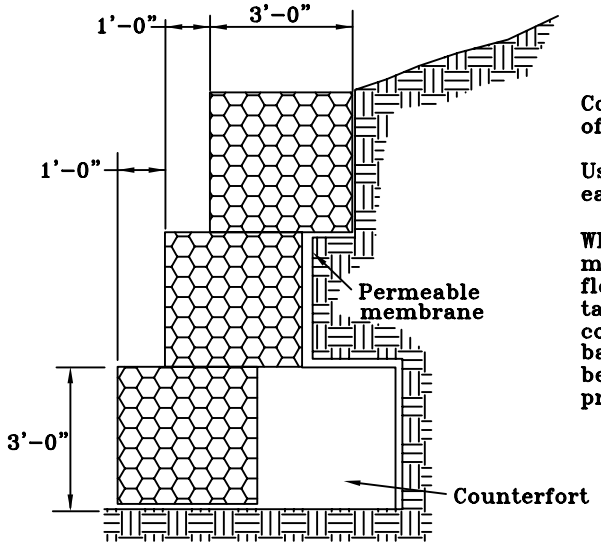

Counterforts may be used to increase the effectiveness of gabion revetments on slopes greater then 2:1.

Use step-back revetments when encountering considerable earth thrust and steeper than 1:1 slopes.

When stream banks are composed of relatively impermeable materials like silt or clay, the possibility exists after a flood that the level of groundwater in the soil is substantially higher than that in the stream. This unstable condition may cause the bank to slough, carrying the bank paving with it. In such cases, the revetment must be designed as a retaining structure as well as a protective pavement.

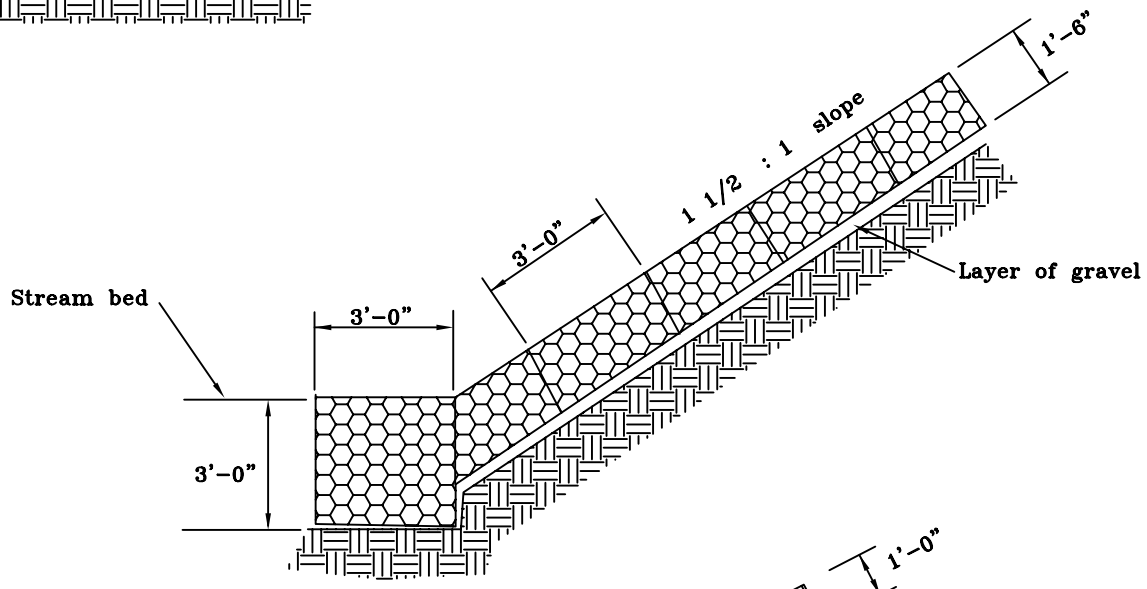

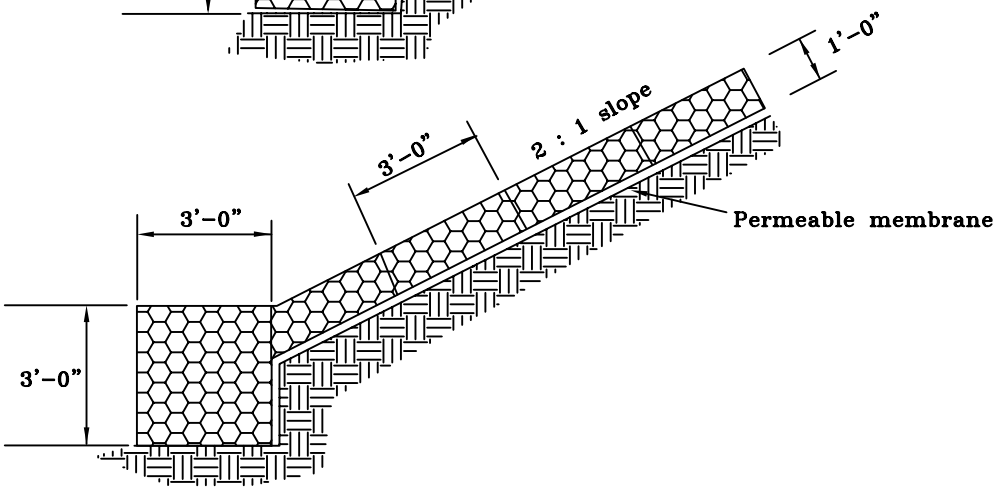

Ref. Sec. 6-1002, 6-1012.1V Rev. 1-00, 2011 Reprint	GABIONS- TYPICAL SECTION REVETMENT WITH TOE WALL	PLATE NO. 22-6	STD. NO. GB-2

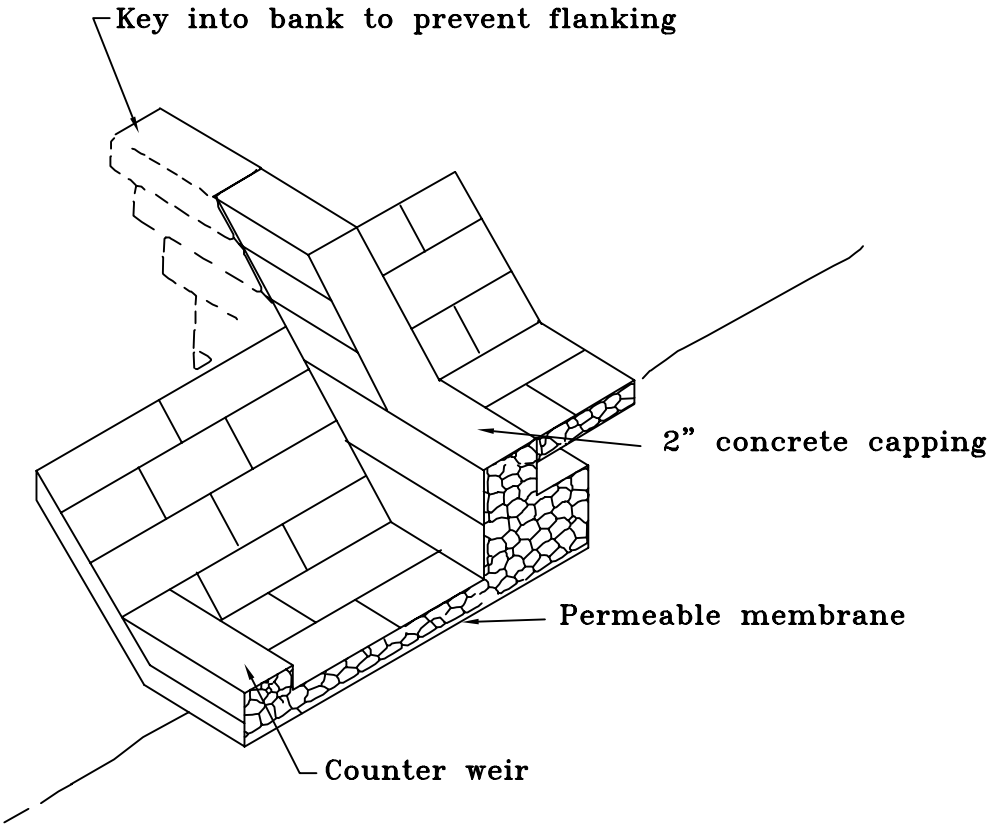

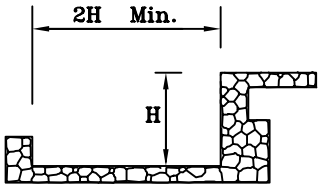

Grouting of weir notch is recommended after settlement to protect wire mesh from abrasion.

Counter-weir creates stilling pool which dissipates energy of falling water thus eliminating undercutting of weir.

'H' should be limited to 3' max. if possible

Ref. Sec. 6-1002, 6-1012.1V Rev. 1-00, 2011 Reprint	GABIONS - TYPICAL SECTION WEIR	PLATE NO.	STD. NO.
		23-6	GB-3

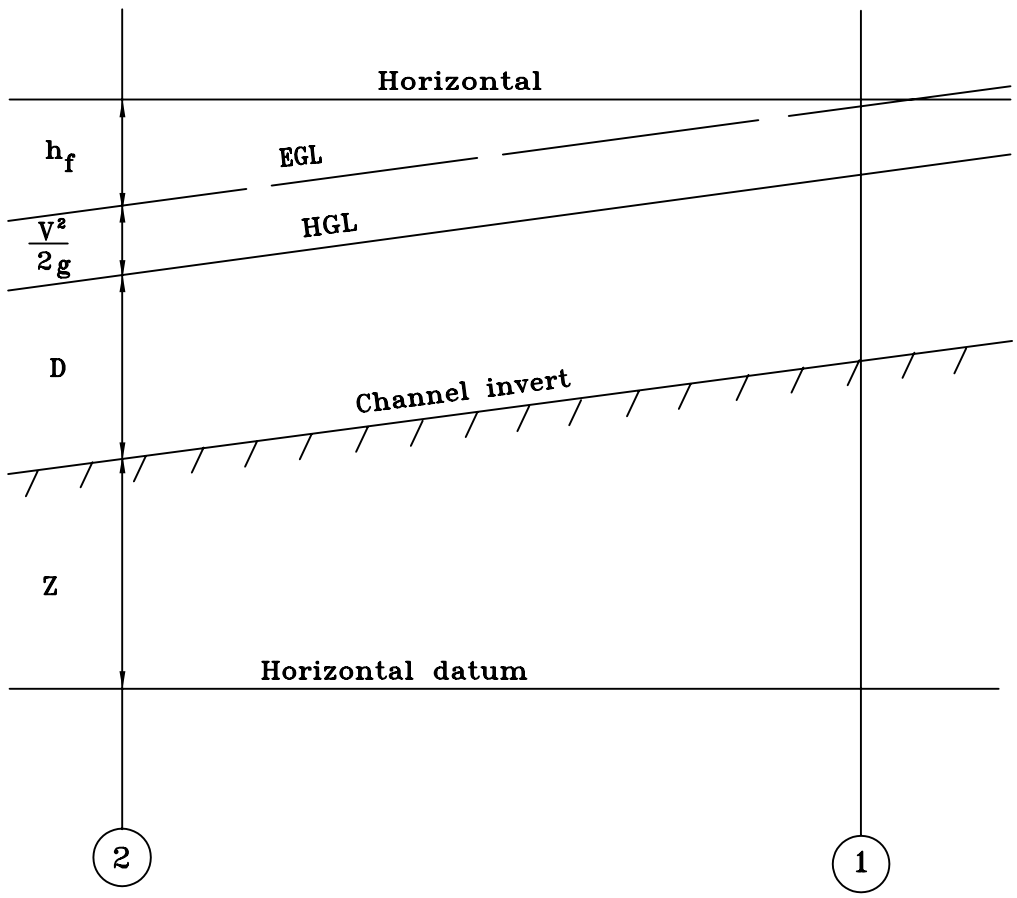

Z = Distance above horizontal datum

D = Depth of flow

$\frac{V^2}{2g}$ = Velocity head

h_f = Friction loss between section 1 and 2

EGL = Energy grade line

HGL = Hydraulic grade line

Ref. Sec. 6-1007 Rev. 1-00	OPEN CHANNEL	PLATE NO.	STD. NO.
		24-6	

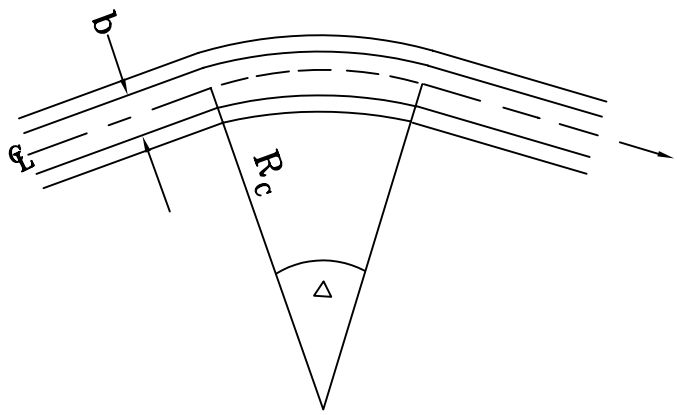

R_c = Centerline radius of channel, feet

b = Bottom width of channel, feet

△ = Deflection angle between tangent sections of channel, degrees

1. K_2 values from curve are for ratios of R_c/b between 2 and 5.
2. To obtain K_2 value for R /b less than 2, double the K_2 value from the curve.
3. For ratios of R_c/b greater than 5, the energy loss thru channel is considered negligible.

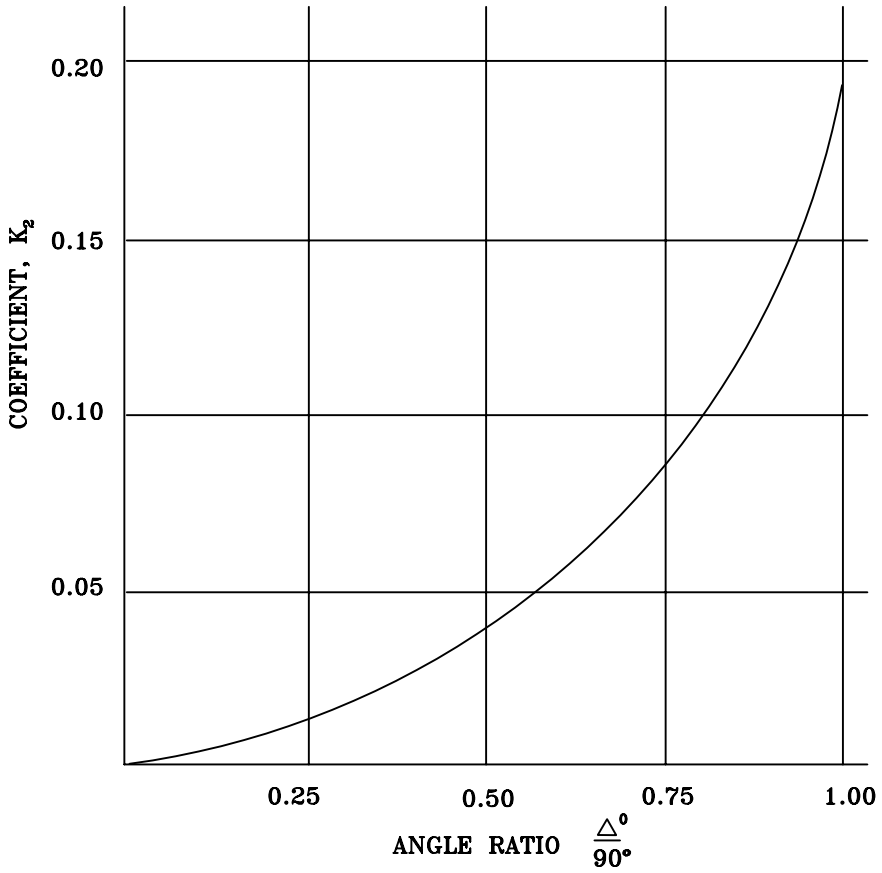

Ref. Sec. 6-1007.2B, 6-1007.2C Rev. 1-00, 2011 Reprint	ENERGY LOSS COEFFICIENTS FOR CURVED CHANNELS	PLATE NO.	STD. NO.
		25-6	

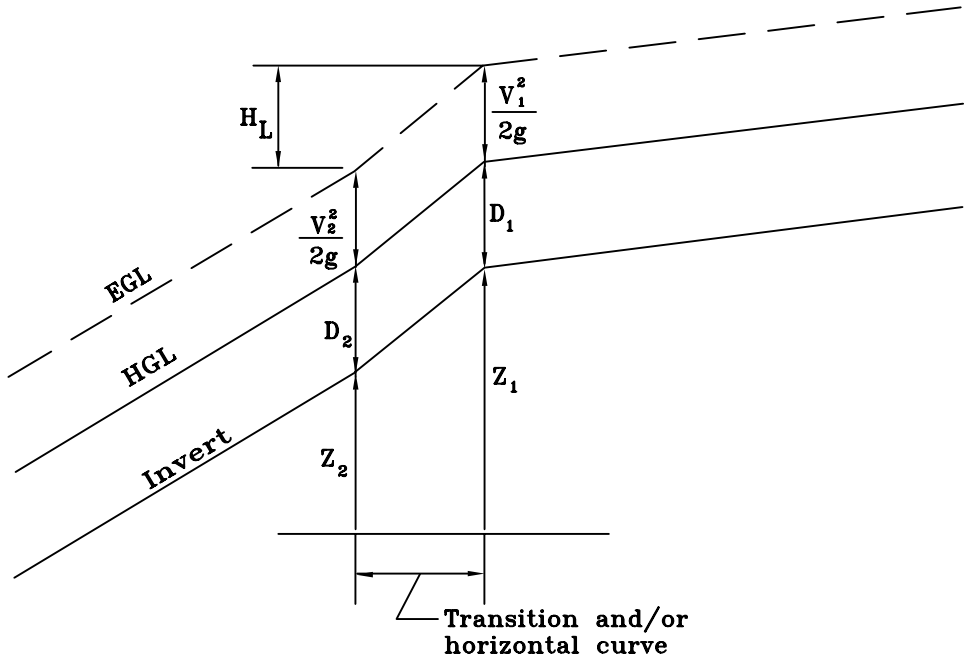

$$Z_1 - Z_2 = (D_2 - D_1) + \left(\frac{V_2^2}{2g} - \frac{V_1^2}{2g}\right) + H_L$$

$$H_L = h_1 + h_2 + h_f$$

Z_1, Z_2 = Incoming and outgoing channel inverts

D_1, D_2 = Depth of flow in incoming and outgoing channels

$\frac{V_1^2}{2g}, \frac{V_2^2}{2g}$ = Velocity head of incoming and outgoing channels

H_L = Total energy loss

h_1 = Energy loss thru transition

h_2 = Energy loss thru curve

h_f = Friction loss thru transition and/or curve length, generally negligible

Ref. Sec. 6-1007.2C Rev. 1-00, 2011 Reprint	OPEN CHANNEL TRANSITION AND/OR HORIZONTAL CURVE	PLATE NO.	STD. NO.
		26-6	

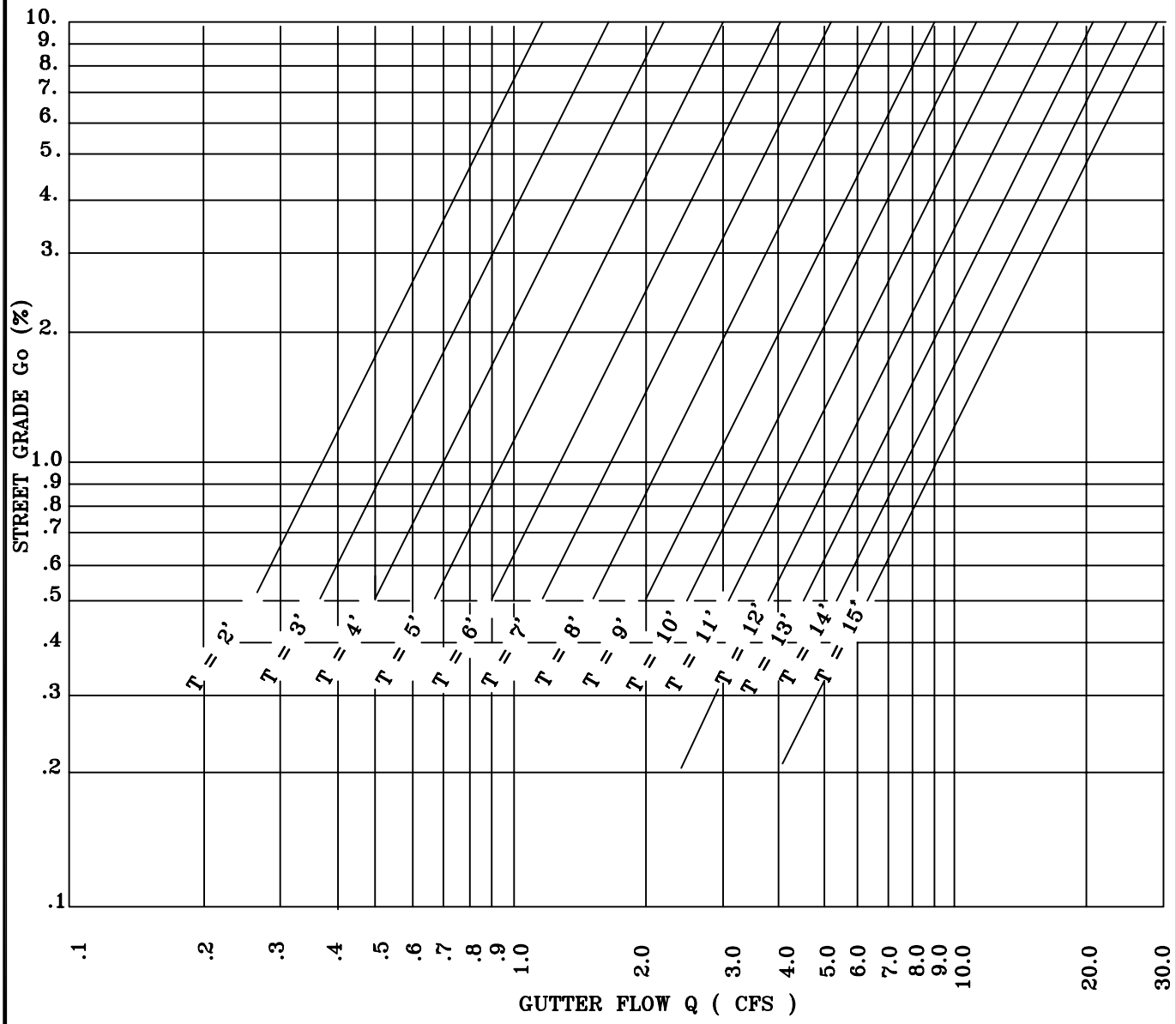

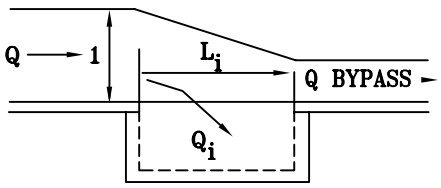

Ref. Sec. 6-1103.10, 6-1103.11 Rev. 1-00, 11-05, 2011 Reprint	CURB INLET DESIGN CHART CURB INLETS ON GRADE	PLATE NO.	STD. NO.
		28-6	

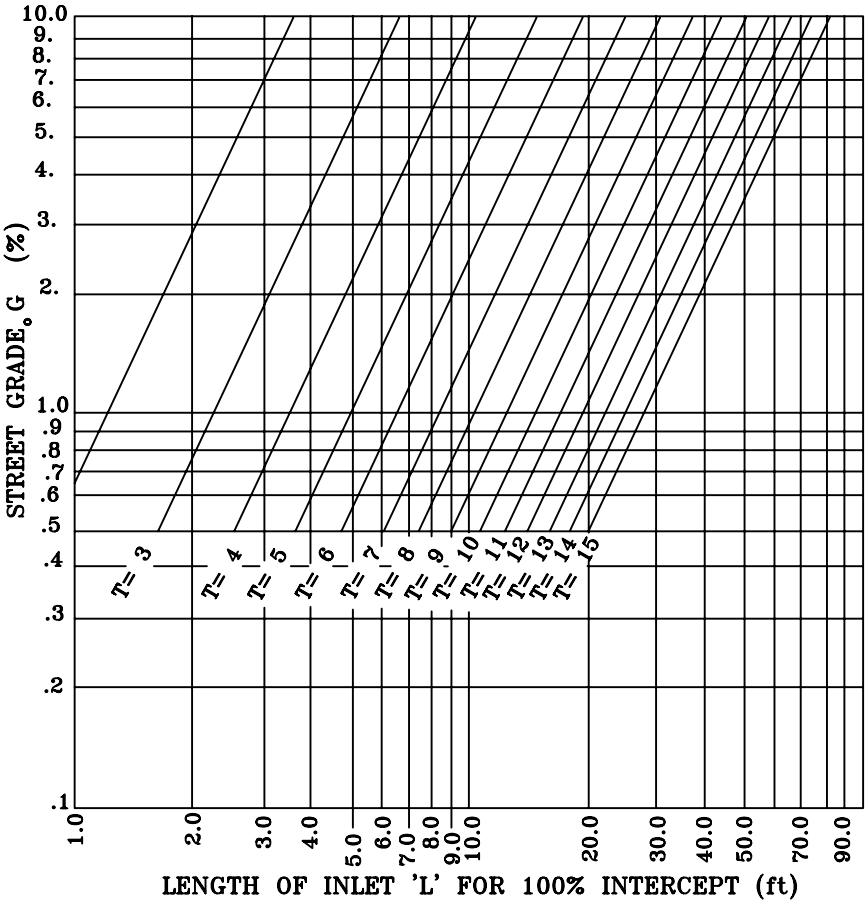

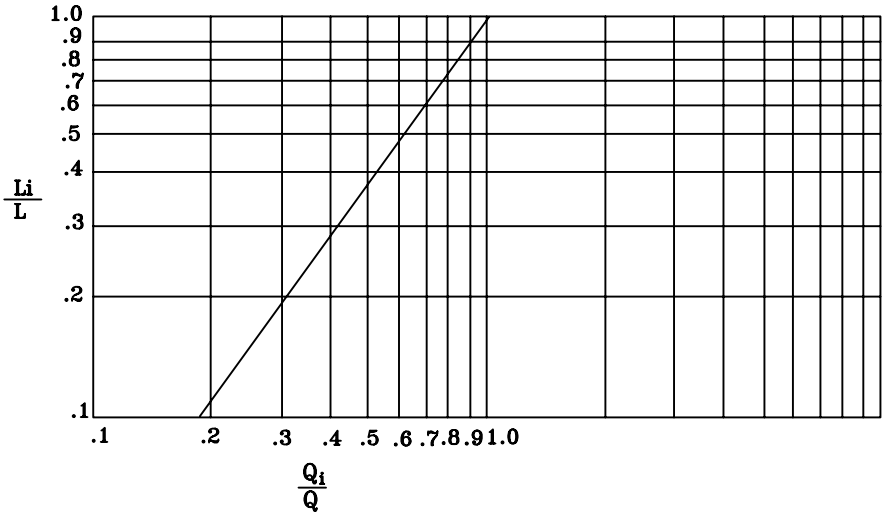

Ref. Sec. 1103.10, 6-1103.11 Rev. 1-00, 11-05, 2011 Reprint	CURB INLET DESIGN CHART CURB INLETS ON GRADE	PLATE NO. 29-6	STD. NO.

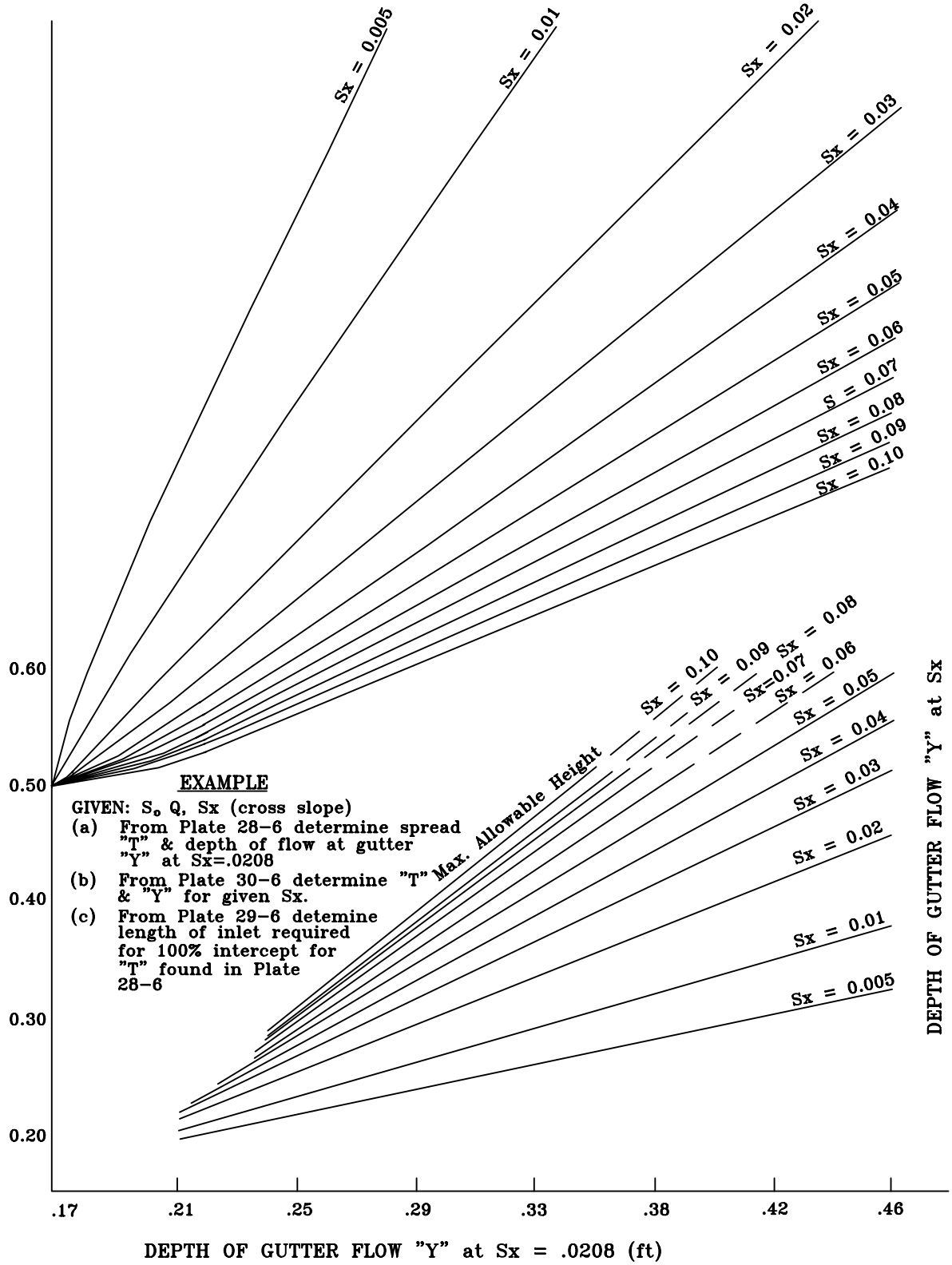

EXAMPLE

GIVEN: S_o Q, Sx (cross slope)

(a) From Plate 28-6 determine spread "T" & depth of flow at gutter "Y" at Sx=.0208

(b) From Plate 30-6 determine "T" & "Y" for given Sx.

(c) From Plate 29-6 detemine length of inlet required for 100% intercept for "T" found in Plate 28-6

Ref. Sec, 6-1103.11 Rev. 1-00, 11-05, 2011 Reprint	SPREAD AND DEPTH OF GUTTER FLOW VS. CROSS SLOPE	PLATE NO.	STD. NO.
		30-6	

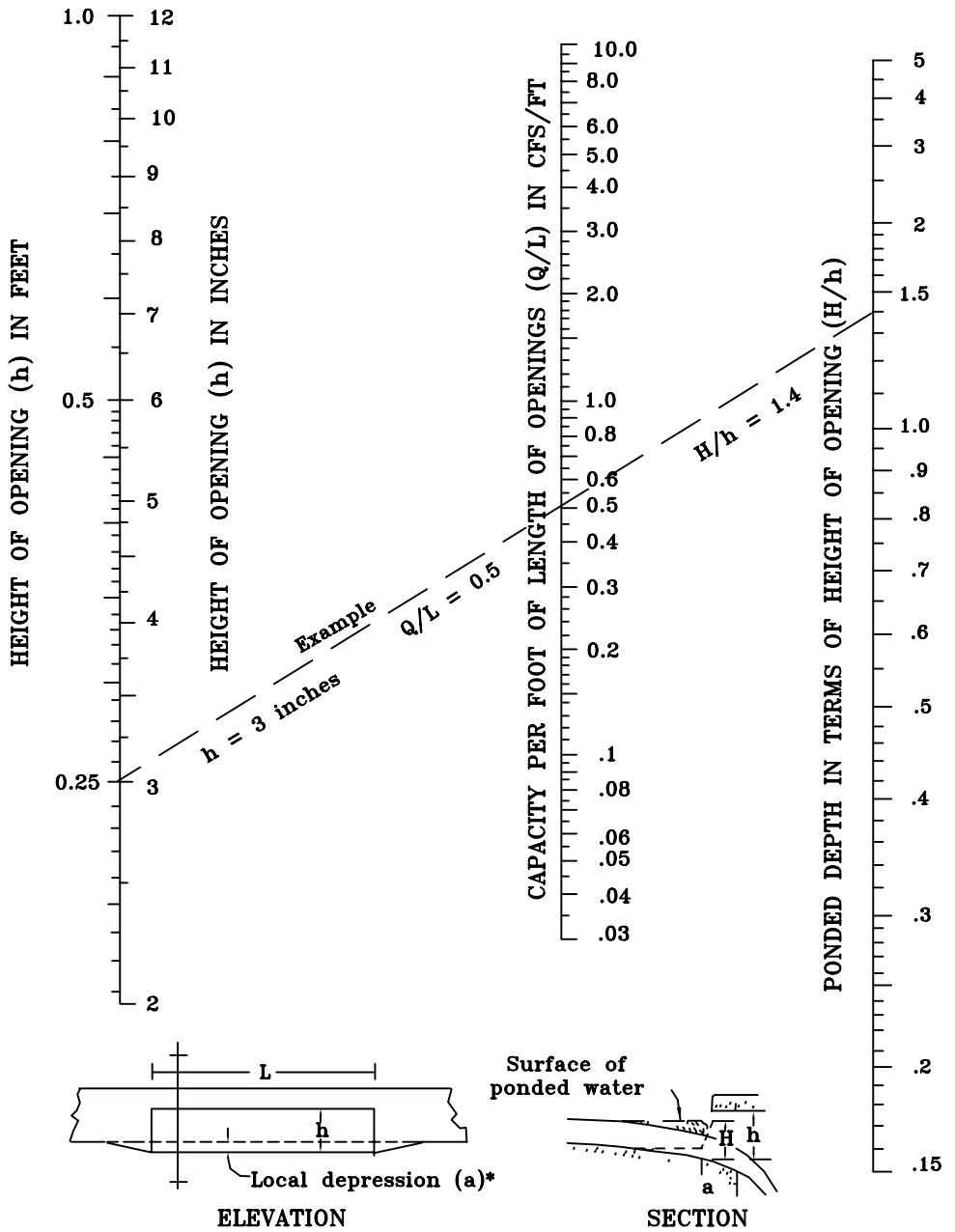

* "a" identifies local depression dimensions for DI-3A, B and C

Ref. Sec. 6-1103.12, 6-1104.1 Rev. 1-00, 11-05, 2011 Reprint	CAPACITY OF CURB INLETS AND YARD INLETS AT LOW POINT IN GRADE	PLATE NO.	STD. NO.
		31-6	

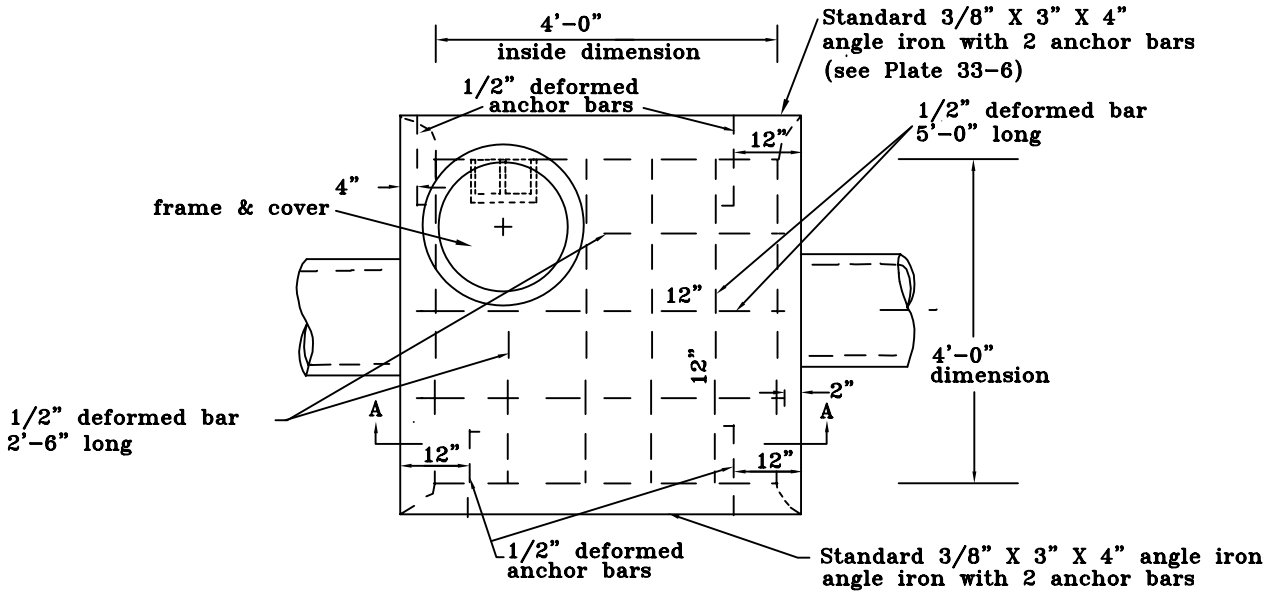

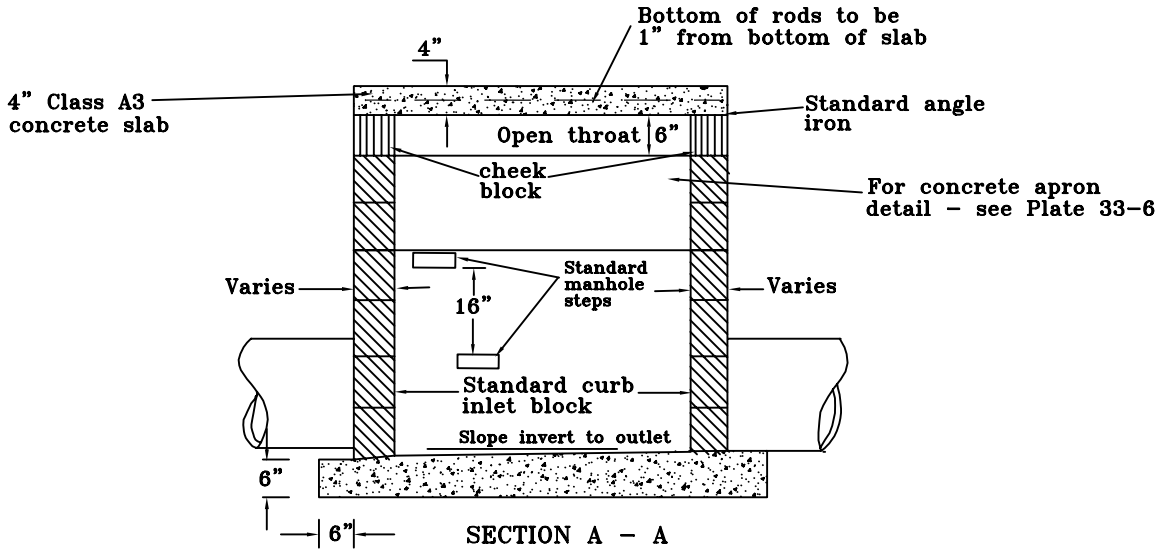

Yard inlets deeper than 4'-0" shall have steps placed as shown.

Dimensions of yard inlets shown are for pipe sizes up to and including 33" pipe, while providing a minimum of 6" clearance when possible from inside wall of structure to OD of pipe. Inlets for pipes greater than 36" shall require a special design.

Symmetrical channels shall be formed in the invert of the box from the inlet pipe to the outlet pipe.

Increase the horizontal depth and pave invert of yard inlets for skewed pipe as directed by the inspector.

Provide 3/8" X 3" X 4" angle iron for full length of throat unless it is precast. The 4" flange of angle iron shall be vertical and showing on face of yard inlet. Angle iron shall be painted with black asphaltum paint.

The inside and outside walls, as they are laid, shall be plastered with mortar a minimum of 1/2" thick when construction of block.

Ref. Sec. 1104.4 Rev. 1-00, 11-05, 2010 Reprint	STANDARD YARD INLET	PLATE NO. 32-6	STD. NO. YI-1

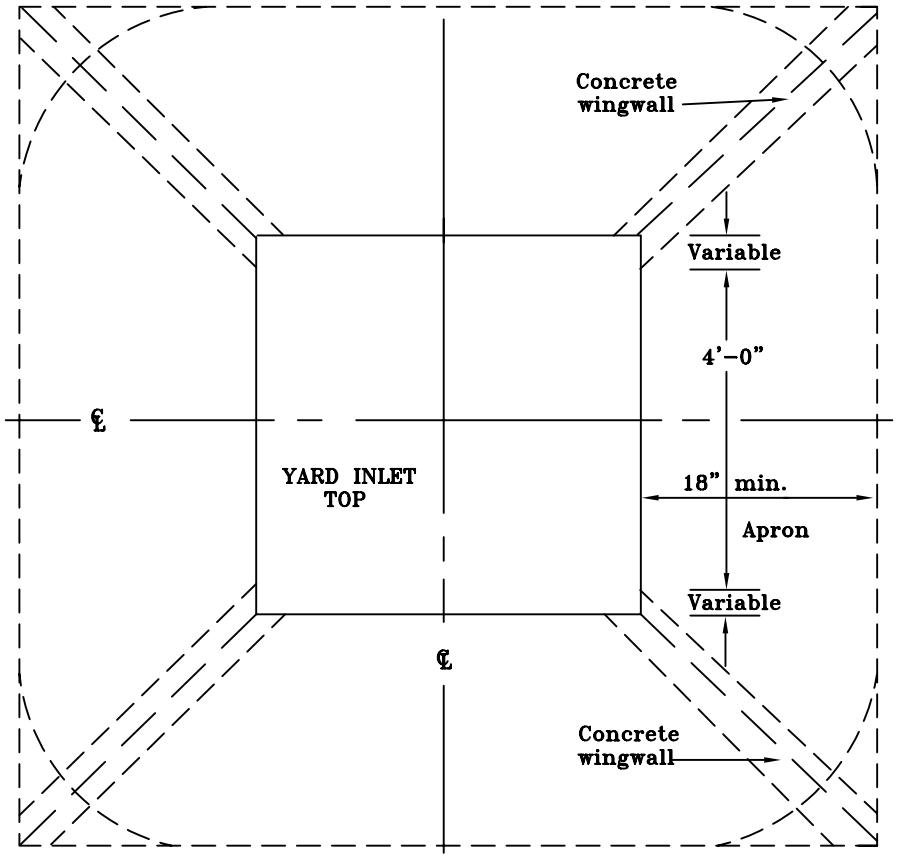

ALTERNATE STEP DETAIL

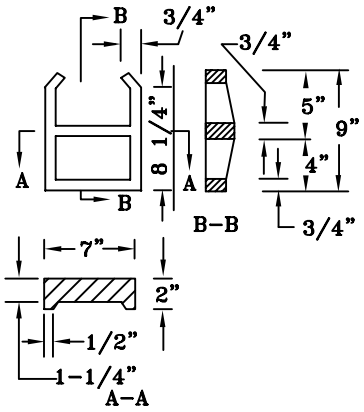

ANCHOR BAR DETAIL

PLAN

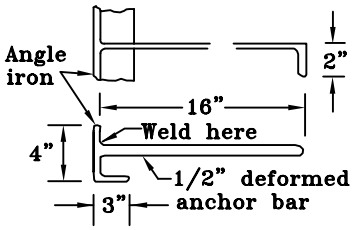

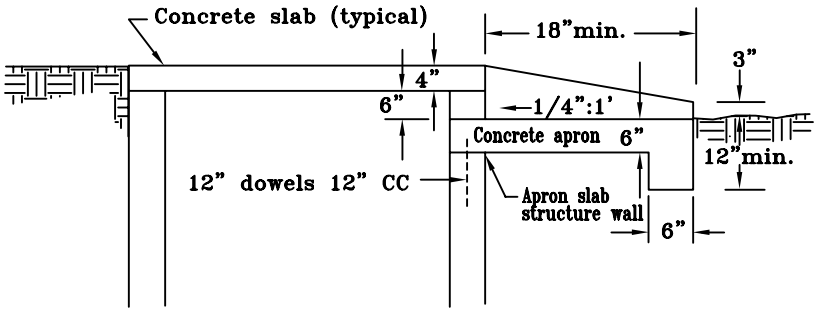

Note: The concrete apron may be poured-in-place or precast.

Note: Concrete aprons to be built on all yard inlets. Reinforcing shall be 6" X 6" No. 6 wire mesh. All concrete shall be Class A3. Length of apron may be increased to 36" if field conditions warrant.

Note: When aprons are on adjacent sides of inlet, the adjoining wingwalls will be omitted and apron shall have 1.5' radius. When inlet is larger than 5.0' X 5.0', opposite concrete aprons shall be built on centerline of inlet; 2 adjacent aprons shall be built adjoining the common corner; and if there are 3 or 4 concrete aprons on 1 inlet, then all aprons shall be built on centerline of inlet.

STEP DETAIL

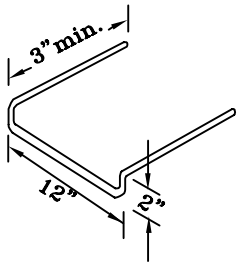

Step to extend 5" from inside face of manhole wall.

No. 6 galvanized Steel bar or No. 3 reinforcing rod completely encased in a corrosion resistant rubber, or other material approved by the Director.

Detail shown is for minimum step design. Alternates of equal or greater strength will be acceptable.

Ref. Sec. 6-1104.4, Plate 32-6 Rev. 1-00, 11-05, 2011 Reprint	TYPICAL CONCRETE APRON FOR YARD INLETS	PLATE NO.	STD. NO.
		33-6	YI-1

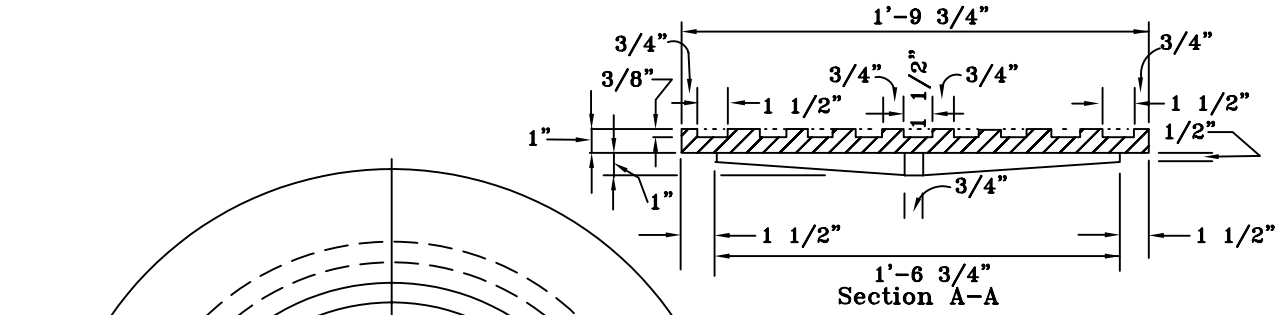

Section A-A

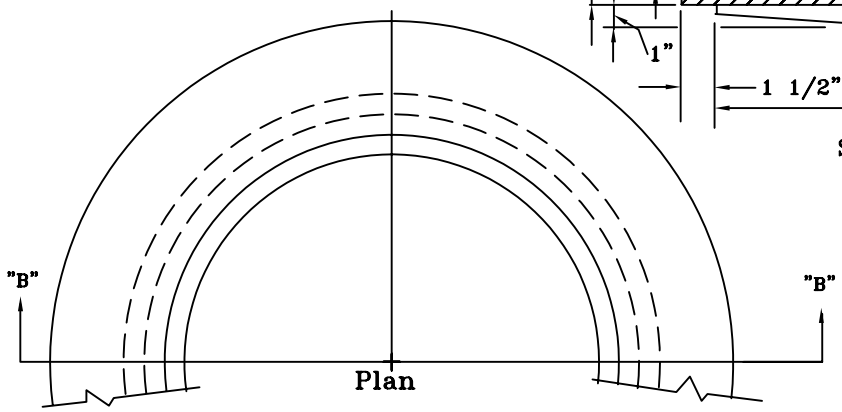

Plan

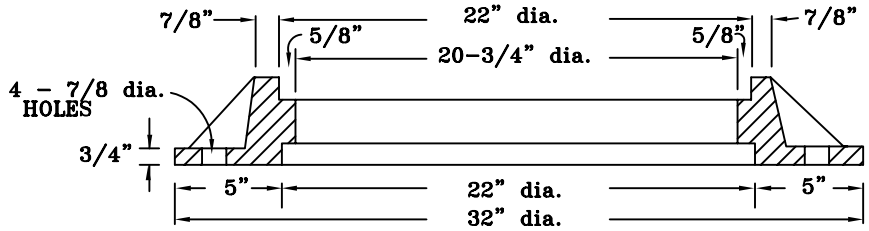

Section B-B

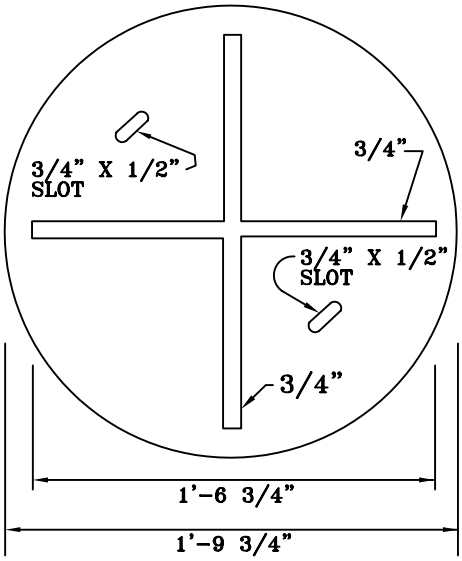

Bottom

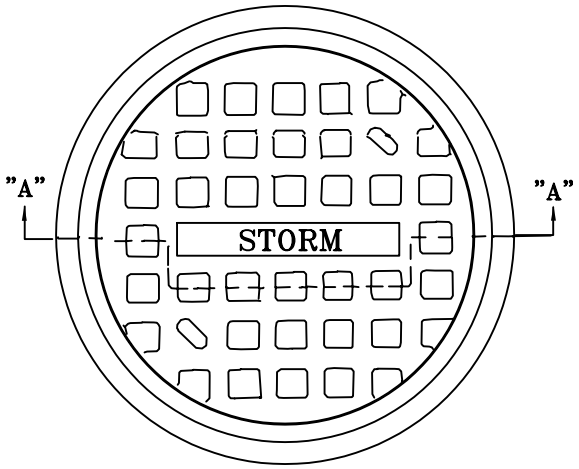

TOP

NOTE: The letters STORM are to be cast in the depression in top of cover 1" wide and raised 3/8" high as shown.

Ref. Sec. 6-1105.2 Rev. 1-00, 11-05, 2011 Reprint	STANDARD MANHOLE COVER & FRAME FOR USE IN EASEMENTS OUTSIDE OF VDOT RIGHT-OF-WAY	PLATE NO.	STD. NO.
		34-6	MH-1

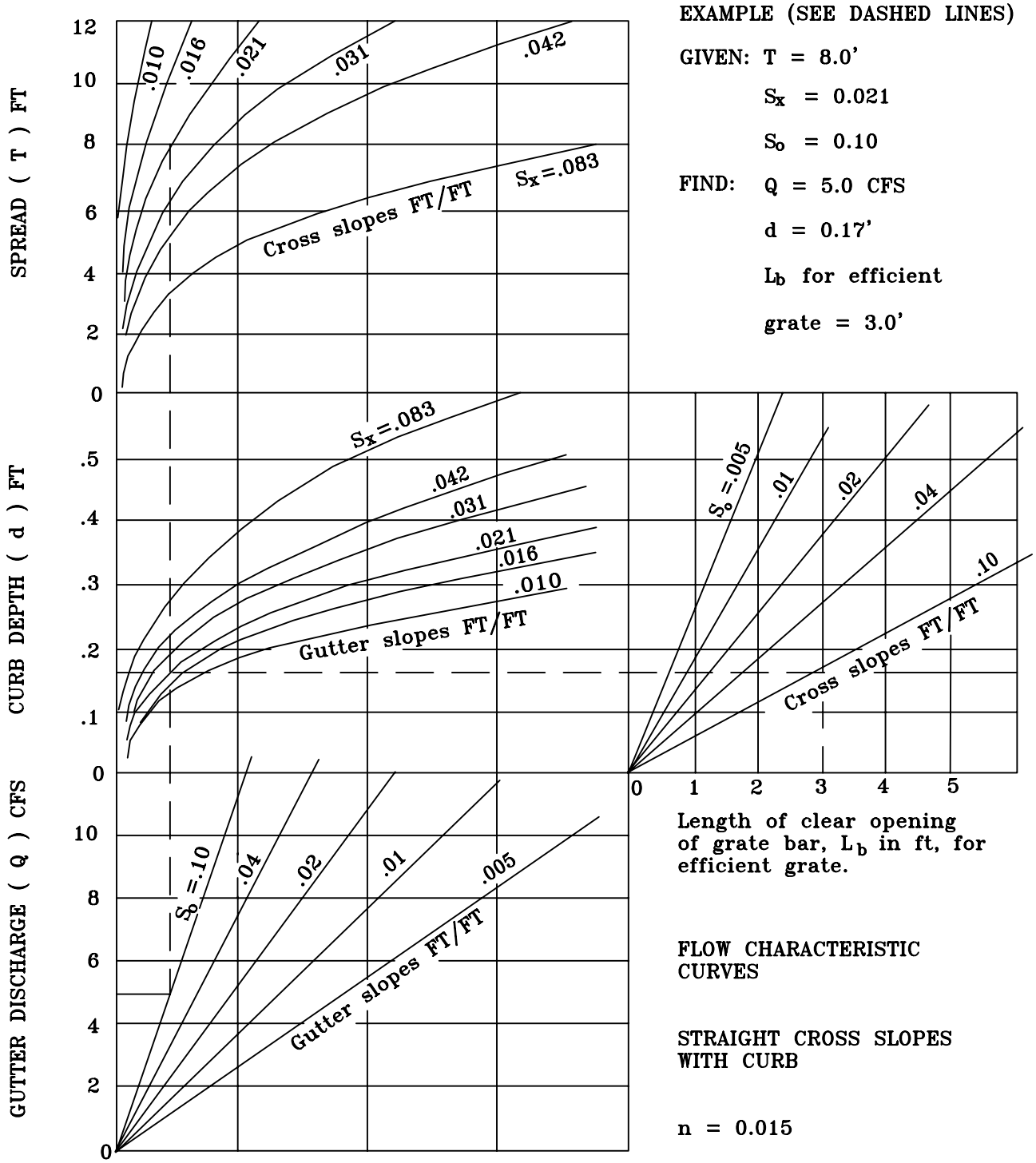

EXAMPLE (SEE DASHED LINES)

GIVEN: T = 8.0'

S_x = 0.021

S_o = 0.10

FIND: Q = 5.0 CFS

d = 0.17'

L_b for efficient grate = 3.0'

FLOW CHARACTERISTIC CURVES

STRAIGHT CROSS SLOPES WITH CURB

n = 0.015

Ref. Sec. 6-1106 Rev. 1-00, 11-05, 2011 Reprint	HYDRAULIC CAPACITY OF GRATE INLETS ON GRADES	PLATE NO.	STD. NO.
		35-6	

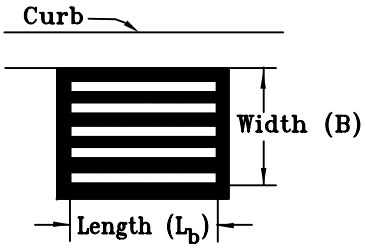

$P = 2B+L_b$
A = Area of clear opening in grate to allow for clogging divide P or A by 2 before obtaining d.
without curb $P = 2(B+L_b)$

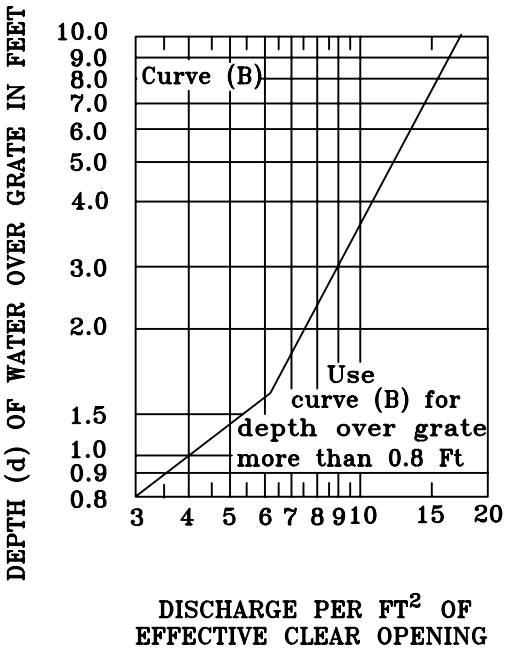

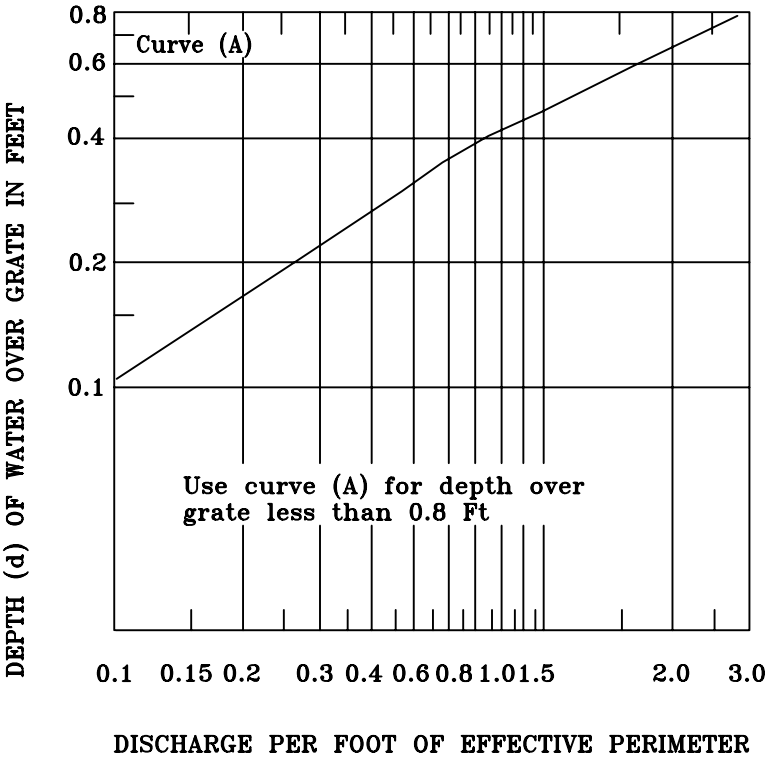

Ref. Sec. 6-1106 Rev. 1-00, 11-05, 2011 Reprint	HYDRAULIC CAPACITY OF GRATE INLET IN SUMP	PLATE NO.	STD. NO.
		36-6	

HYDRAULIC CHARACTERISTICS OF
ROOF DRAIN RINGS

WATER DEPTH AT INLET (INCHES)	CAPACITY THROUGH HOLES DISCHARGE (GPM)			
	1 SET HOLES	8 SETS	10 SETS	18 SETS
1.5	1	8	10	18
2.0	2	16	20	36
2.5	5	40	50	90
3.0	6	48	60	108

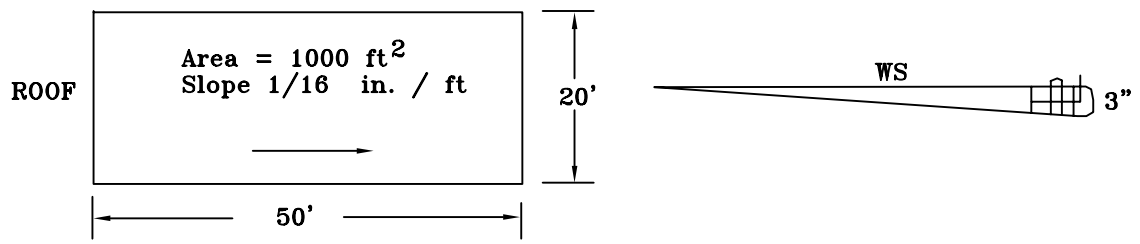

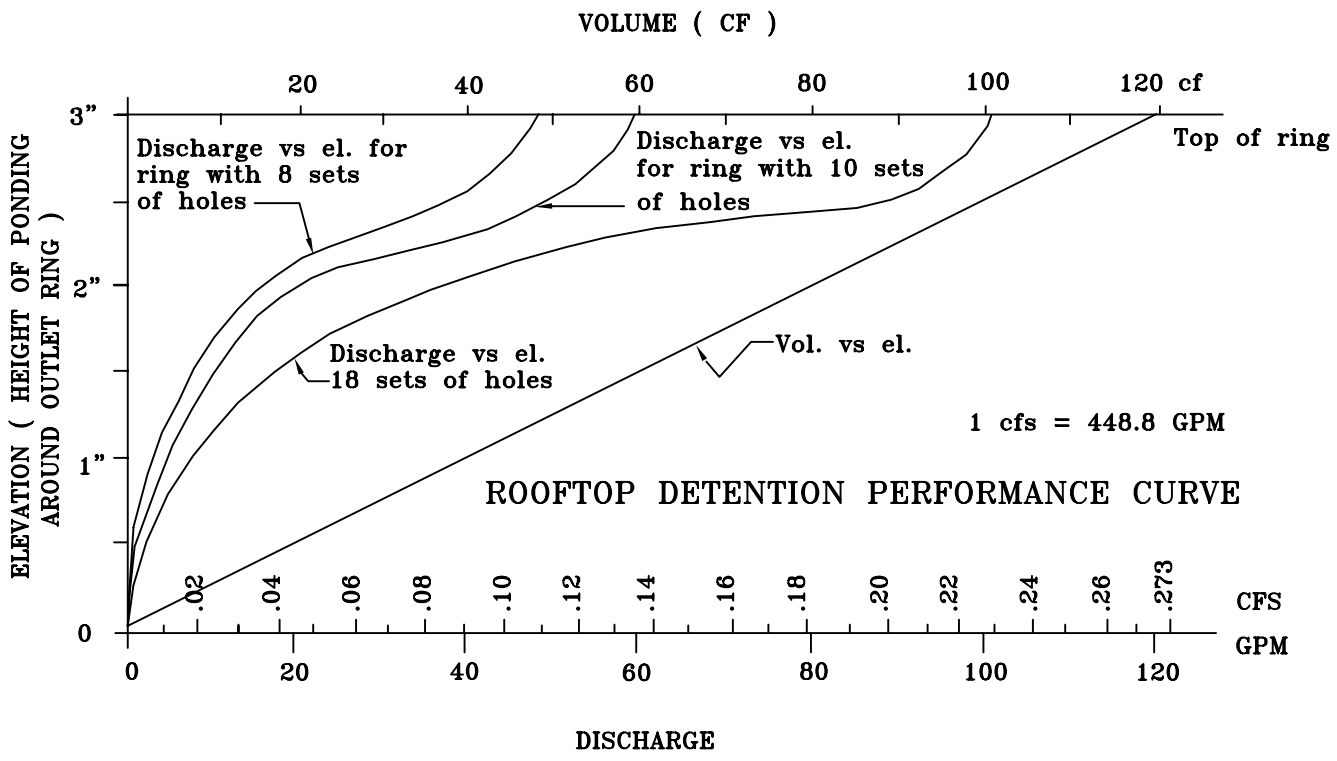

Ref. Sec. 6-1302.10D	ROOFTOP STORMWATER DETENTION	PLATE NO.	STD. NO.
Rev. 1-00		37-6	

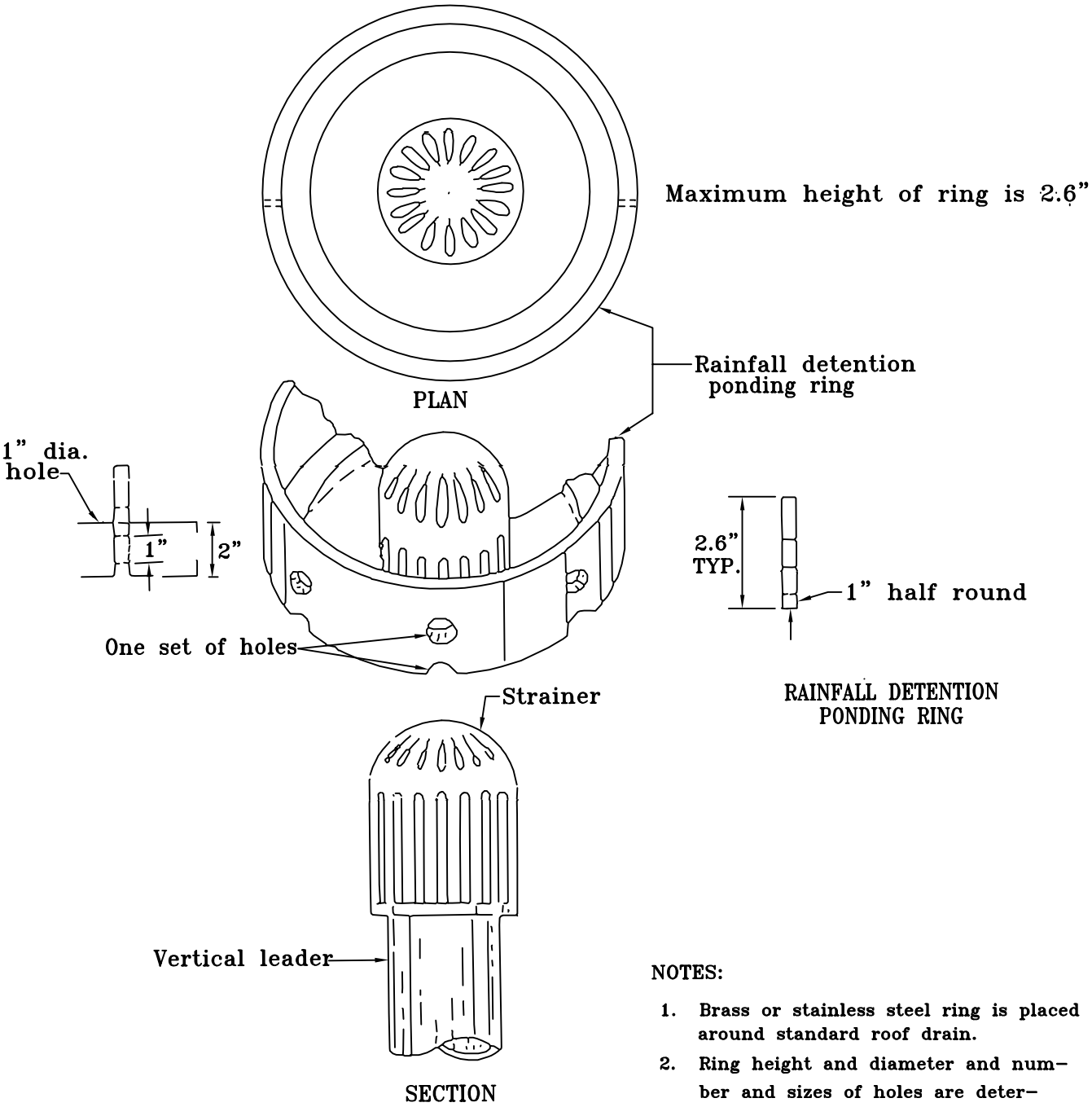

NOTES:

1. Brass or stainless steel ring is placed around standard roof drain.
2. Ring height and diameter and number and sizes of holes are determined by roof area drained, number of drains and rainfall design criteria.

Ref. Sec. 6-1302.10D Rev. 1-00, 2011 Reprint, 2-16	TYPICAL RAINFALL PONDING RING SECTIONS	PLATE NO.	STD. NO.
		38-6	

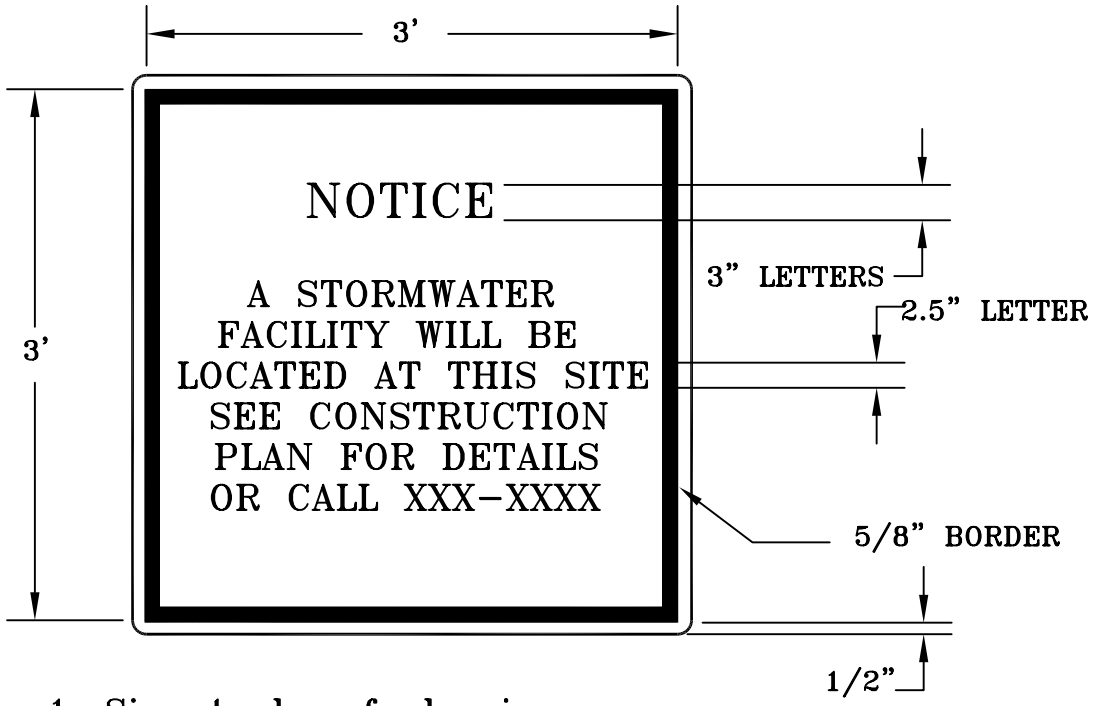

NOTE:
1. Sign to be of aluminum, flat blank, 0.08" thickness.
2. Letters and border white, background blue.
3. Phone number is of the Site Plan Review and Inspections Division, DPWES. (Current number is 324-1950, verify)

Ref. Sec. 6-1305.7F Rev. 1-00, 2011 Reprint	NOTICE OF LOCATION OF STORMWATER FACILITY	PLATE NO.	STD. NO.
		41B-6	SW-1

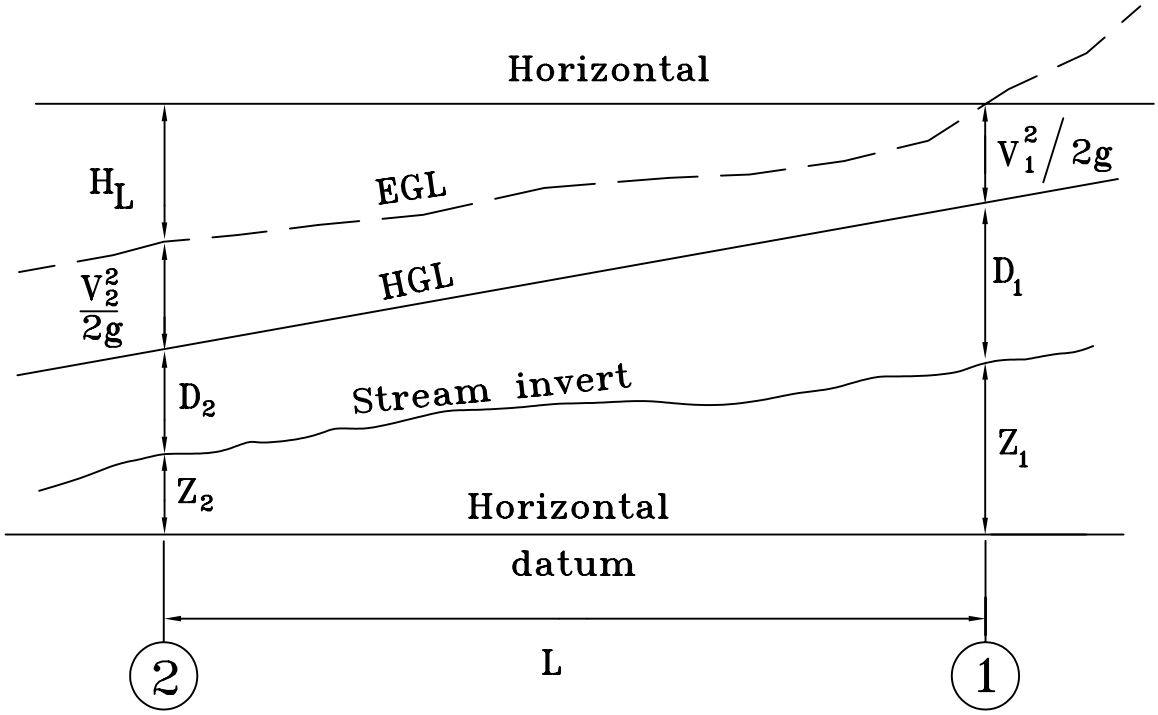

Z_2, Z_2 = Distance to upstream and downstream inverts

D_2, D_2 = Upstream and downstream depths of flow

$\frac{V_1^2}{2g}$, $\frac{V_2^2}{2g}$ = Upstream and downstream velocity head

H_L = Energy loss between upstream and downstream sections

L = Distance between upstream and downstream sections

Ref. Sec. 6-1403, 6-1403.2	FLOODPLAIN	PLATE NO.	STD. NO.
Rev. 1-00		45-6	

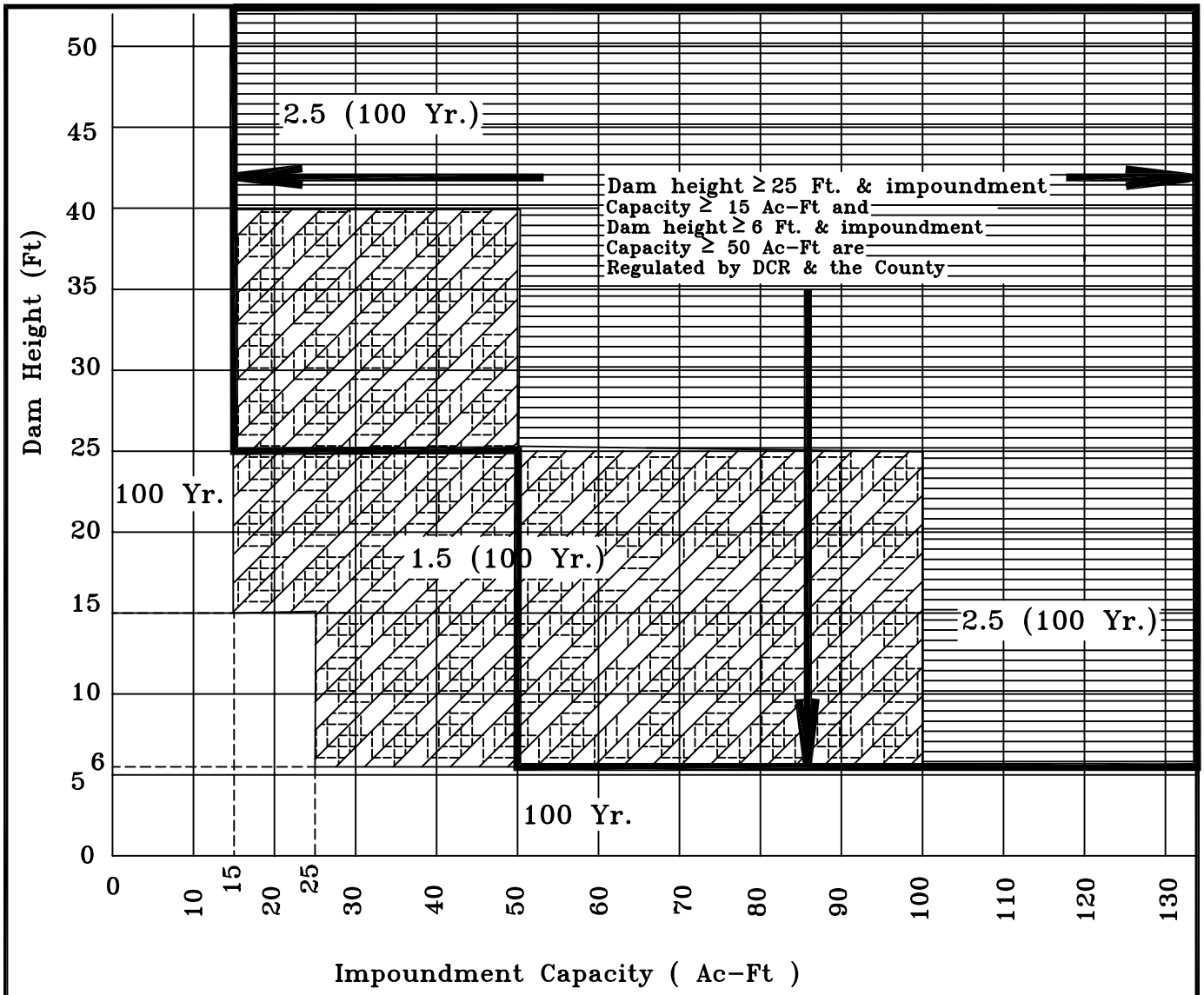

100 Yr., 24 Hr. = 8.41" (Ref: NWS NOAA Atlas 14)
PMP, 24 Hr. = 35.5" (Ref: NWS HMR-51)

<u>Design Storm Ranking*</u>

100 Yr.	≅	0.2 PMP
1.5 X (100 Yr.)	≅	0.3 PMP
2.5 X (100 Yr.)	≅	0.5 PMP
3.5 X (100 Yr.)	≅	0.7 PMP
5.0 X (100 Yr.)	≅	1.0 PMP

*The above ranking shall be used when selecting 'Next Highest Storm' for freeboard hydrograph

Ref. Sec. 6-1603.1A, 6-1603.1B, 6-1603.4B, 6-1603.4E, 6-1601.1 Rev. 1-00, 1-04, 2011 Reprint, 2-16	24 HOUR DESIGN STORM CHART FOR SPILLWAY DESIGN FLOOD (SDF)	PLATE NO. 46-6	STD. NO.

Time (hour)	Incre. Precip. (%)	Cum. Precip. (%)	Time (hour)	Incre. Precip. (%)	Cum. Precip. (%)	Time (hour)	Incre. Precip. (%)	Cum. Precip. (%)	Time (hour)	Incre. Precip. (%)	Cum. Precip. (%)
0.0	0.000	0.000	3.0	0.131	3.528	6.0	0.161	7.925	9.0	0.281	14.605
0.1	0.128	0.128	3.1	0.132	3.660	6.1	0.165	8.090	9.1	0.295	14.900
0.2	0.103	0.231	3.2	0.133	3.793	6.2	0.169	8.259	9.2	0.310	15.210
0.3	0.104	0.335	3.3	0.134	3.927	6.3	0.173	8.432	9.3	0.326	15.536
0.4	0.106	0.441	3.4	0.135	4.062	6.4	0.177	8.609	9.4	0.340	15.876
0.5	0.106	0.547	3.5	0.137	4.199	6.5	0.181	8.790	9.5	0.355	16.231
0.6	0.107	0.654	3.6	0.137	4.336	6.6	0.185	8.975	9.6	0.371	16.602
0.7	0.109	0.763	3.7	0.138	4.474	6.7	0.189	9.164	9.7	0.385	16.987
0.8	0.109	0.872	3.8	0.139	4.613	6.8	0.192	9.356	9.8	0.400	17.387
0.9	0.110	0.982	3.9	0.140	4.753	6.9	0.197	9.553	9.9	0.416	17.803
1.0	0.111	1.093	4.0	0.141	4.894	7.0	0.201	9.754	10.0	0.430	18.233
1.1	0.113	1.206	4.1	0.142	5.036	7.1	0.205	9.959	10.1	0.445	18.678
1.2	0.113	1.319	4.2	0.143	5.179	7.2	0.209	10.168	10.2	0.461	19.139
1.3	0.114	1.433	4.3	0.145	5.324	7.3	0.212	10.380	10.3	0.475	19.614
1.4	0.115	1.548	4.4	0.145	5.469	7.4	0.217	10.597	10.4	0.490	20.104
1.5	0.117	1.665	4.5	0.146	5.615	7.5	0.221	10.818	10.5	0.506	20.610
1.6	0.117	1.782	4.6	0.147	5.762	7.6	0.224	11.042	10.6	0.563	21.173
1.7	0.118	1.900	4.7	0.148	5.910	7.7	0.229	11.271	10.7	0.620	21.793
1.8	0.119	2.019	4.8	0.149	6.059	7.8	0.232	11.503	10.8	0.678	22.472
1.9	0.121	2.140	4.9	0.150	6.209	7.9	0.237	11.740	10.9	0.735	23.206
2.0	0.121	2.261	5.0	0.151	6.360	8.0	0.241	11.981	11.0	0.793	23.999
2.1	0.122	2.383	5.1	0.152	6.512	8.1	0.244	12.225	11.1	0.900	24.899
2.2	0.123	2.506	5.2	0.153	6.665	8.2	0.249	12.474	11.2	1.008	25.907
2.3	0.125	2.631	5.3	0.154	6.819	8.3	0.252	12.726	11.3	1.115	27.022
2.4	0.125	2.756	5.4	0.155	6.974	8.4	0.256	12.982	11.4	1.223	28.245
2.5	0.126	2.882	5.5	0.156	7.130	8.5	0.261	13.243	11.5	1.305	29.550
2.6	0.127	3.009	5.6	0.157	7.287	8.6	0.264	13.507	11.6	2.022	31.572
2.7	0.128	3.137	5.7	0.158	7.445	8.7	0.269	13.776	11.7	2.128	33.700
2.8	0.130	3.267	5.8	0.159	7.604	8.8	0.272	14.048	11.8	2.918	36.618
2.9	0.130	3.397	5.9	0.160	7.764	8.9	0.276	14.324	11.9	4.051	40.669

Source: NOAA_C Rainfall Distribution

Time (hour)	Incre. Precip. (%)	Cum. Precip. (%)	Time (hour)	Incre. Precip. (%)	Cum. Precip. (%)	Time (hour)	Incre. Precip. (%)	Cum. Precip. (%)	Time (hour)	Incre. Precip. (%)	Cum. Precip. (%)
12.0	6.991	47.660	15.0	0.295	85.395	18.0	0.165	92.075	21.0	0.132	96.472
12.1	11.671	59.331	15.1	0.281	85.676	18.1	0.161	92.236	21.1	0.131	96.603
12.2	4.051	63.382	15.2	0.276	85.952	18.2	0.160	92.396	21.2	0.130	96.733
12.3	2.918	66.300	15.3	0.272	86.224	18.3	0.159	92.555	21.3	0.130	96.863
12.4	2.128	68.428	15.4	0.269	86.493	18.4	0.158	92.713	21.4	0.128	96.991
12.5	2.022	70.450	15.5	0.264	86.757	18.5	0.157	92.870	21.5	0.127	97.118
12.6	1.305	71.755	15.6	0.261	87.018	18.6	0.156	93.026	21.6	0.126	97.244
12.7	1.223	72.978	15.7	0.256	87.274	18.7	0.155	93.181	21.7	0.125	97.369
12.8	1.115	74.093	15.8	0.252	87.526	18.8	0.154	93.335	21.8	0.125	97.494
12.9	1.008	75.101	15.9	0.249	87.775	18.9	0.153	93.488	21.9	0.123	97.617
13.0	0.900	76.001	16.0	0.244	88.019	19.0	0.152	93.640	22.0	0.122	97.739
13.1	0.793	76.794	16.1	0.241	88.260	19.1	0.151	93.791	22.1	0.121	97.860
13.2	0.735	77.529	16.2	0.237	88.497	19.2	0.150	93.941	22.2	0.121	97.981
13.3	0.678	78.207	16.3	0.232	88.729	19.3	0.149	94.090	22.3	0.119	98.100
13.4	0.620	78.827	16.4	0.229	88.958	19.4	0.148	94.238	22.4	0.118	98.218
13.5	0.563	79.390	16.5	0.224	89.182	19.5	0.147	94.385	22.5	0.117	98.335
13.6	0.506	79.896	16.6	0.221	89.403	19.6	0.146	94.531	22.6	0.117	98.452
13.7	0.490	80.386	16.7	0.217	89.620	19.7	0.145	94.676	22.7	0.115	98.567
13.8	0.475	80.861	16.8	0.212	89.832	19.8	0.145	94.821	22.8	0.114	98.681
13.9	0.461	81.322	16.9	0.209	90.041	19.9	0.143	94.964	22.9	0.113	98.794
14.0	0.445	81.767	17.0	0.205	90.246	20.0	0.142	95.106	23.0	0.113	98.907
14.1	0.430	82.197	17.1	0.201	90.447	20.1	0.141	95.247	23.1	0.111	99.018
14.2	0.416	82.613	17.2	0.197	90.644	20.2	0.140	95.387	23.2	0.110	99.128
14.3	0.400	83.013	17.3	0.192	90.836	20.3	0.139	95.526	23.3	0.109	99.237
14.4	0.385	83.398	17.4	0.189	91.025	20.4	0.138	95.664	23.4	0.109	99.346
14.5	0.371	83.769	17.5	0.185	91.210	20.5	0.137	95.801	23.5	0.107	99.453
14.6	0.355	84.124	17.6	0.181	91.391	20.6	0.137	95.938	23.6	0.106	99.559
14.7	0.340	84.464	17.7	0.177	91.568	20.7	0.135	96.073	23.7	0.106	99.665
14.8	0.326	84.790	17.8	0.173	91.741	20.8	0.134	96.207	23.8	0.104	99.769
14.9	0.310	85.100	17.9	0.169	91.910	20.9	0.133	96.340	23.9	0.103	99.872
									24.0	0.128	100.000

Source: NOAA_C Rainfall Distribution

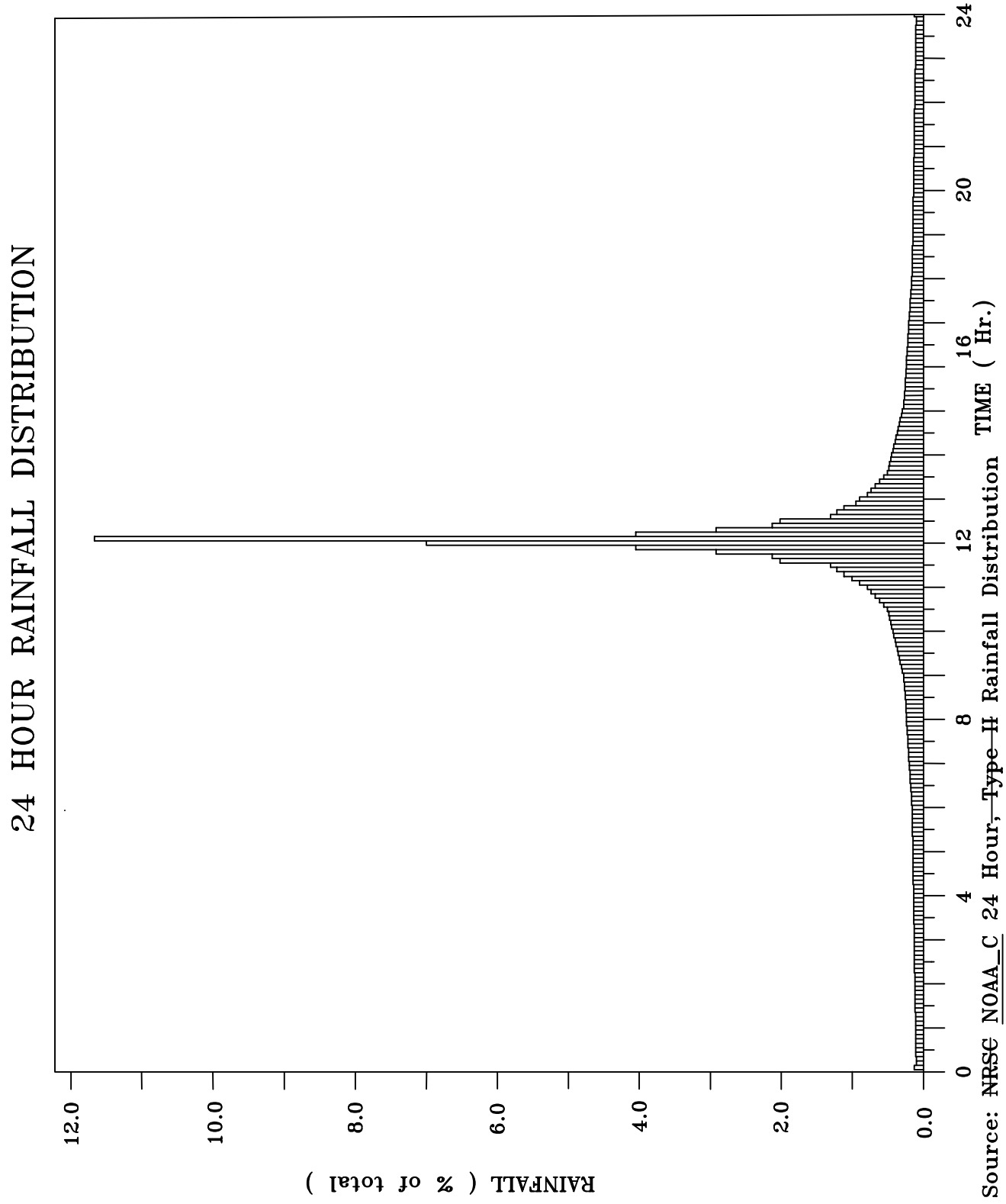

Ref. Sec. 6-0802, 6-1603.1A Rev. 1-00, 2011 Reprint, 2-16	24 HOUR RAINFALL DISTRIBUTION (HYETOGRAPH)	PLATE NO. 48-6	STD. NO.

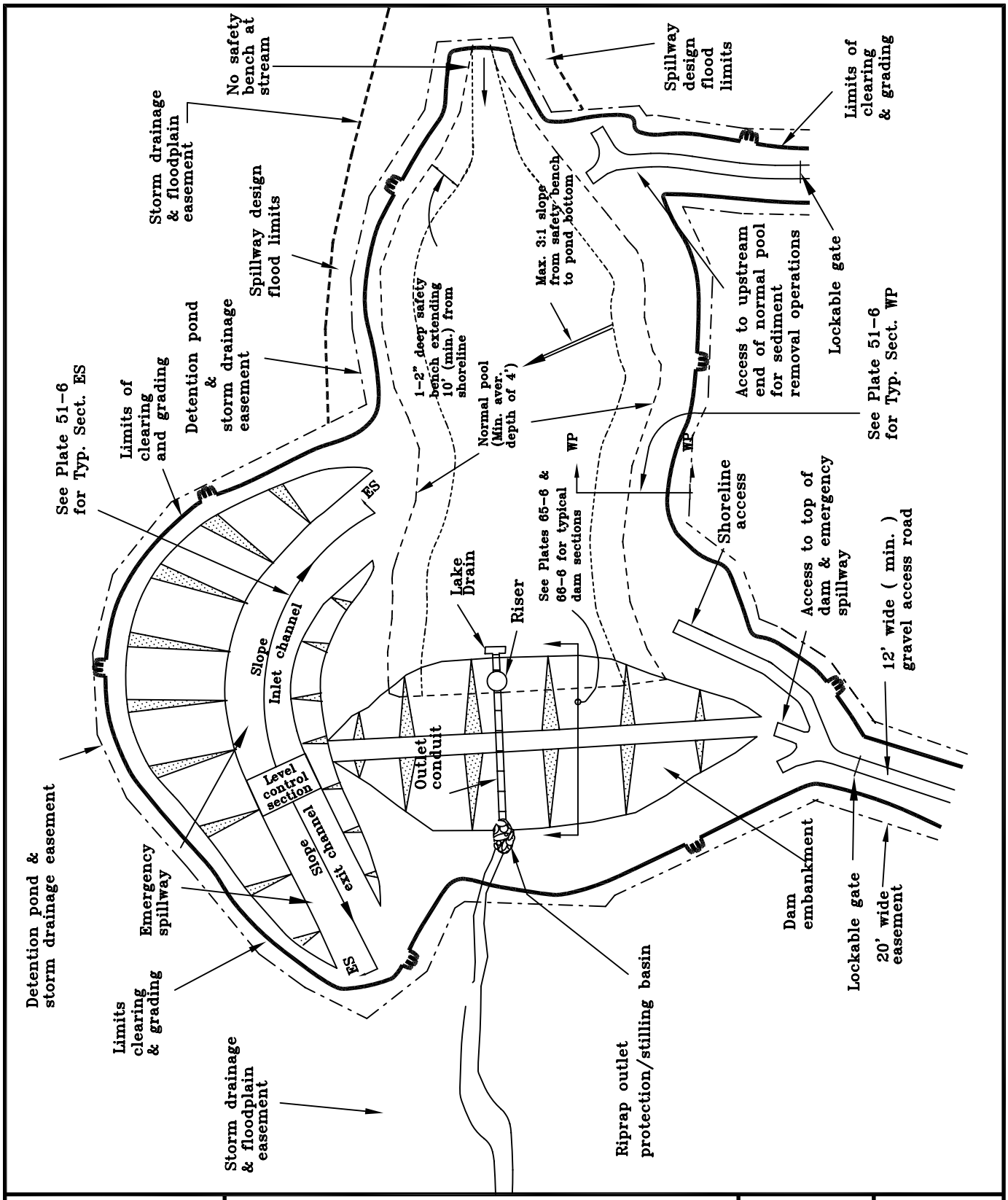

Ref. Sec. 6-1604.2, 6-1604.2A(4), 6-1606.2G	TYPICAL WET (RETENTION) POND LAYOUT SHOWING KEY ELEMENTS	PLATE NO.	STD. NO.
Rev. 1-00, 2011 Reprint		49-6	

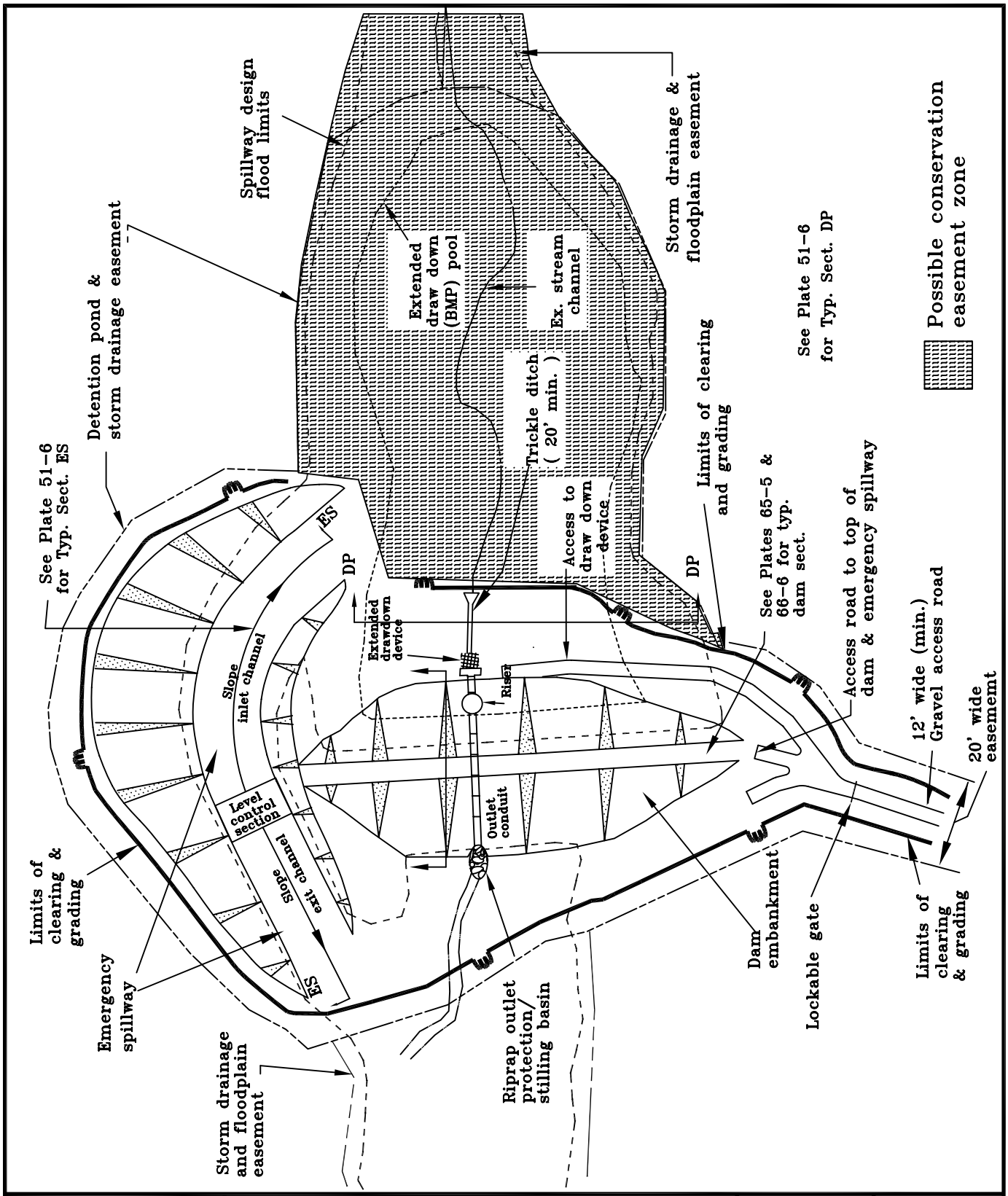

Ref. Sec. 6-1604.2, 6-1604.2A(4), 6-1606.2G Rev. 1-00, 2011 Reprint	TYPICAL DRY OR EXTENDED DRY (DETENTION) POND LAYOUT KEY ELEMENTS	PLATE NO. 50-6	STD. NO.

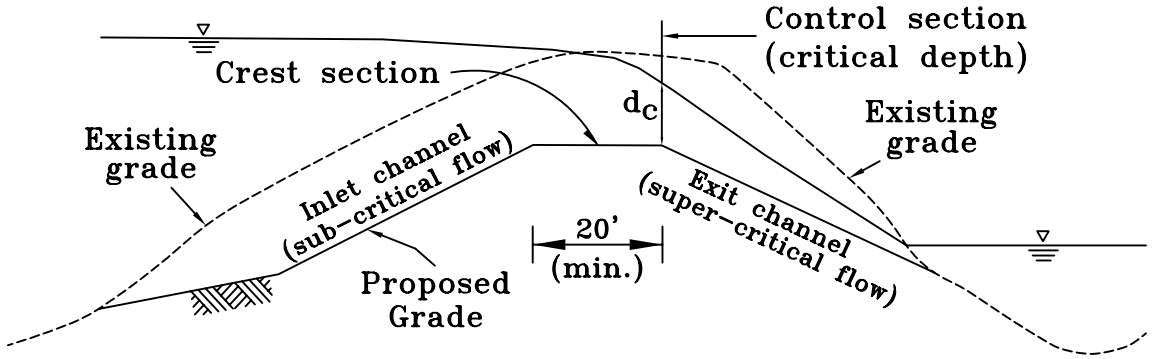

Vegetated Emergency Spillway
(Sect. ES)

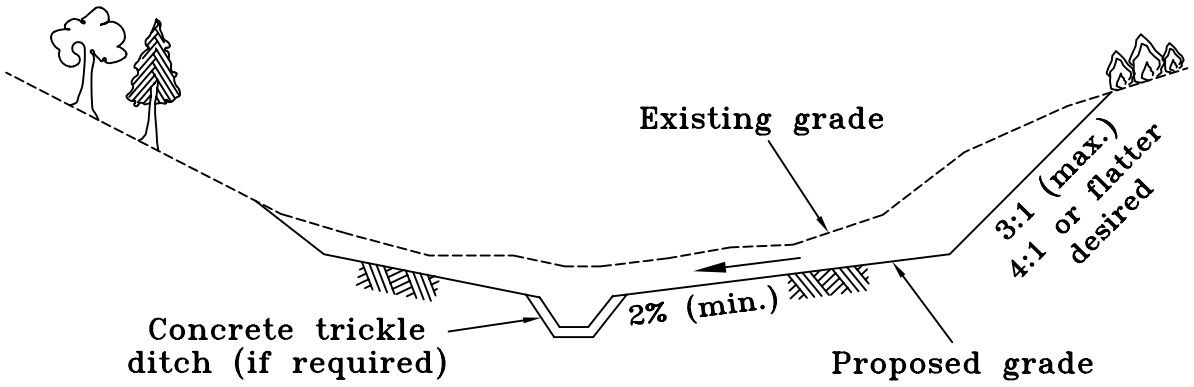

Dry Detention Pond
(Sect. DP)

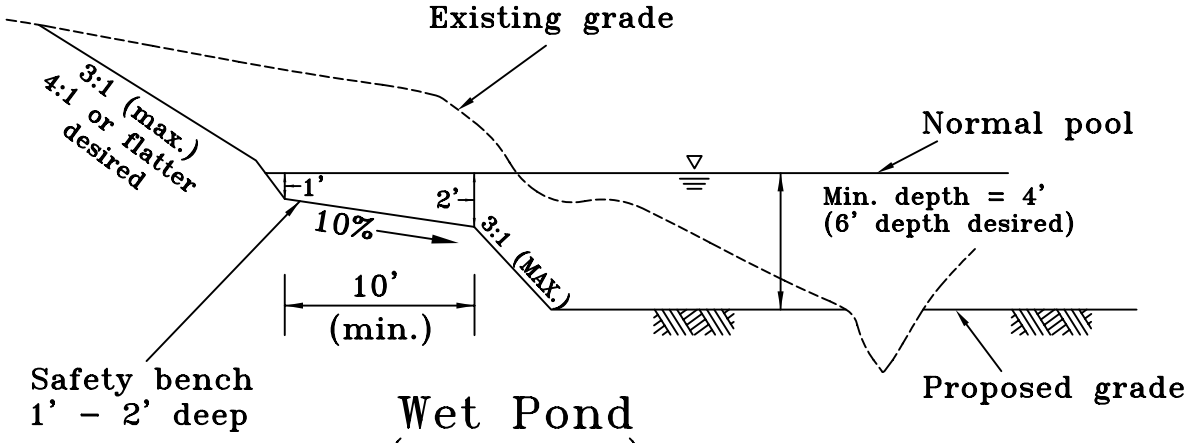

Wet Pond
(Sect. WP)

Ref. Sec. 6-1604.2, 6-1604.2B(2), Plates 49-6, 50-6, 56-6, 57-6 Rev. 1-00, 2011 Reprint	TYPICAL SECTIONS AT STORMWATER MANAGEMENT FACILITIES	PLATE NO. 51-6	STD. NO.

Permissible Velocities for Vegetated Spillways[1]

	Permissible Velocity[2] FPS			
	Erosion Resistant[3] Soils		Easily Erodible[3] Soils	
	Slope of Exit Channel %		Slope of Exit Channel %	
	0 to 5	5 thru 10	0 to 5	5 thru 10
Buffalograss Kentucky bluegrass Smooth bluegrass Tall fescue Reed canarygrass	7	6	5	4
Sod forming grass–legume mixtures	5	4	4	3
Lespedeza sericea Weeping lovegrass Yellow bluestem native grass mixtures	3.5	3.5	2.5	2.5

[1] NRCS–TP–61

[2] Increase values 10% when the anticipated average use of the spillway is not more frequent than once in 50 yrs. or, 25% when the anticipated average use is not more frequent than once in 100 yr.

[3] As defined in TR–52

Source: NRCS TR–60 – Earth Dams and Reservoirs, October 1985

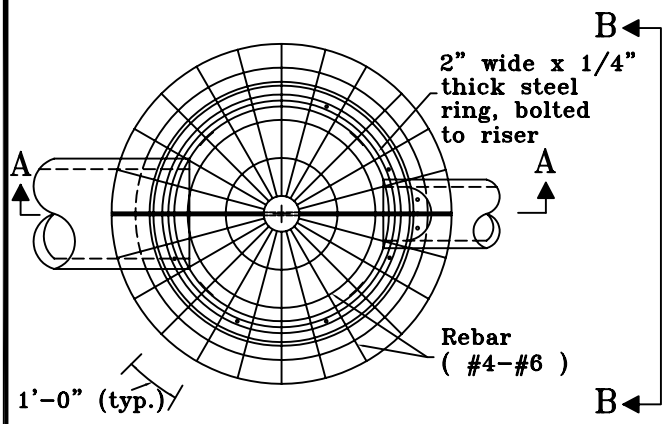

Top View

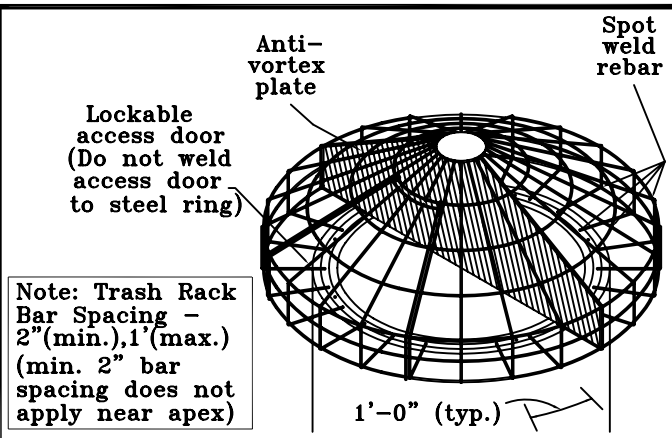

Trash Rack Detail

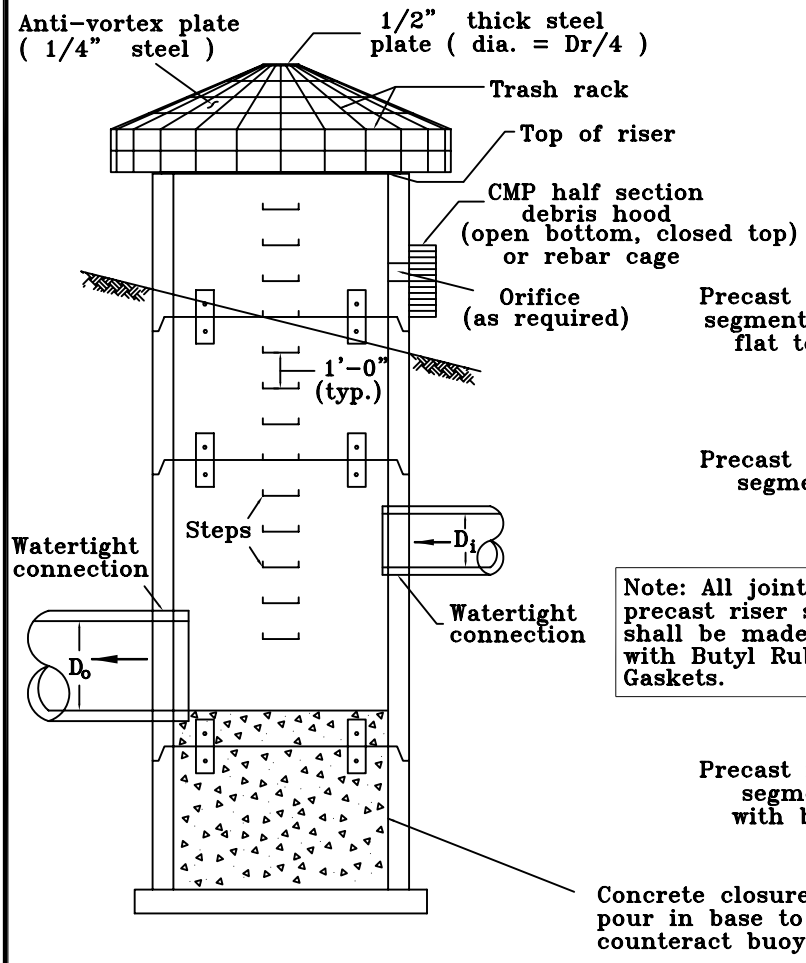

Sect."A-A"

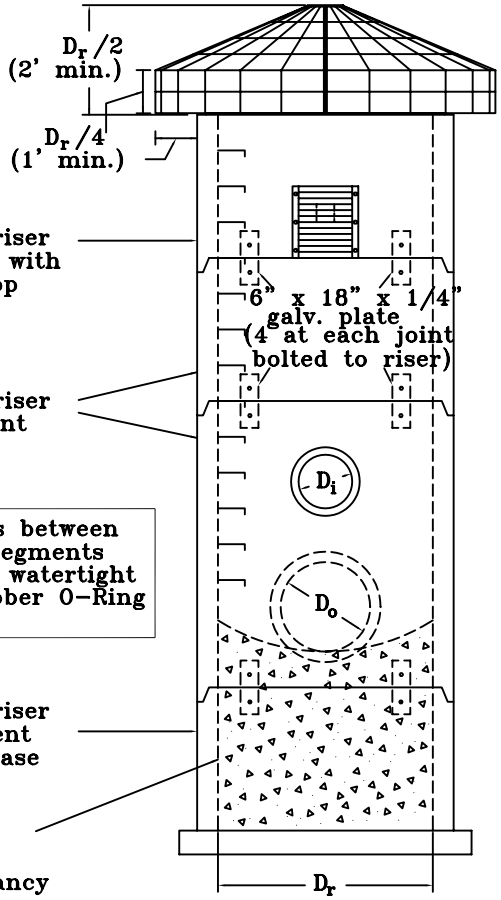

Elev. "B-B"

Note: All joints between precast riser segments shall be made watertight with Butyl Rubber O-Ring Gaskets.

Ref. Sec. 6-1604.4, 6-1604.8A, 6-1604.8E, 6-1604.9 Rev. 1-00	SCHEMATIC DETAIL OF PRE-CAST CIRCULAR RISER AND TRASH RACK FOR USE WITH DRY OR EXTENDED DRY DETENTION PONDS	PLATE NO.	STD. NO.
		53-6	

Trash rack bar spacing: 2" (min.), 1' (max.)

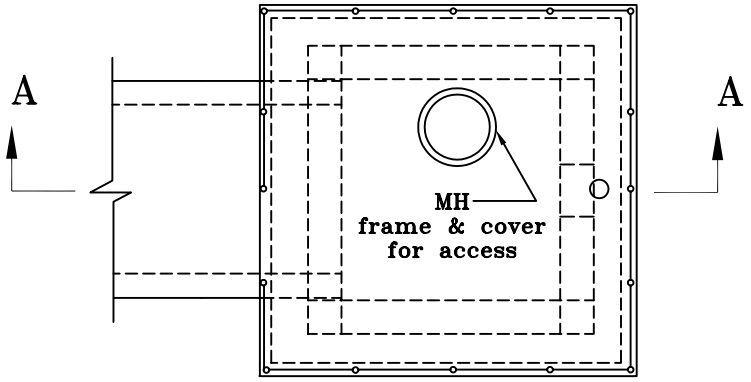

Plan View

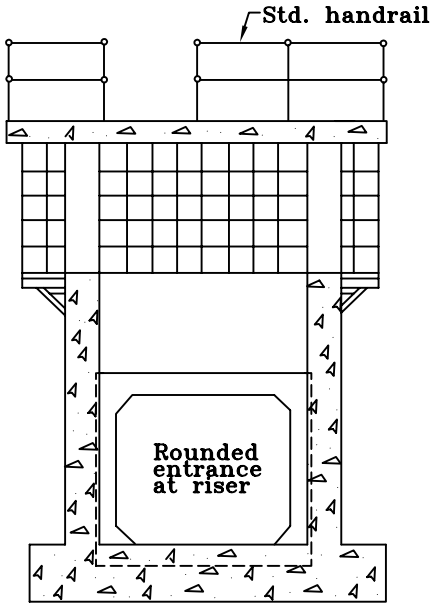

Sec. B–B

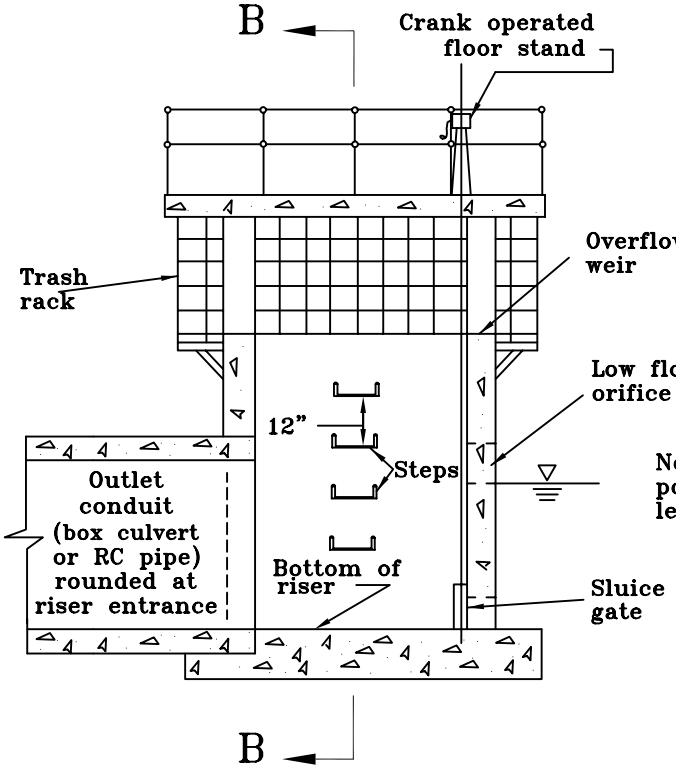

Sect. A–A

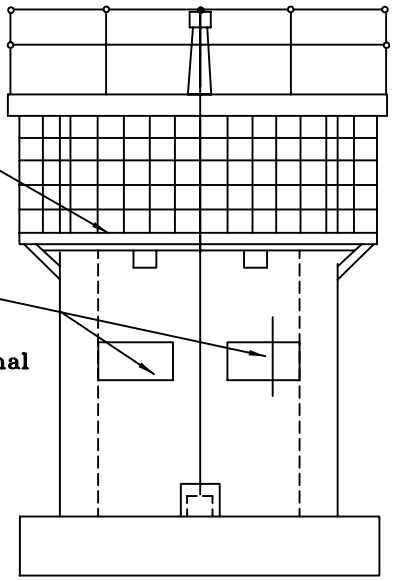

Front View

Note:
Sluice gate application applies to wet ponds only.
If riser is used for extended dry pond or dry detention, an orifice would replace the sluice gate.

Ref. Sec. 6–1604.4, 6–1604.8E, 6–1604.9, Plate 55–6 Rev. 1–00, 2011 Reprint	SCHEMATIC DETAIL OF STANDARD CAST IN PLACE RECTANGULAR RISER AND TRASH RACK FOR USE WITH WET OR DRY PONDS	PLATE NO.	STD. NO.
		54–6	

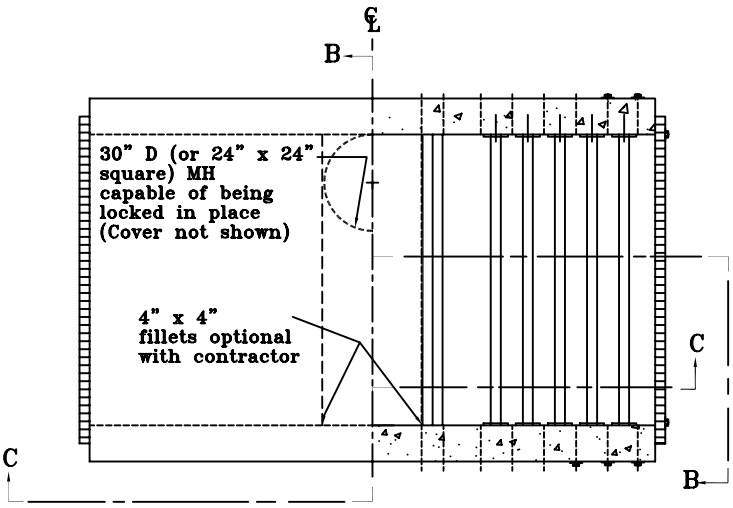

Sec. A–A

Footing and Spigot Wall Fitting Not Shown

Note: This detail is taken from the NRCS Std. Dwg. ES–150. "Drop Inlet Spillways – Standard for Covered Top Riser". See ES–150 for more detail.

Note: For wet pond applicaiton a sluice gate shall be provided on the inside of the riser similar to that shown on Plate 54–6.

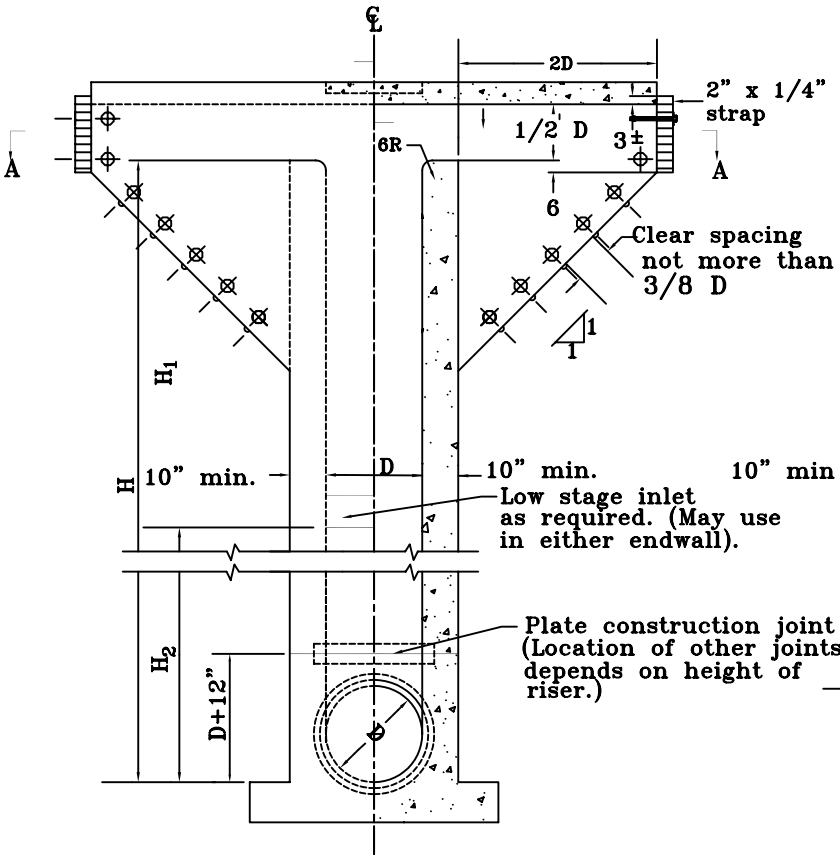

Sec. C–C

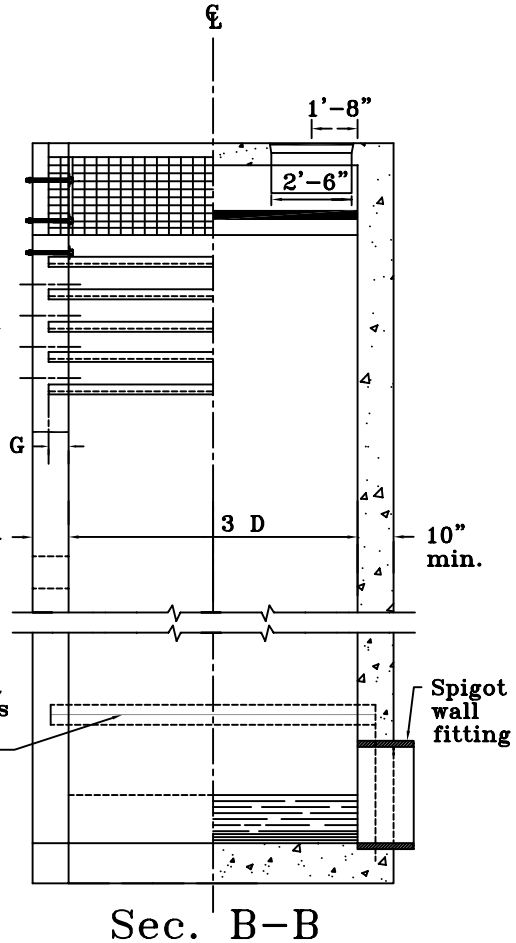

Sec. B–B

Ref. Sec. 6–1604.4, 6–1604.8E, 6–1604.9 Rev. 1–00, 2011 Reprint	SCS STANDARD 2–WAY COVERED RISER FOR USE WITH WET OR DRY PONDS	PLATE NO.	STD. NO.
		55–6	

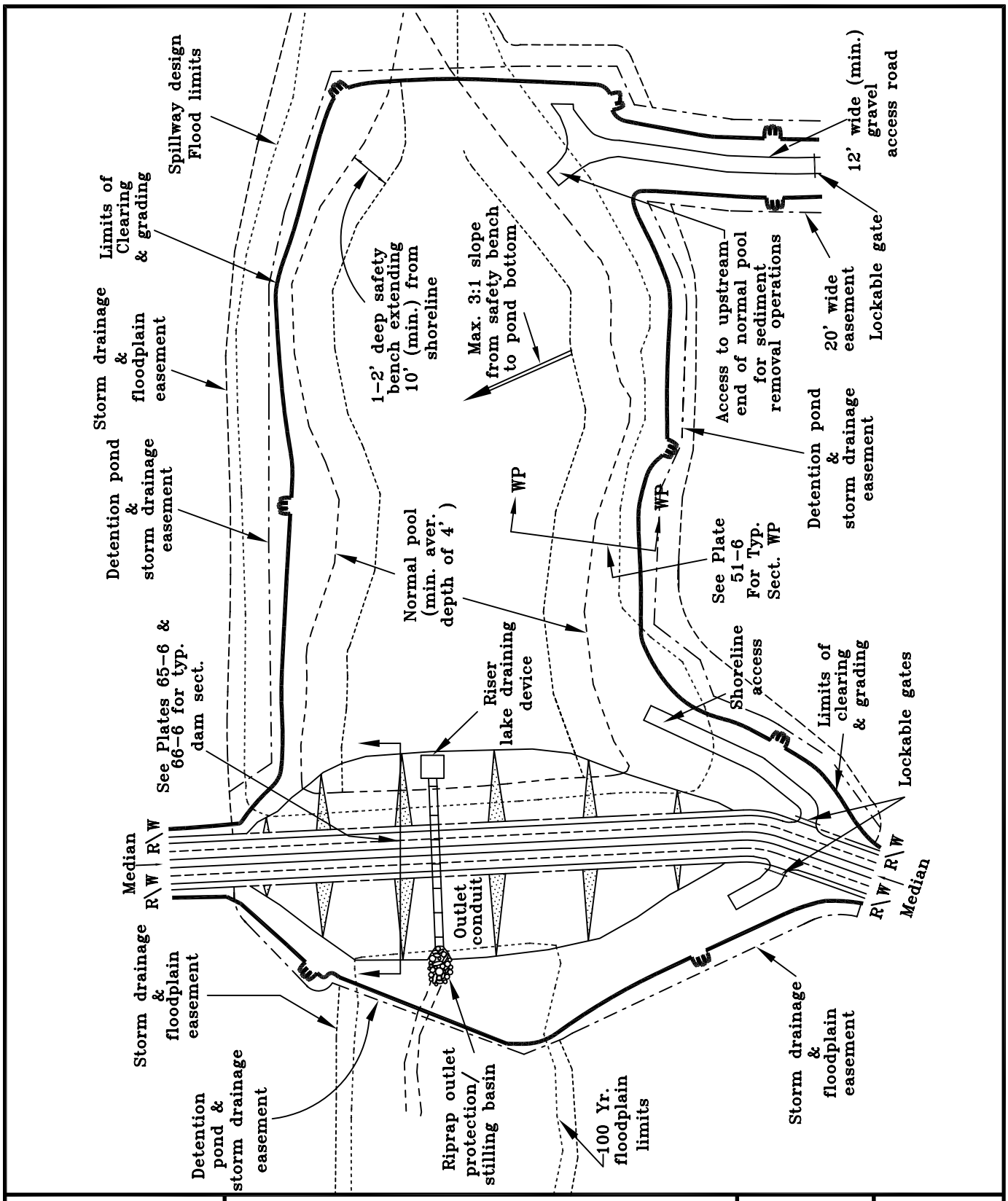

Ref. Sec. 6-1604.6, 6-1606.2G	TYPICAL WET (RETENTION) POND LAYOUT WHEN USING ROADWAY EMBANKMENTS AS DAMS	PLATE NO.	STD. NO.
Rev. 1-00, 2011 Reprint		56-6	

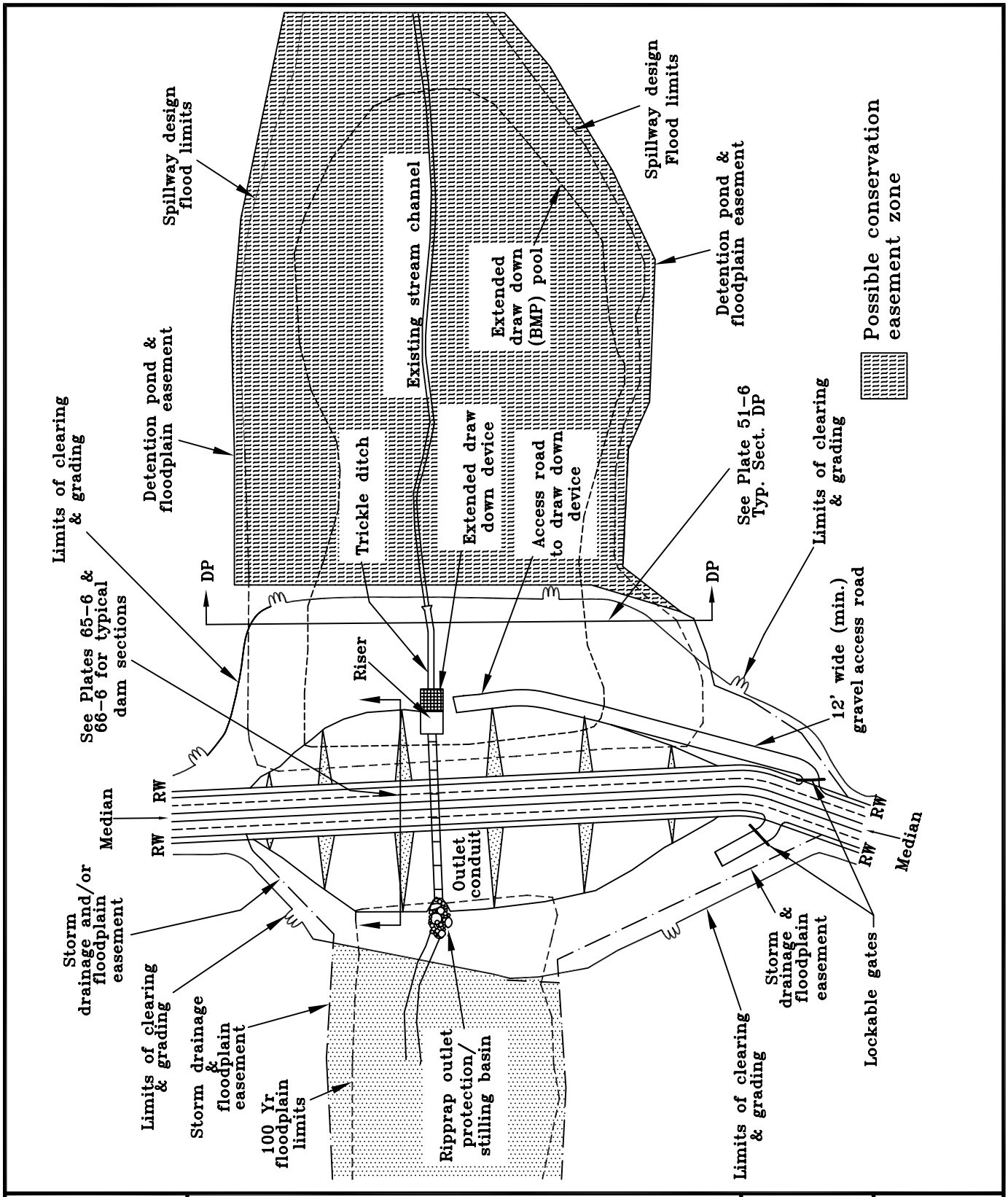

Ref. Sec. 6-1604.6, 6-1606.2G	TYPICAL DRY OR EXTENDED DRY (DETENTION) POND LAYOUT WHEN USING ROADWAY EMBANKMENTS AS DAM	PLATE NO.	STD. NO.
Rev. 1-00		57-6	

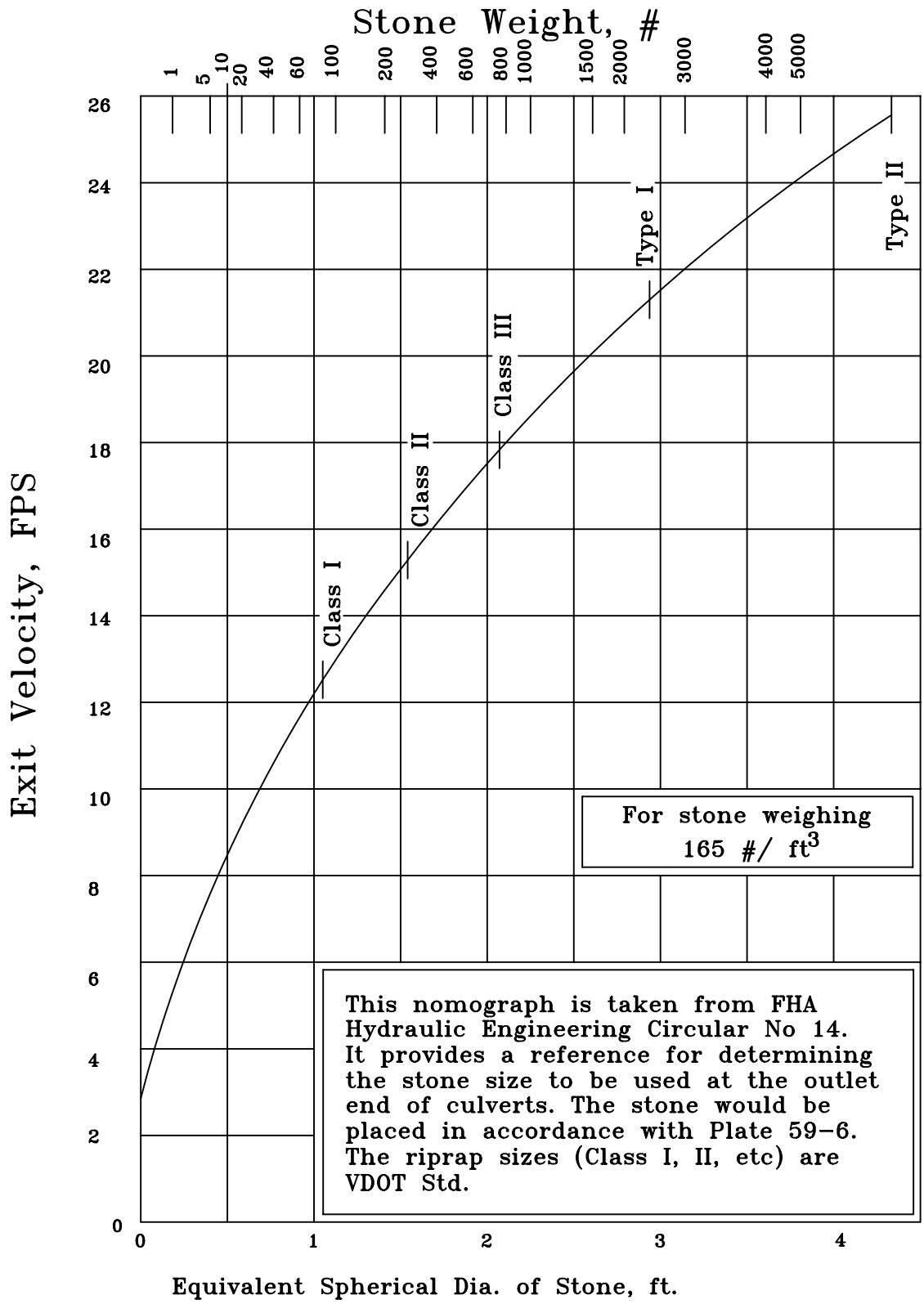

Ref. Sec. 6-1604.7A(2), 6-1604.7A(3), 6-1604.7A(4) Rev. 1-00	RIPRAP SIZE FOR USE DOWNSTREAM OF ENERGY DISSIPATORS	PLATE NO. 58-6	STD. NO.

Plan

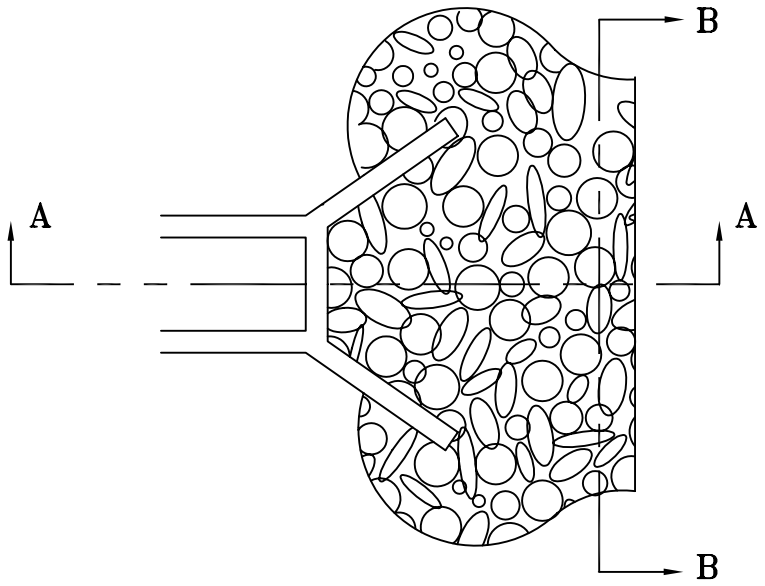

Sect. A–A

L* – Length of riprap to be at least 4D & may be longer in accordance with Sect. 6–1604.7

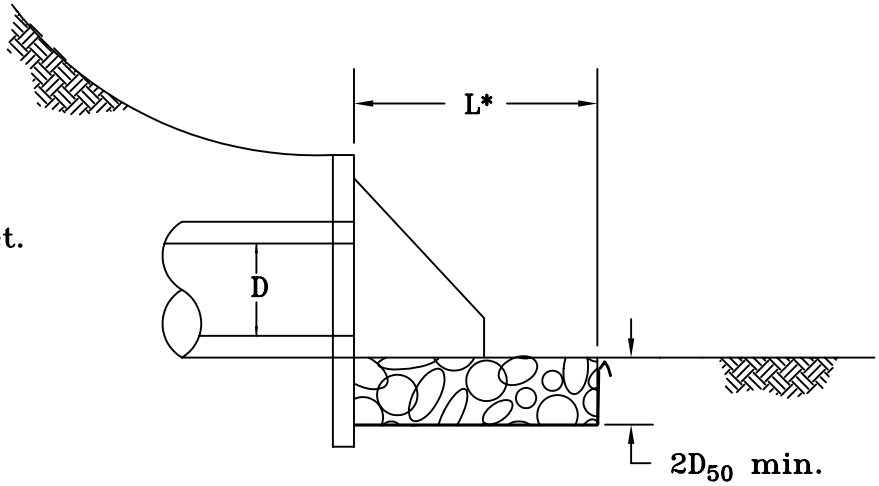

Sect. B–B

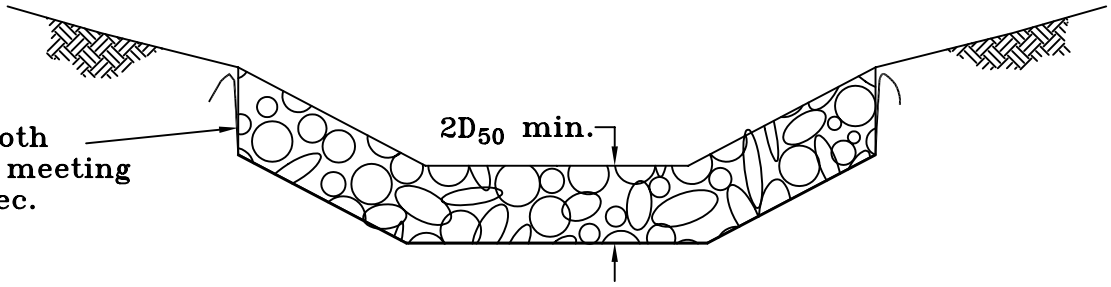

This is a modified VDOT Std. EC–1. The dimensions shown are the modifications to the Std. All other parameters remain as shown on the Std. VDOT EC–1 Dwg.

Ref. Sec. 6–1604.7A(3), 6–1604.7A(4) Plate 58–6 Rev. 1–00	RIPRAP PLACEMENT FOR OUTLET PROTECTION BELOW CULVERTS	PLATE NO.	STD. NO.
		59–6	

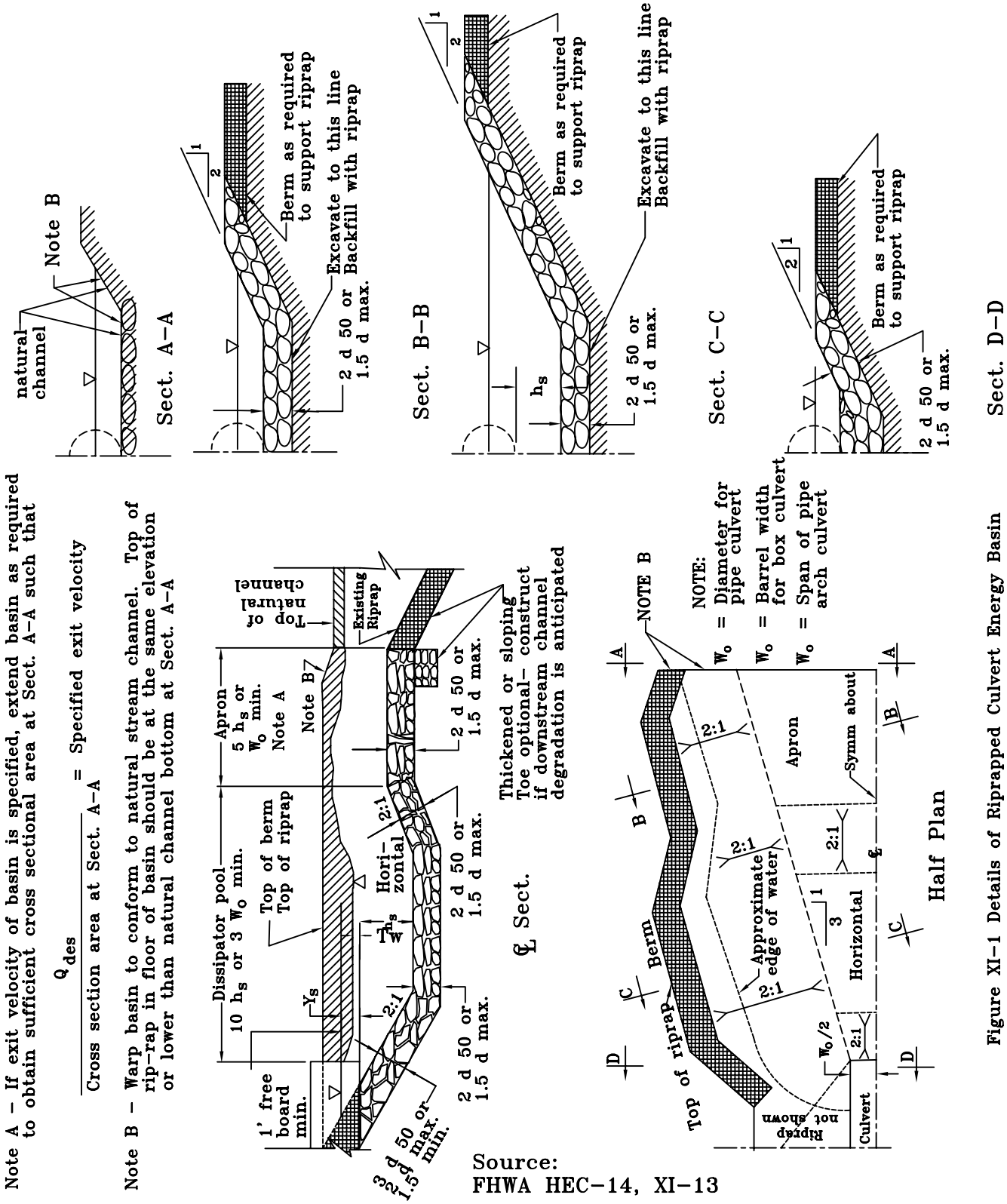

Source:
FHWA HEC–14, XI–13

Figure XI–1 Details of Riprapped Culvert Energy Basin

Ref. Sec. 6–1604.7A(4)	RIPRAP BASIN	PLATE NO.	STD. NO.
Rev. 1–00		60–6	

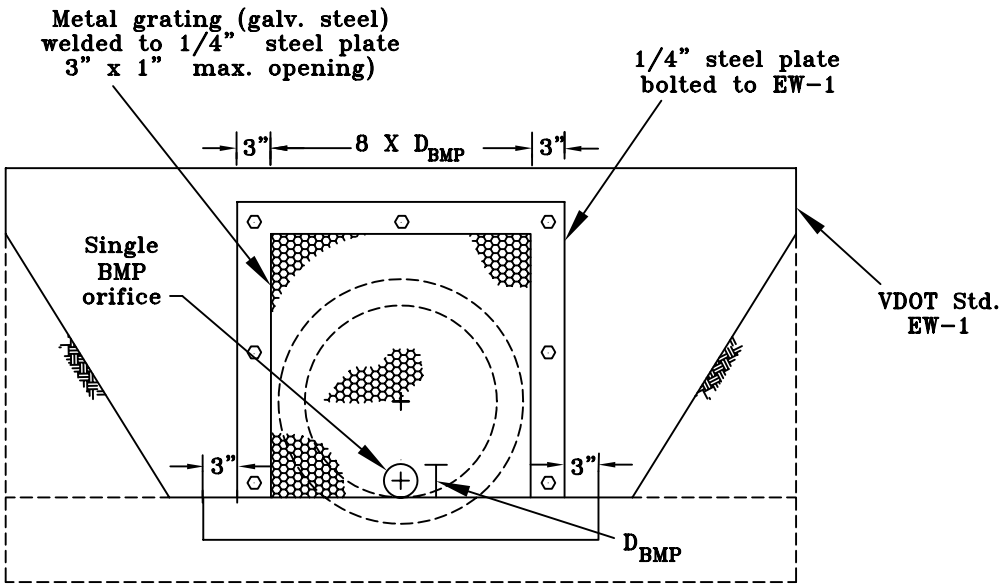

Elevation

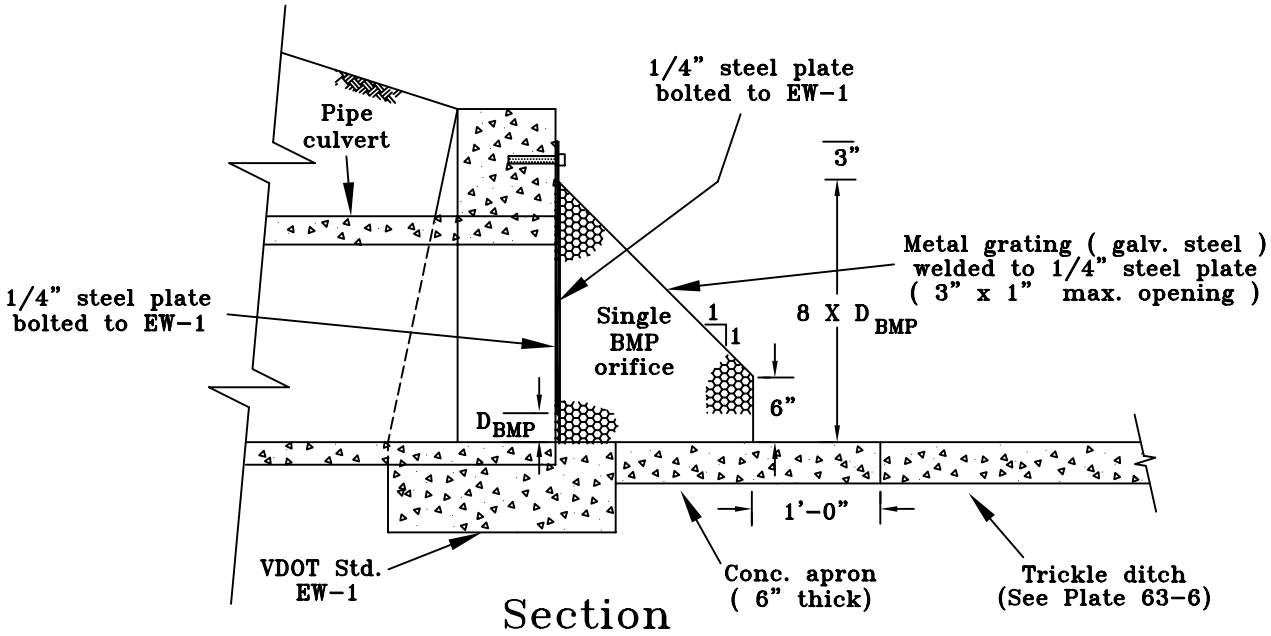

Section

Notes:

1) Alternative cage configurations are acceptable as long as the flow velocity thru the cage at the max BMP pool elev is less than 0.15 FPS
2) This detail (metal grating and steel plate) may be applied directly against rectangular risers.
3) For larger cages (height > 5') a 3' X 2' hinged gate with locking mechanism shall be installed on the front face of the cage.

Ref. Sec. 6-1604.8C Rev. 1-00	BMP EXTENDED DRAWDOWN DEVICE (EXAMPLE DETAIL)	PLATE NO.	STD. NO.
		61-6	

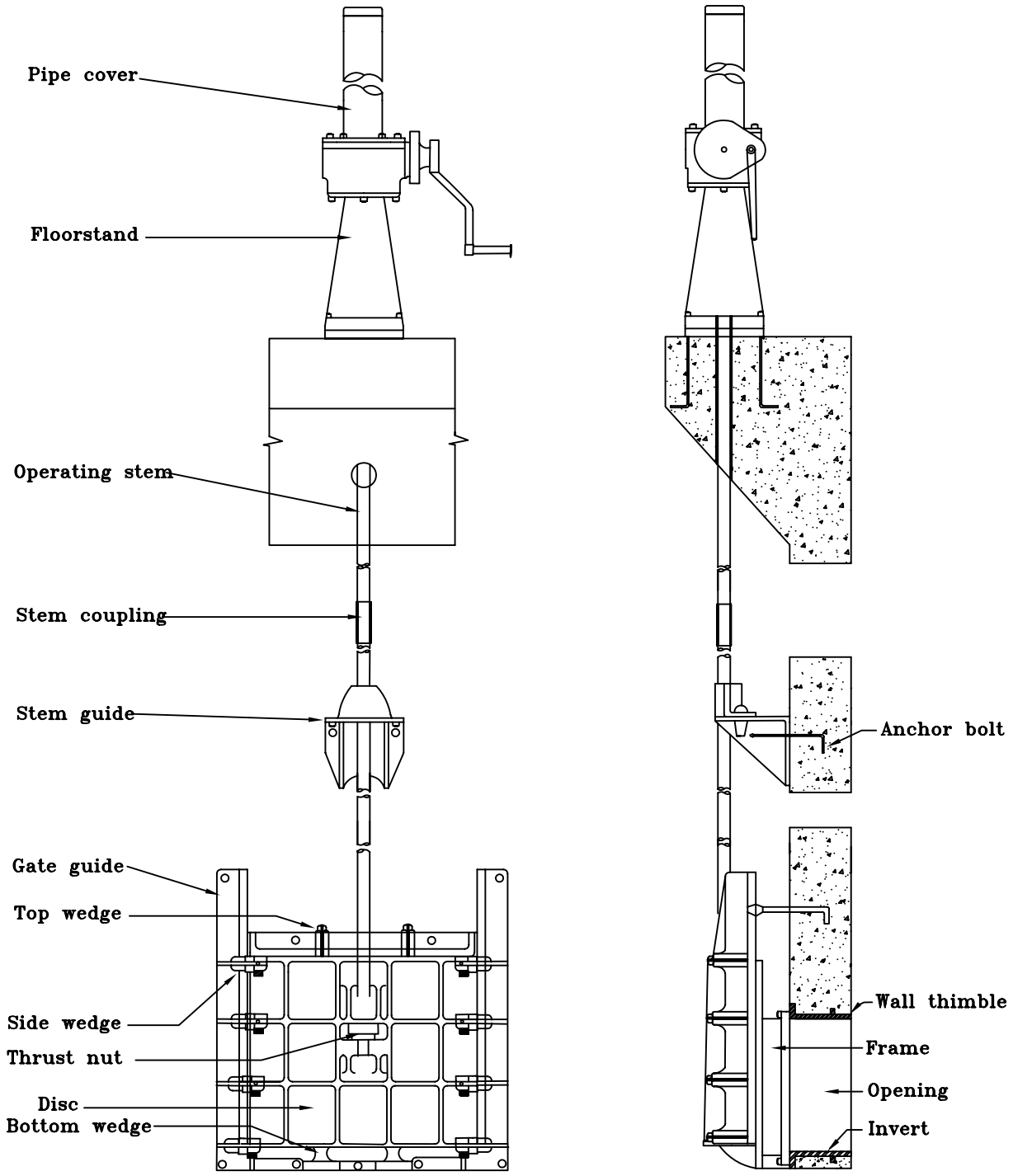

Source: Rodney Hunt Company

Ref. Sec. 6-1604.10C	EXAMPLE LOW LEVEL DRAIN FOR A WET POND SLUICE GATE NOMENCLATURE	PLATE NO.	STD. NO.
Rev. 1-00		62-6	

Typ. Sect.

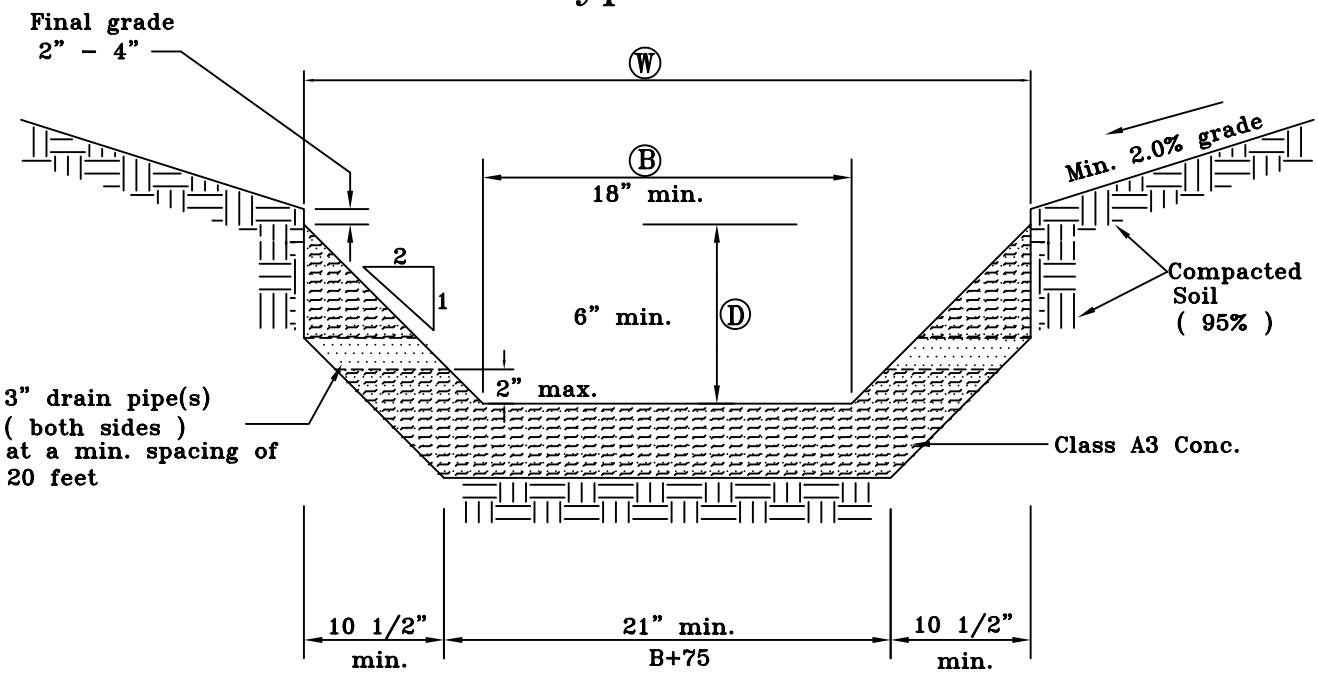

W = Design width of conc. ditch should be based on the Manning Formula to pass flows at least = to the full capacity of the low flow orifice.

B = Design base width of conc. ditch should be a min. of 18"

D = Design depth of conc. ditch should be a min. of 6".

B+3 = Bottom width of conc. ditch should be a min. size of 21"

Notes:

1. Appropriate transition section, with a min. length equal to 3 x W, shall be provided at the ends of the trickle ditch.
2. Curtain walls shall be provided at inlet areas where water flow is constant, & where the ditch transitions to the natural channel.
3. Porous stone sub-base should be avoided.
4. Min. ditch bottom grade is 0.5%.

Ref. Sec. 6-1604.11C, Plate 61-6	TRICKLE DITCH DETAIL	PLATE NO.	STD. NO.
Rev. 1-00		63-6	

Reservoir Classification	Geotech Engr Study	Foundation Design Treatment	Interior Drainage Features	Seepage Control Along Conduits	Embankment Design	Construction Observation & Testing
A	Required	See note [1]	Site specific[1] downstream drainage blanket surrounding principal spillway pipe is required	Site specific[1]	Stability & seepage analysis required	Licensed Prof. Engineer practicing geotechnical engineering
B	Required	See note [1]	Site specific[1] downstream drainage blanket surrounding principal spillway pipe is required	Site specific[1]	Stability & seepage analysis may be required	Licensed Prof. Engineer practicing geotechnical engineering
C	Required	See note [1]	Site specific[1] downstream drainage blanket surrounding principal spillway pipe may be required	Site specific[1]	Stability & seepage analysis may be required	Licensed Prof. Engineer practicing geotechnical engineering
D	May be required	See note [1]	See note [2]	See note [2]	Stability & seepage analysis not required	In conformance with permittees quality control program

Footnotes:

1 The guideline requirements shall be applied as required by site conditions.

2 Principal spillway pipe shall have concrete cradle as described in the guidelines extending from the riser for a length equal to two-thirds the total length of pipe under the footprint of the dam. The downstream one-third of the pipe shall be bedded in accordance with Section 6-1607.1B(2). The Director may allow an exception to this requirement based on site specific conditions or design.

3 Director may require a geotechnical engineering study for Class D reservoirs if problem soils or other circumstances dictate a need.

Reservoir Classification Chart

Height (ft)	Dry	Extended Dry	Wet
35	C	B	A
15	C	C	B
6	D	D	C

Reservoir Type

Ref. Sec. 6-1603.1B, 6-1605.1B, 6-1605.2A, 6-1605.4A(3), 6-1605.5A(1), 6-1605.5B(1), 6-1605.6C(2), 6-1605.6C(3), 6-1607.1, 6-1607.1B(2), 6-1607.2A

Rev. 1-00, 2011 Reprint

MINIMUM GEOTECHNICAL DESIGN STANDARDS FOR SMALL DAMS

PLATE NO.	STD. NO.
64-6	

Reservoirs Without Permanent Pool

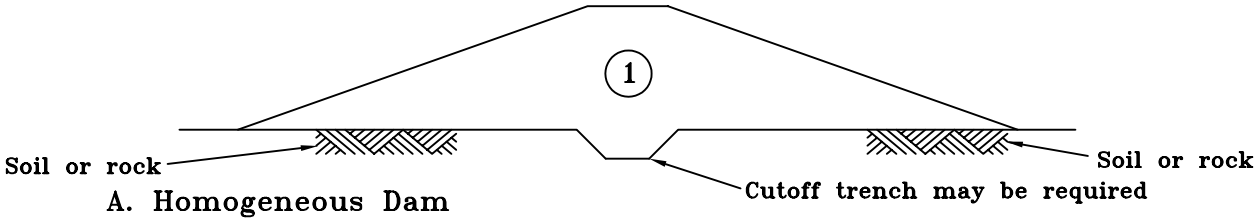

A. Homogeneous Dam

Reservoirs With Permanent Pool

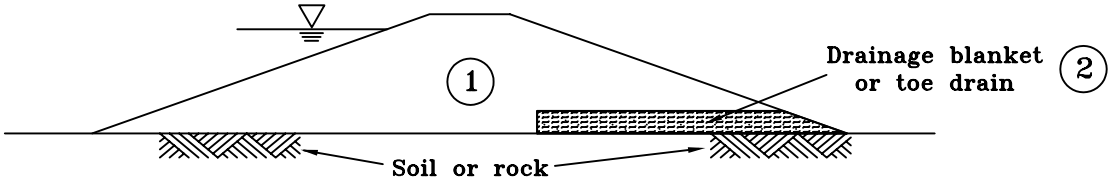

B. Modified Homogeneous Dam on Impervious Foundation

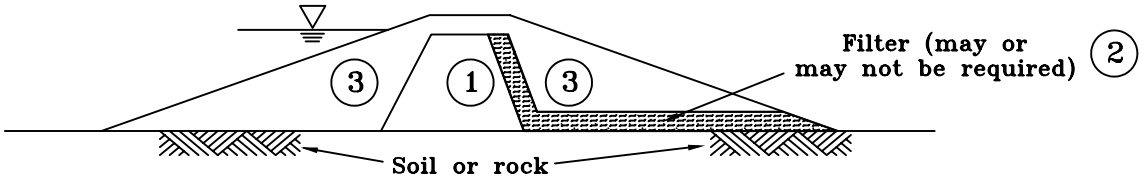

C. Zoned Dam on Impervious Foundation

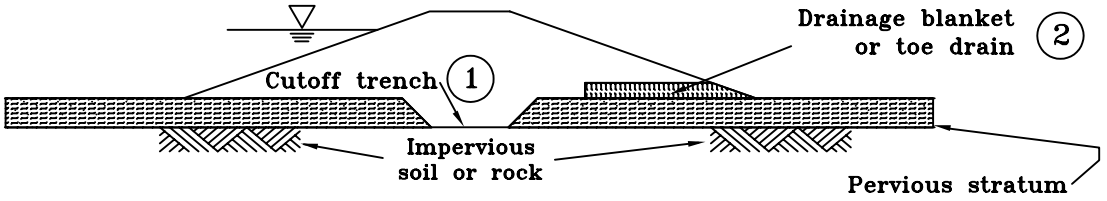

D. Modified Homogeneous Dam on Shallow Pervious Foundation

1. Zone 1: Impervious soil
2. Zone 2: Filter-drain material
3. Zone 3: Pervious soil or rock

Note: See discussion in Sect. 6-1605.5 for design of conduits thru dam embankments

Ref. Sec. 6-1605.1C, Plates 49-6, 50-6, 56-6, 57-6, 66-6	TYPICAL EMBANKMENT DAM SECTIONS (SEE CONTINUATION ON PLATE 66-6)	PLATE NO.	STD. NO.
Rev. 1-00, 2011 Reprint		65-6	

Reservoirs With Permanent Pool

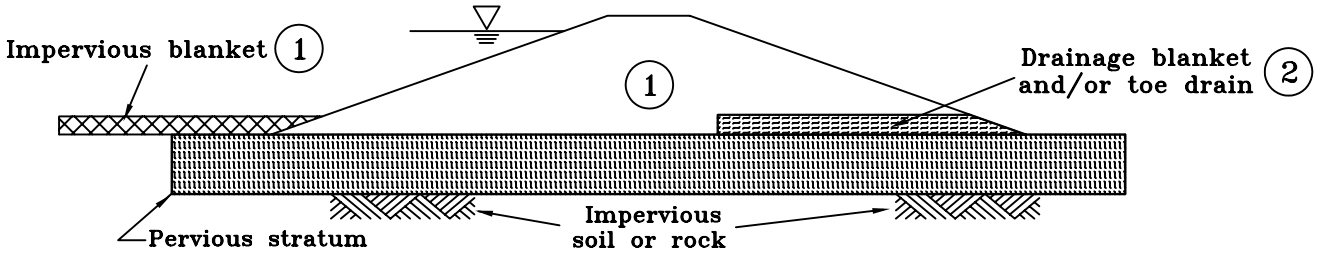

E. Modified Homogeneous Dam on Deep Pervious Foundation

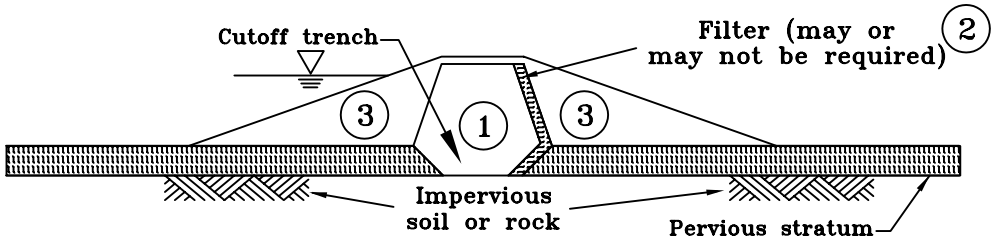

F. Zoned Dam on Shallow Pervious Foundation

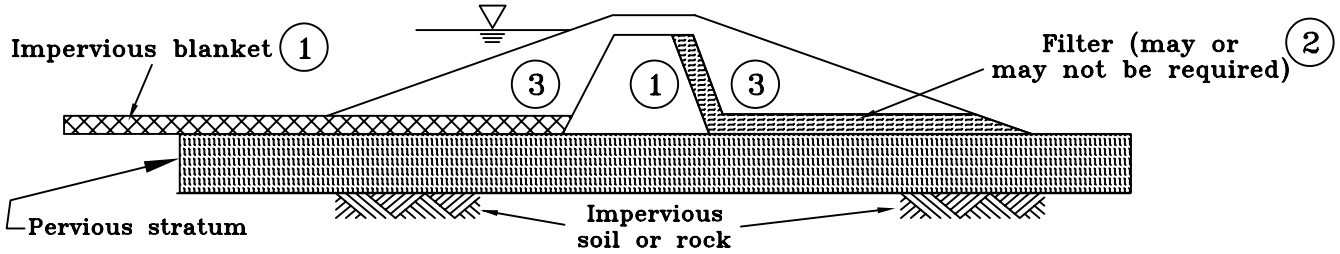

G. Zoned Dam on Deep Pervious Stratum

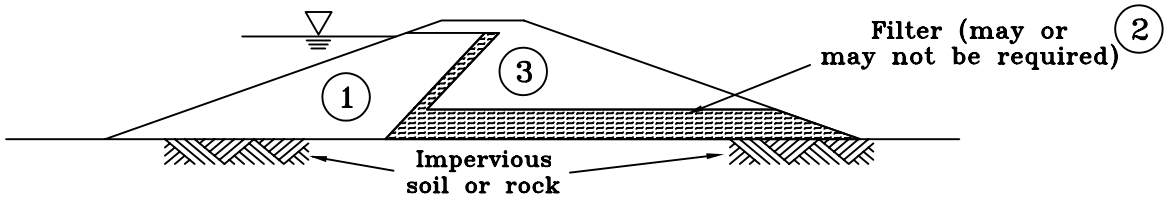

H. Alternative Zoned Dam

1. Zone 1: Impervious soil
2. Zone 2: Filter-drain material
3. Zone 3: Pervious soil or rock

Note: See discussion in Sect. 6-1605.5 for design of conduits thru dam embankments

Ref. Sec. 6-1605.1C, Plates 49-6, 50-6, 56-6, 57-6, 65-6 Rev. 1-00, 2011 Reprint	TYPICAL EMBANKMENT DAM SECTIONS (CONTINUED FROM PLATE 65-6)	PLATE NO.	STD. NO.
		66-6	

Concrete Cradle

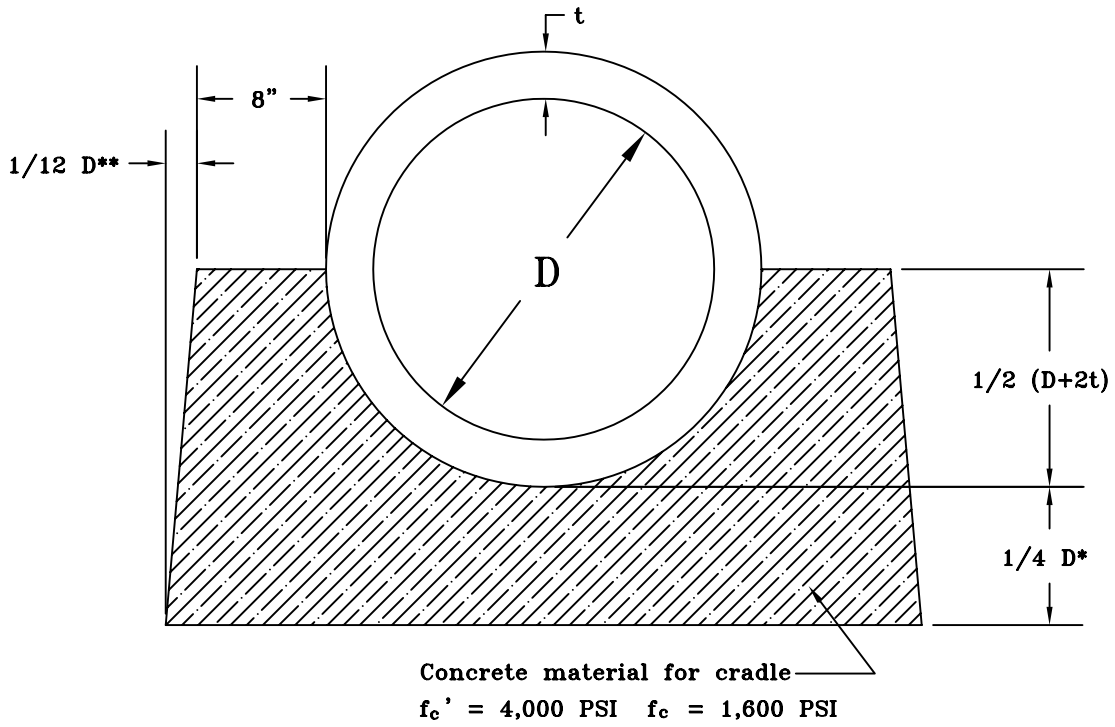

f_c' = Ultimate compressive strength of concrete

f_c = Design strength of concrete

* But not less than 6"

** If the pipe is laid in an excavated trench, then the side walls may conform to the trench shape (ie the trench may become the cradle form)

Source: NRCS; ES-154, A2 Cradle

Ref. Sec. 6-1605.5A(1) Rev. 1-00, 2011 Reprint	STANDARD CONCRETE CRADLE DETAILS FOR CIRCULAR CONDUITS EXTENDING THROUGH DAM EMBANKMENTS	PLATE NO. 67-6	STD. NO.

Legend

Max. Core

Min. Core B, for dams on deep pervious foundations without positive cutoff trench

Min. Core A, for dams on impervious foundations or shallow pervious foundations with positive cutoff trench

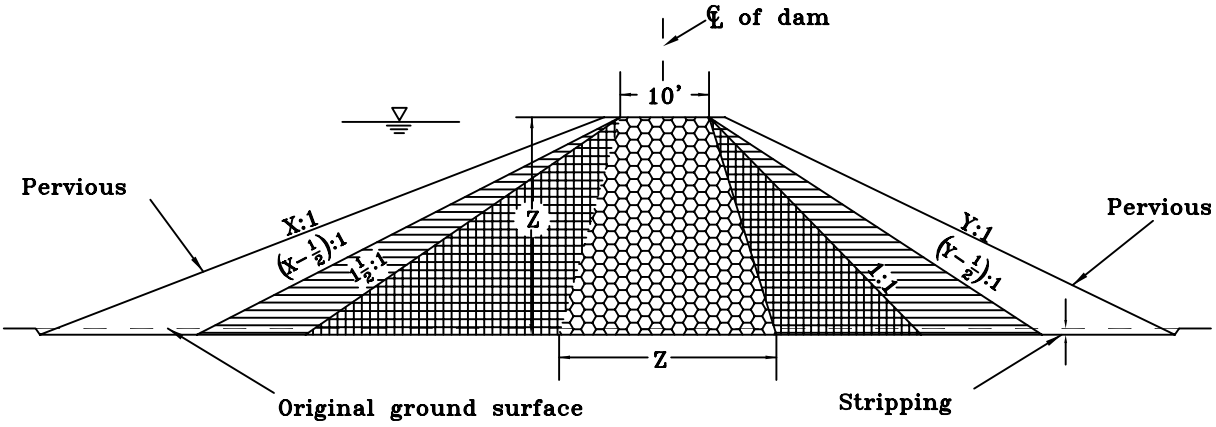

Size range of impervious cores used in zoned embankments, 288-D-2497.

Note: X and Y are the horizontal components of the upstream and downstream embankment slopes, respectively.

Reference: "Design of Small Dams", Bureau of Reclamation, 3rd Edition, 1987.

Ref. Sec. 6-1605.6B(1) Rev. 1-00	SUGGESTED MINIMUM & MAXIMUM CORE SIZES FOR SMALL DAMS WITH ZONED EMBANKMENTS	PLATE NO. 68-6	STD. NO.

Recommended Slopes for Small Homogeneous Earthfill Dams on Stable Foundations

Case	Type	Purpose	Subject to Rapid Drawdown[1]	Soil Classification[2]	Upstream Slope	Downstream Slope
A	Homogeneous or modified homogeneous	Detention or Storage	No	GW,GP,SW,SP	Pervious	unsuitable
				GC,GM,SC,SM	2.5:1	2:1
				CL,ML	3:1	2.5:1
				CH,MH	3.5:1	2.5:1
B	Modified homogeneous	Storage	Yes	GW,GP,SW,SP	Pervious	unsuitable
				GC,GM,SC,SM	3:1	2:1
				CL,ML	3.5:1	2.5:1
				CH,MH	4:1	2.5:1

[1] Drawdown rates of 6" or more per day after prolonged storage at high reservoir levels. OL and OH soils are not recommended for major portions of homogeneous earthfill dams. Pt soils are unsuitable.

Recommended Slopes for Small Zoned Earthfill Dams on Stable Foundations

Type	Purpose	Subject to Rapid Drawdown[2]	Shell Material Classification	Core Material Classification[3]	Upstream Slope	Downstream Slope
Zoned with Min. Core A[1]	Any	Not Critical[4]	Rockfill,GW,GP, SW (Gravelly), or SP (Gravelly)	GC,GM,SC,SM CL,ML CH,MH	2:1	2:1
Zoned with Max. Core[1]	Detention or Storage	No	Rockfill,GW,GP, SW, (Gravelly), or SP (Gravelly)	GC,GM	2:1	2:1
				SC,SM	2.25:1	2.25:1
				CL,ML	2.5:1	2.5:1
				CH,MH	3:1	3:1
Zoned with Max. Core[1]	Storage	Yes	Rockfill,GW,GP, SW, (Gravelly), or SP (Gravelly)	GC,GM	2.5:1	2:1
				SC,SM	2.5:1	2.25:1
				CL,ML	3:1	2.5:1
				CH,MH	3.5:1	3:1

[1] Min. & max. size cores are shown on Figure 6-43.
[2] Rapid drawdown is 6" or more per day after prolonged storage at high reservoir.
[3] OL and OH soils are not recommended for major portions of the cores of earthfill dams. levels. Pt soils are unsuitable.
[4] Rapid drawdown will not effect the upstream slope of a zoned embankment that has a large upstream pervious shell.

Note: Slopes steeper than 2.5:1 shall not be permitted without Director approval.

Reference: "Design of Small Dams", Bureau of Reclamations, 3rd Edition, 1987.

Ref. Sec. 6-1605.6C(1)	RECOMMENDED SIDE SLOPES FOR SMALL DAMS ON STABLE FOUNDATIONS	PLATE NO.	STD. NO.
Rev. 1-00		69-6	

Typical Access Road Section

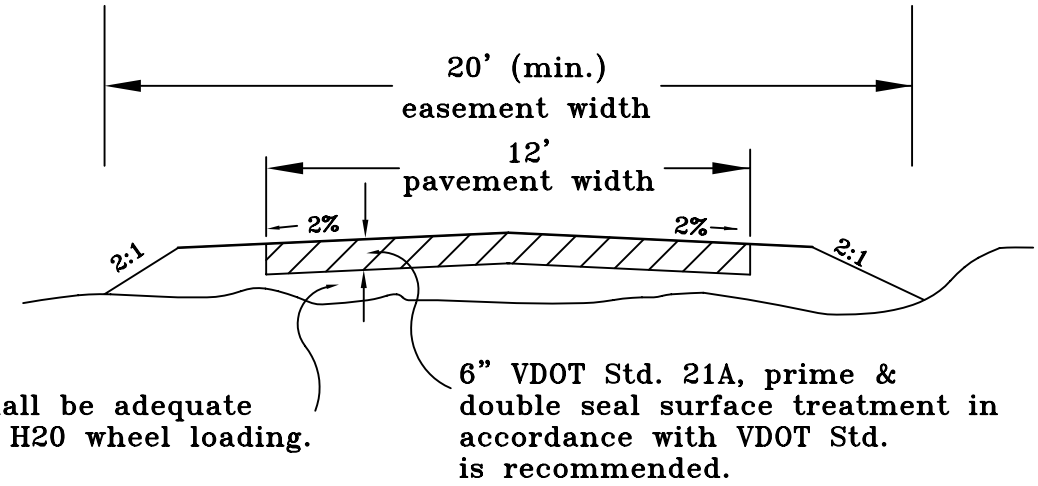

Note: Where maintenance access is located between or near residential lots, approved geoblock pavement alternative should be considered.

Ref. Sec. 6-1606.2G Rev. 1-00, 11-05	STANDARD MAINTENANCE ACCESS ROAD DETAILS FOR STORMWATER MANAGEMENT PONDS	PLATE NO. 70-6	STD. NO.

Note: W6 X 12, A36 all exposed surfaces, lock assembly, gate hinges, & stopper, shall not be painted as per VDOT Spec. Sect. 239.04.

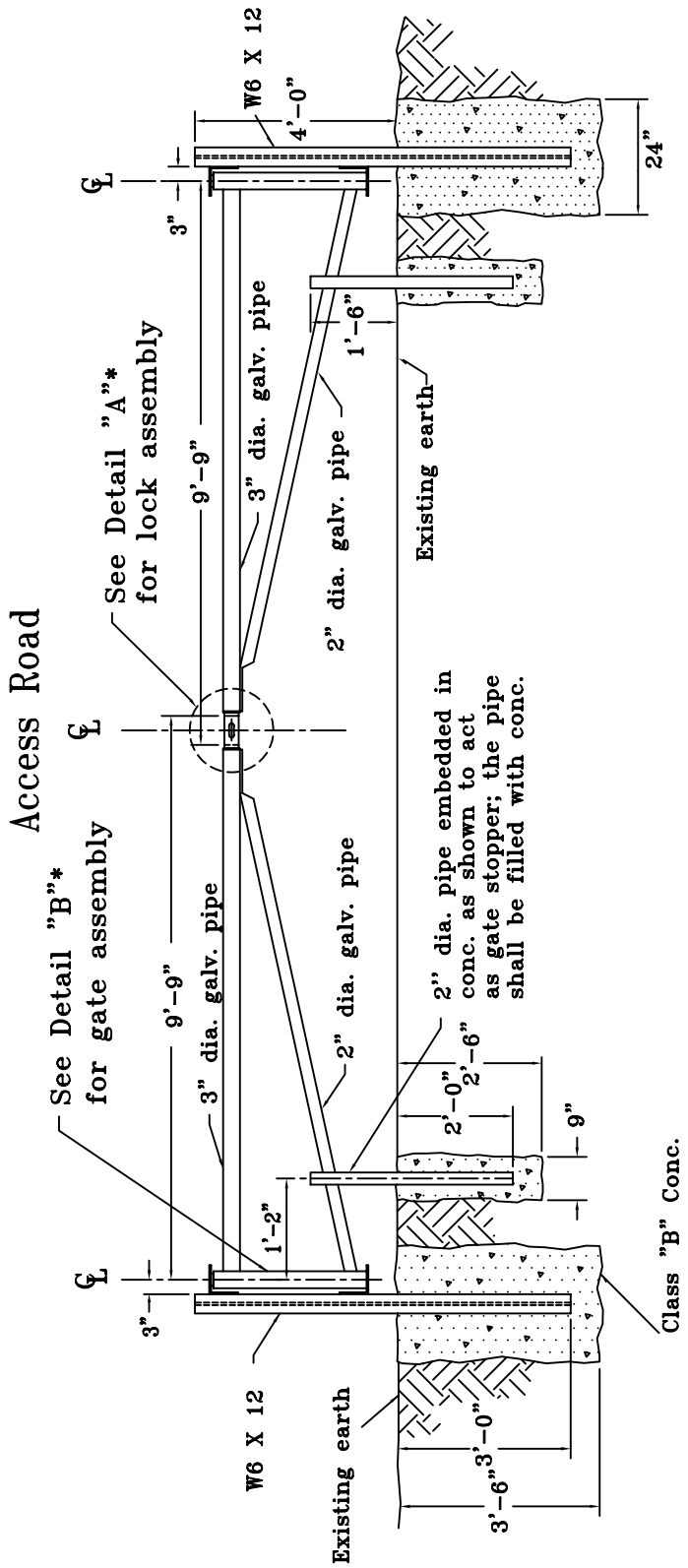

View of Gate at Entrance

* See Plate 71-A

Ref. Sec. 6-1606.2G, Plate 71A-6	STANDARD ACCESS ROAD GATE DESIGN	PLATE NO.	STD. NO.
Rev. 1-00		71-6	

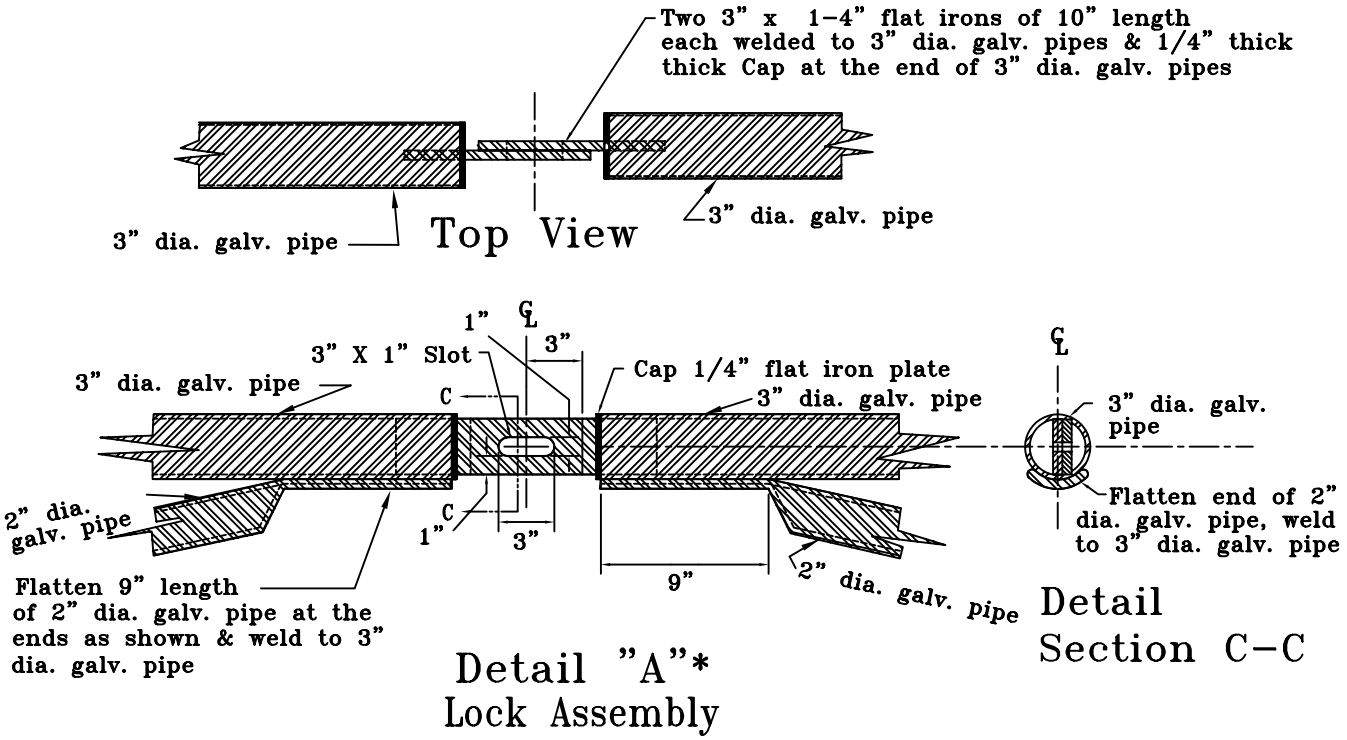

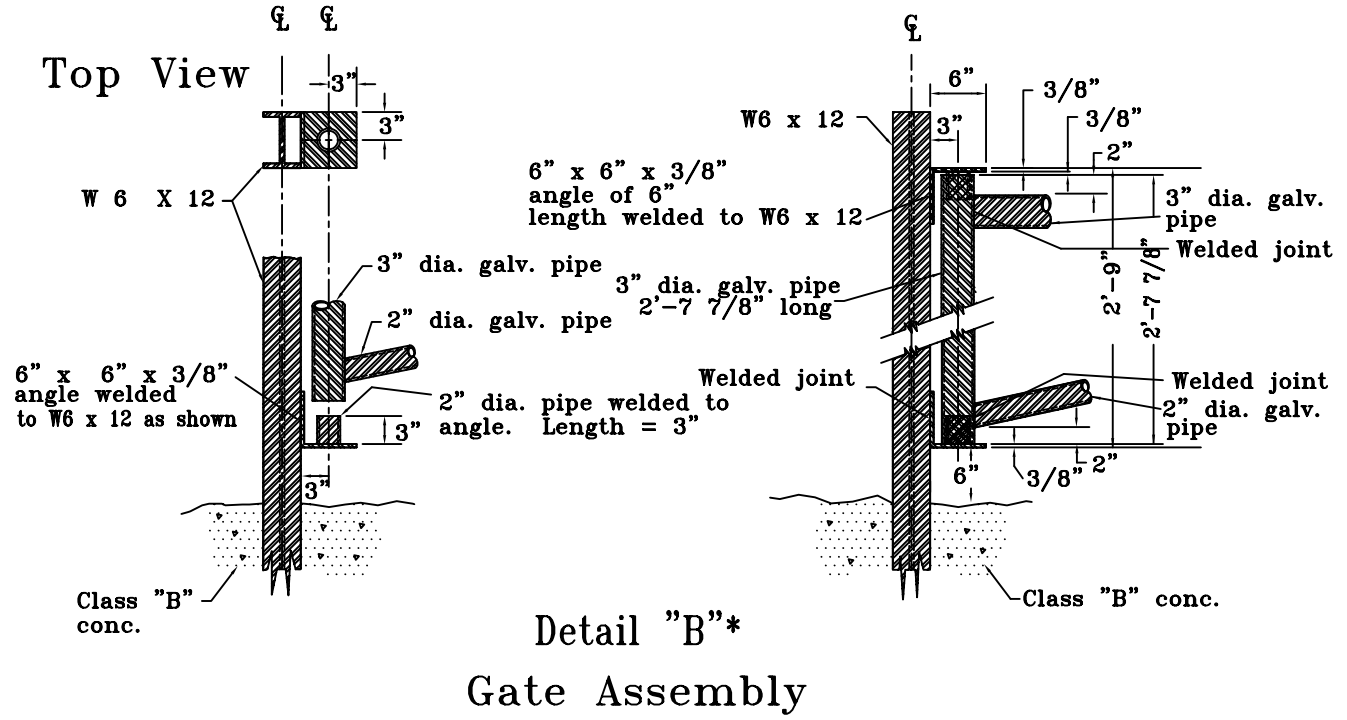

Ref. Sec. 6-1606.2G, Plate 71-6	STANDARD ACCESS ROAD GATE DESIGN	PLATE NO.	STD. NO.
Rev. 1-00	* See Plate 71-6	71A-6	

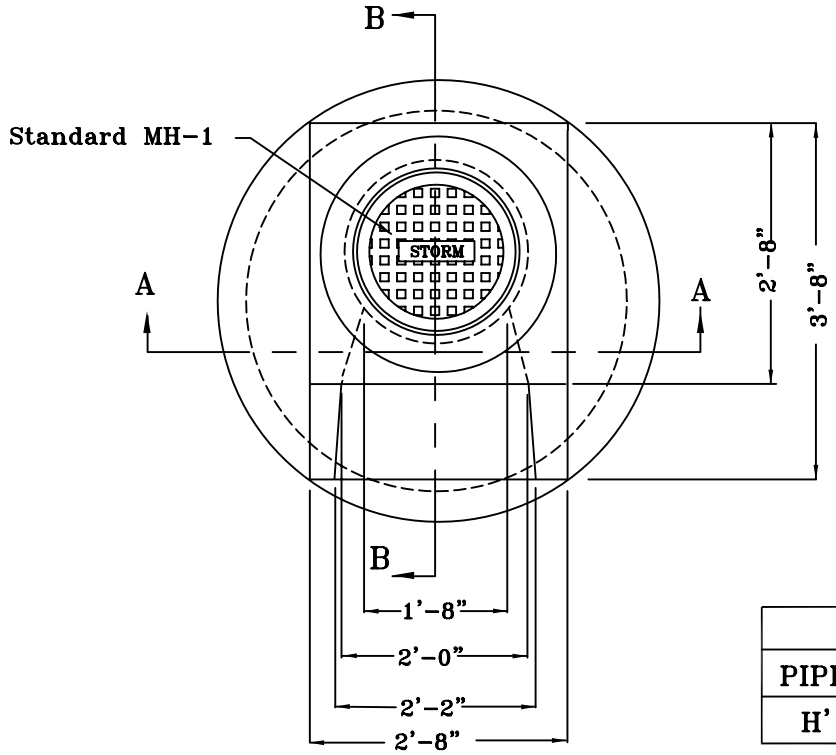

PLAN VIEW

MINIMUM HEIGHTS				
PIPE	12"	15"	18"	24"
H'	3.08	3.35	3.62	4.16

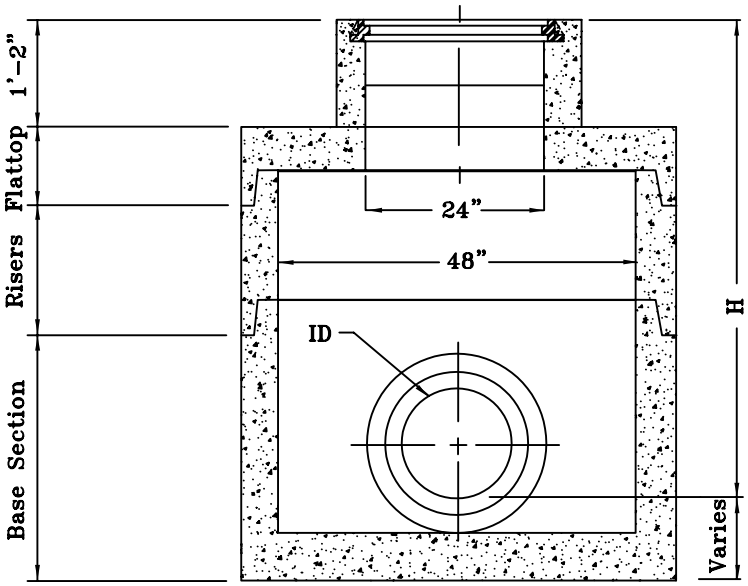

SECTION A-A

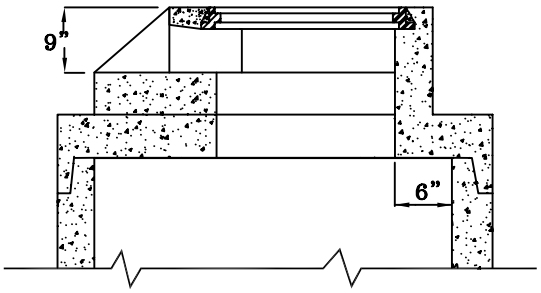

SECTION B-B

NOTE:
Manhole to meet current requirements of ASTM specification C-478

Rev. Sec. 6-1104.4 Rev. 1-00, 11-05, 2011 Reprint	MODIFIED YARD INLET (SINGLE THROAT)	PLATE NO.	STD. NO.
		72-6	YI-2

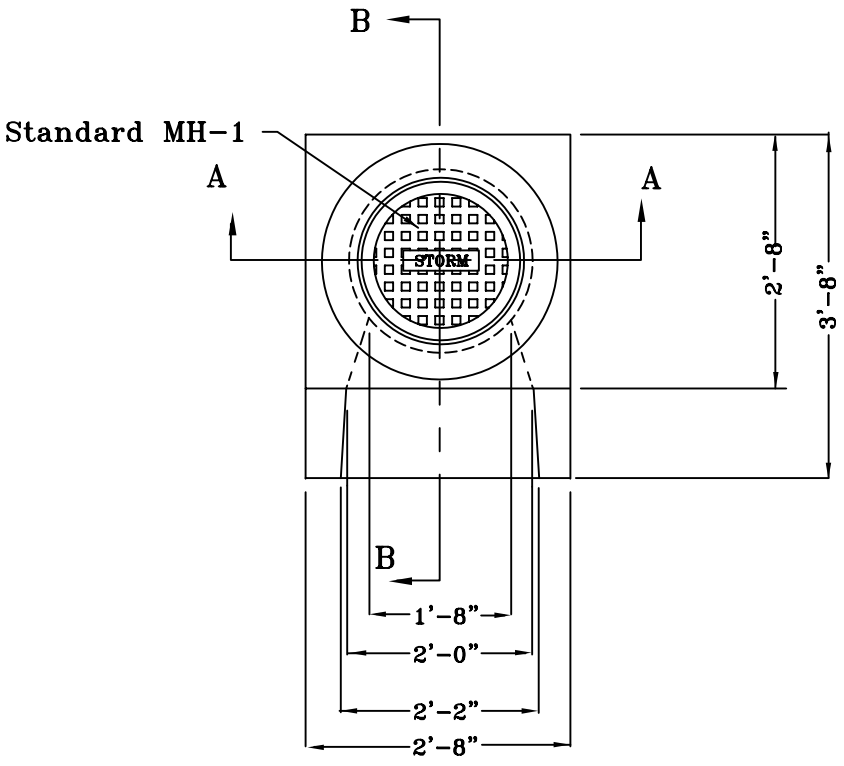

PLAN VIEW

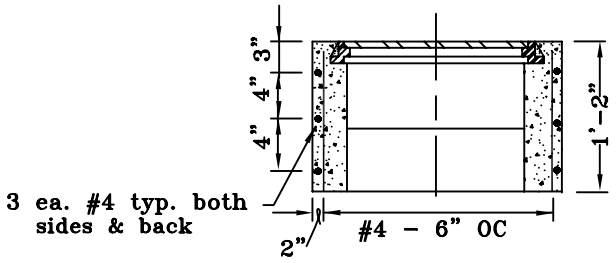

SECTION A-A

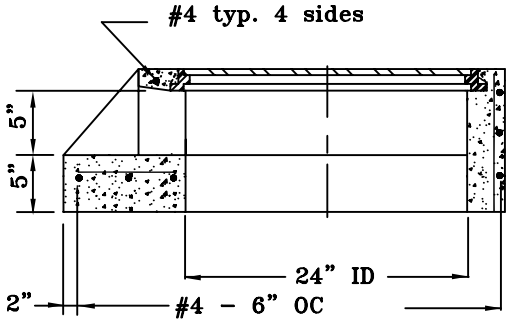

SECTION B-B

Ref. Sec. 6-1104.4 Rev. 1-00, 11-05, 2011 Reprint	TOP DETAIL MODIFIED YARD INLET (SINGLE THROAT)	PLATE NO. 73-6	STD. NO. YI-2

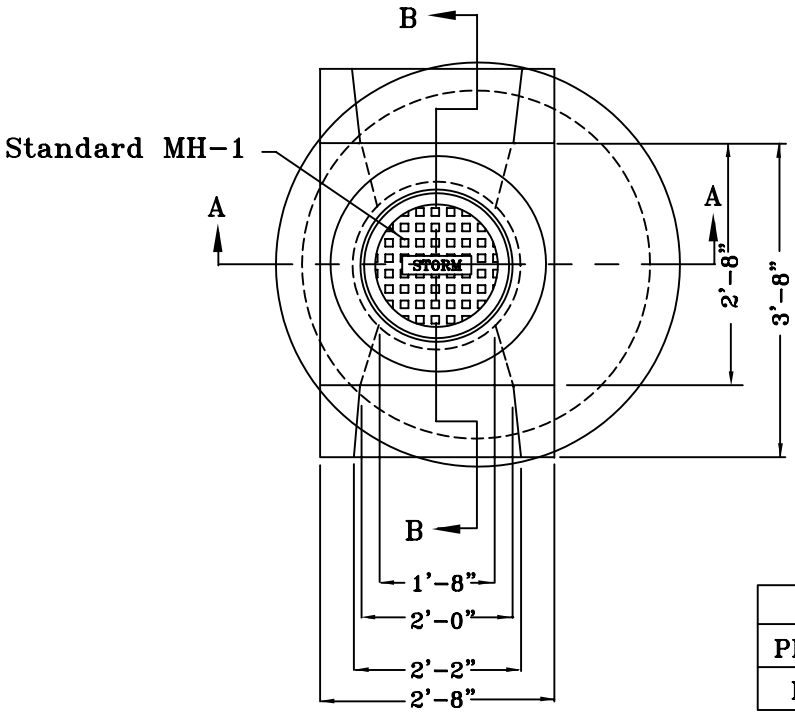

PLAN VIEW

MINIMUM HEIGHTS				
PIPE	12"	15"	18"	24"
H'	3.08	3.35	3.62	4.16

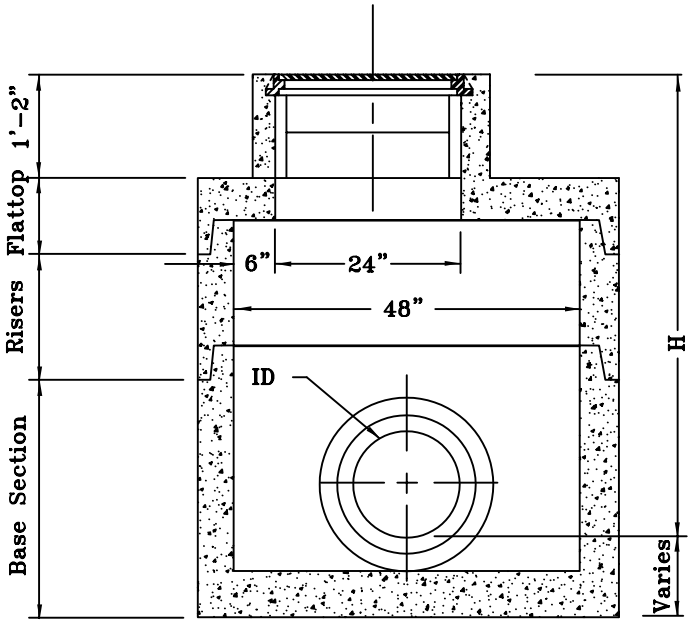

SECTION A-A

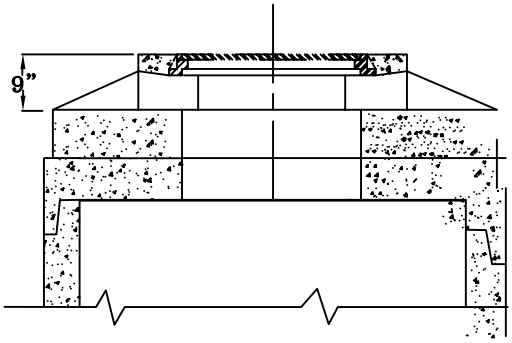

SECTION B-B

NOTE: Manhole to meet current requirements of ASTM specifications C-478

Ref. Sec. 6-1104.4 Rev. 1-00, 11-05, 2011 Reprint	MODIFIED YARD INLET (DOUBLE THROAT)	PLATE NO.	STD. NO.
		74-6	YI-3

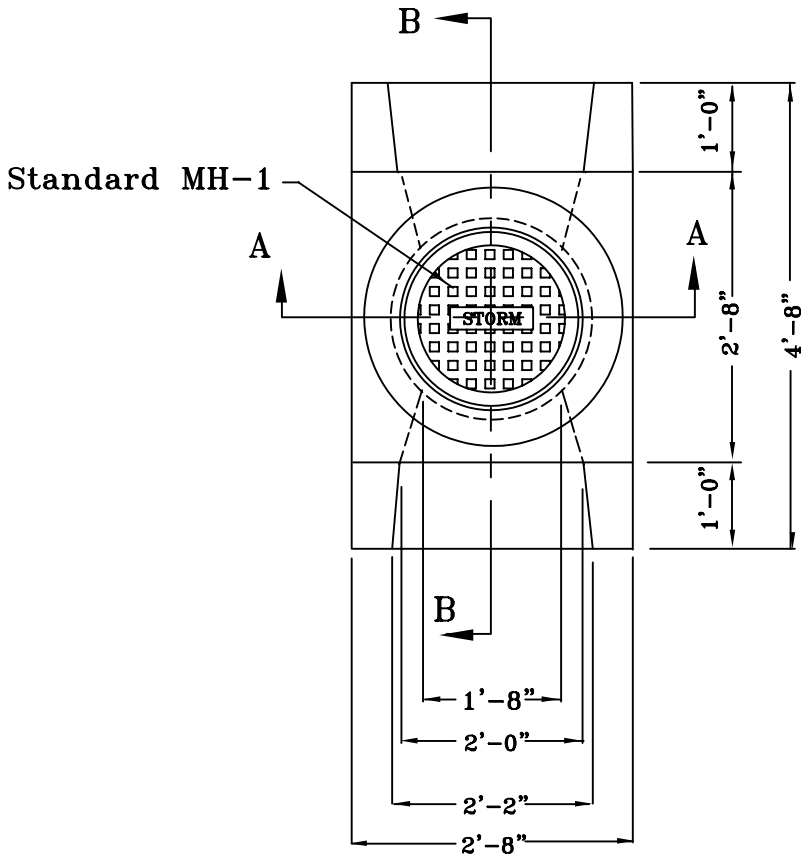

PLAN VIEW

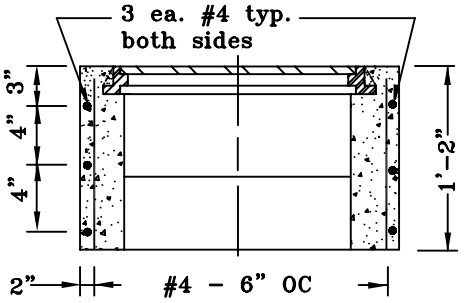

SECTION A-A

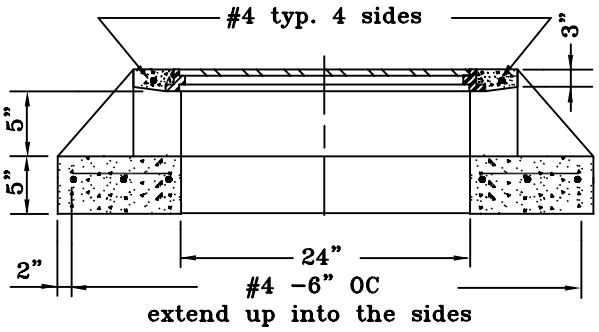

SECTION B-B

Ref. Sec. 6-1104.4 Rev. 1-00, 11-05, 2011 Reprint	TOP DETAIL MODIFIED YARD INLET (DOUBLE THROAT)	PLATE NO. 75-6	STD. NO. YI-3

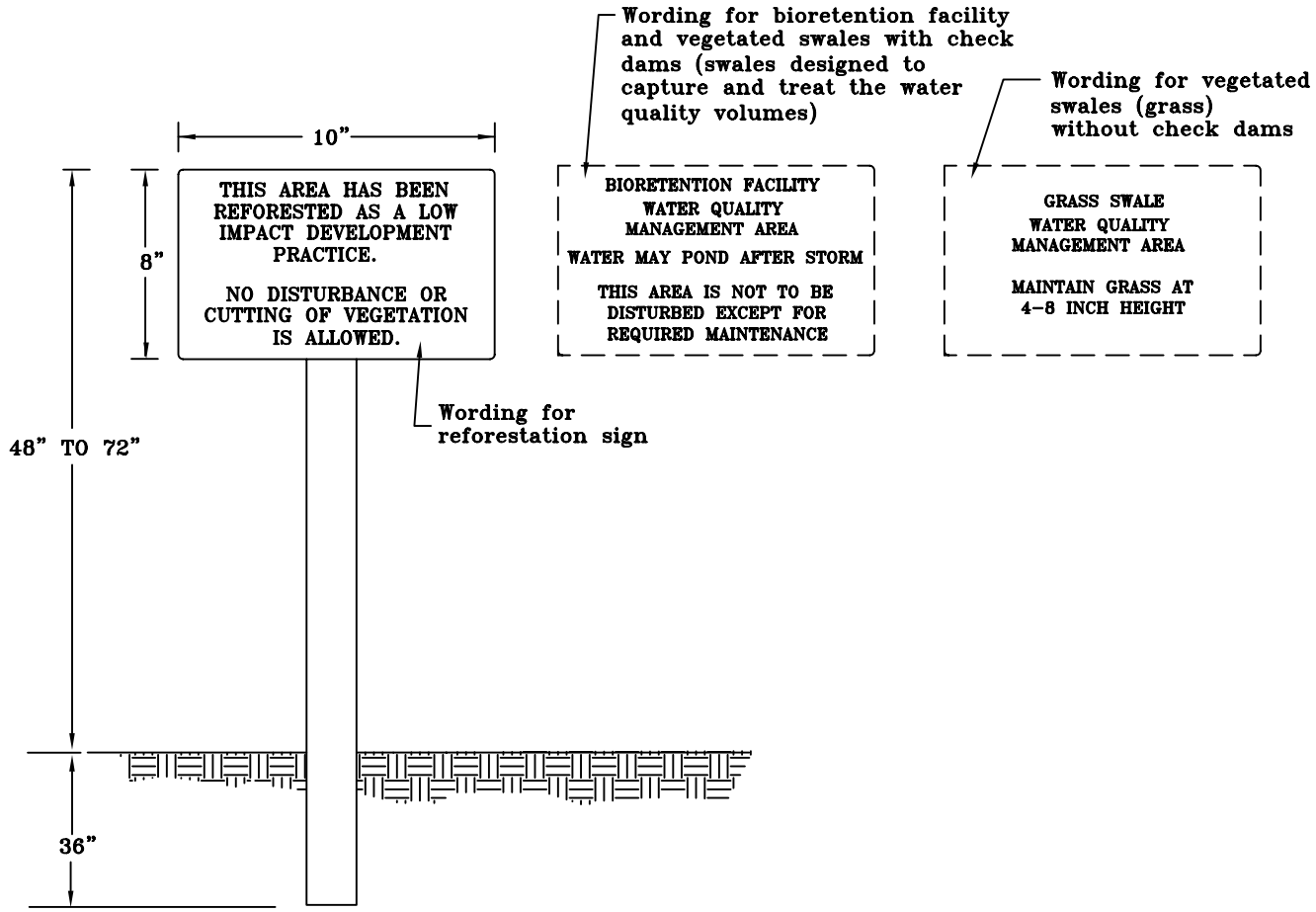

GENERAL REQUIREMENTS

1) The sign is to be placed on a 3" "U" channel post 8' long.
2) The sign is to be placed at approximately 150 foot intervals along the perimeter of the reforested area or the bioretention facility. The sign is to be placed at approximately 150 foot intervals along the length of vegetated swales on alternating sides. Each reforested area, bioretention facility, and vegetated swale shall have a minimum of one sign.
3) The sign shall be made with reflective materials and be green with white border and standard 1/2" lettering.
4) Alternate design may be approved by the Director.
5) Sign is not to be placed in existing or proposed VDOT right-of-way.
6) Signs for bioretention facilities on individual single family lots may be placed on wood or metal posts at heights as low as 30" above ground and be made of non-reflective materials in colors other than green and white.

Ref. Sects. 6-1307.3C, 6-1308.3C and 6-1311.2D Rev. 3-07, 2011 Reprint	REFORESTED AREA, BIORETENTION, OR VEGETATED SWALE SIGN	PLATE NO.	STD. NO.
		81-6	

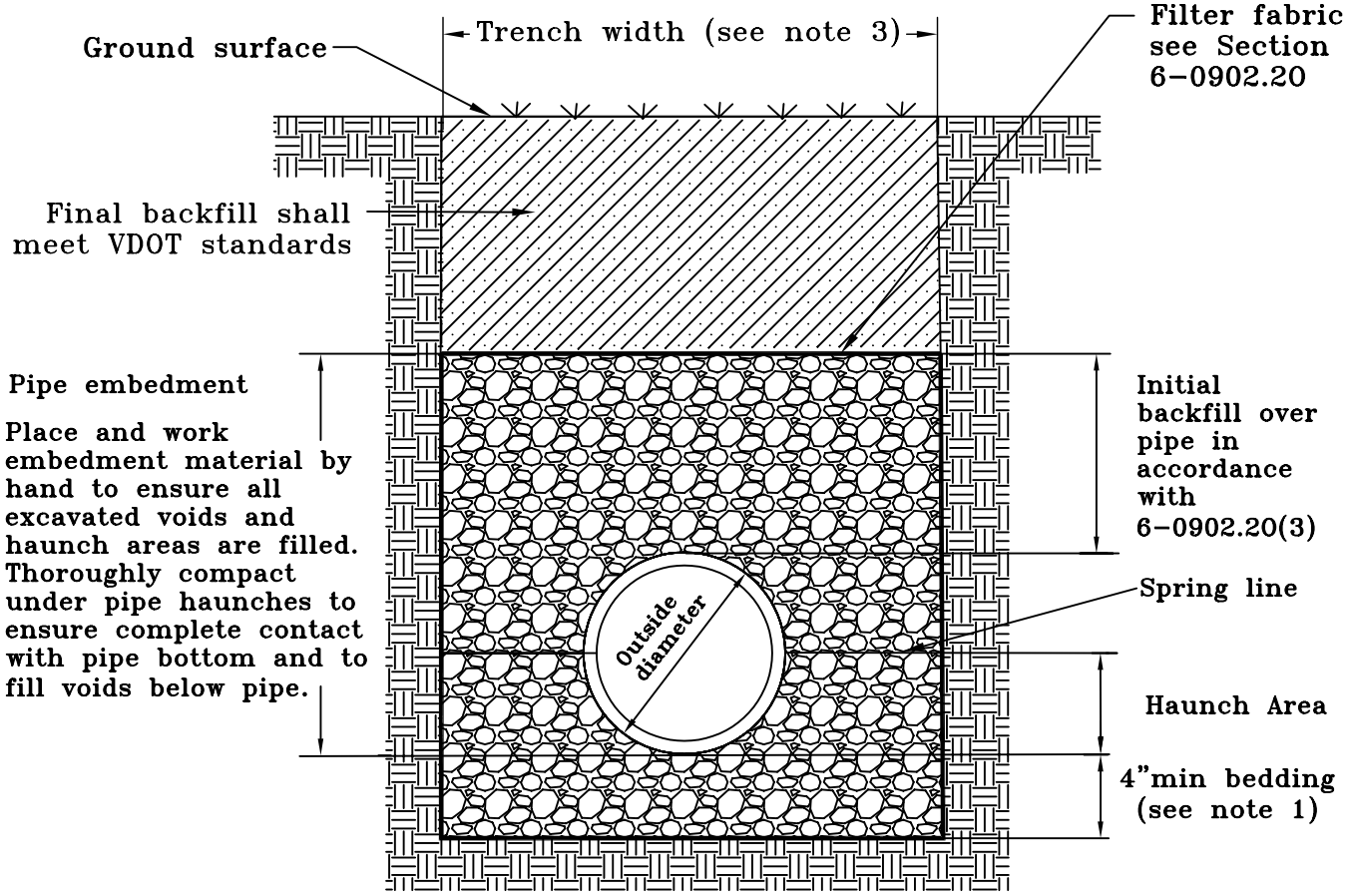

NOTES

1. Bedding shall be in accordance with VDOT standards unless specified on the plan.

2. Backfill material shall be placed alongside the pipe in uniform layers in lifts not to exceed 6" in depth. Backfill material shall be VDOT aggregate No. 25 or 26, aggregate base material size 21A or 21B, or flowable fill. Compaction shall meet VDOT standards and be in accordance with PFM Section 4-0503 for minimum required site density testing.

3. Trench width shall be specified by the Engineer and meet VDOT standards. Refer to ASTM D2321 for procedures for trench excavations that are especially important in flexible thermoplastic pipe installations such as support of trench walls and trench boxes. Moveable trench boxes shall not be used below the pipe embedment per ASTM D2321.

Ref. Sec. 6-0902.20(3)	HDPE PIPE TRENCH	PLATE NO.	STD. NO.
Rev. 1-03, 2011 Reprint		93-6	