Fairfax County, Virginia

"Classic" Wall Bracing

Based on the 2012 Virginia Residential Code

The information herein provides guidelines for complying with the most common classic" wall bracing provisions of the Virginia Residential Code, Section R602.10, and are not representative of all the conditions that may be required.

A simpler approach to complying with wall bracing requirements is also available; see our companion publication entitled Practical Wall Bracing based on Section R602.12.

Contents

Resisting Wind Load.....3
Braced Wall Panels.....3
Braced Wall Lines.....4
Bracing Rules.....5
Bracing Methods.....7
Requirements for Braced Wall Panels.....7
Braced Wall Panel Connections.....10
Engineered Design.....12
Submission Requirements.....12

Fairfax County is committed to a policy of nondiscrimination in all county programs, services and activities. To request this information in an alternative format call **703-222-0801, TTY 711** or write the Customer and Technical Support Center at 12055 Government Center Parkway, Suite 216, Fairfax, VA 22035-5504. Please allow seven working days for preparation of material.

RESISTING WIND LOAD

All buildings must be designed to resist wind load. Unlike snow load which acts vertically and downward only, wind load acts horizontally and in any direction.

The design wind load on a structure is based on the local wind speed which is 90 mph for Fairfax County. Due to the way wind is measured, this translates to a weak Category 1 hurricane.

The structural system of a house is designed to transfer wind load from where it is applied all the way to the ground; this is called "load path." Wind load is resisted by the walls parallel to the direction of the wind. For example, in a simple one-story house, as shown in FIGURE 1, wind against the end wall would cause the roof to move in the direction of the wind, but the movement is resisted by the bracing in the side walls parallel to the wind.

This process is similar for houses with multiple floors. However, in such cases, the walls of the first floor have the added responsibility of resisting the forward movement of all the floors and the roof above.

The Virginia Residential Code accounts for the properties and characteristics of wind through the construction requirements in this publication.

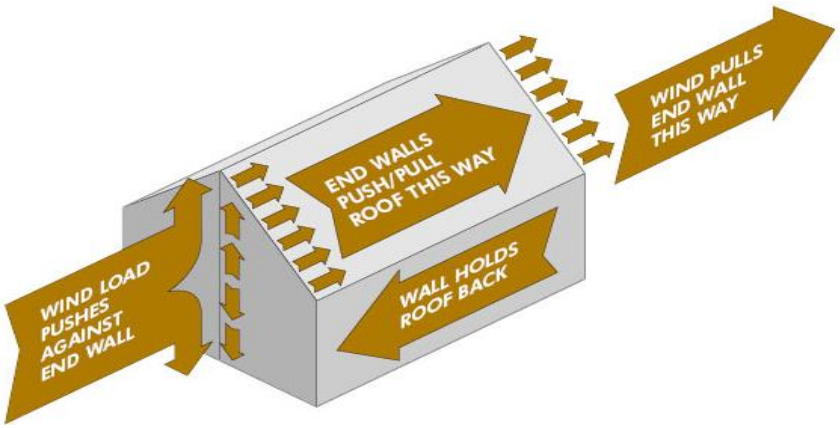

FIGURE 1: WIND LOAD APPLIED TO HOUSE

BRACED WALL PANELS

As shown in FIGURE 2, a typical wall will rack due to wind load if no bracing is provided. When installed in specified locations along a wall, usually in the form of oriented strand board (OSB), bracing prevents this lateral displacement. See FIGURE 3.

The code defines a "braced wall panel" as a sheathed, full-height (12-foot maximum) section of wall constructed to resist wind load and placed on a wall in specified lengths and locations.

Sheathing types, also called bracing method, are available in various materials and configurations; see Page 7. A braced wall panel is not required to be constructed with a single sheet of sheathing. Joints are permitted provided vertical joints occur at a stud and horizontal joints are blocked.

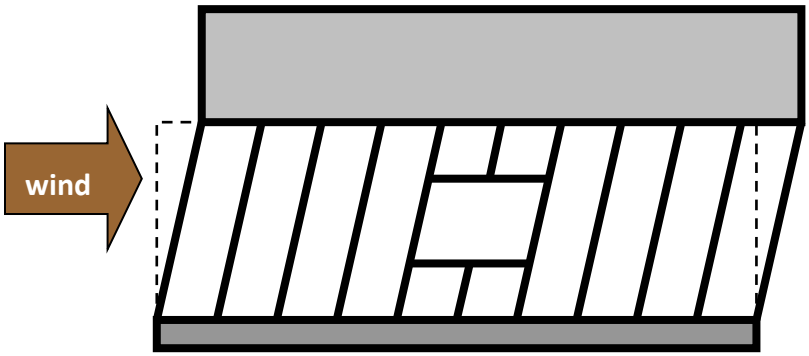

FIGURE 2: RACKING DUE TO WIND LOAD

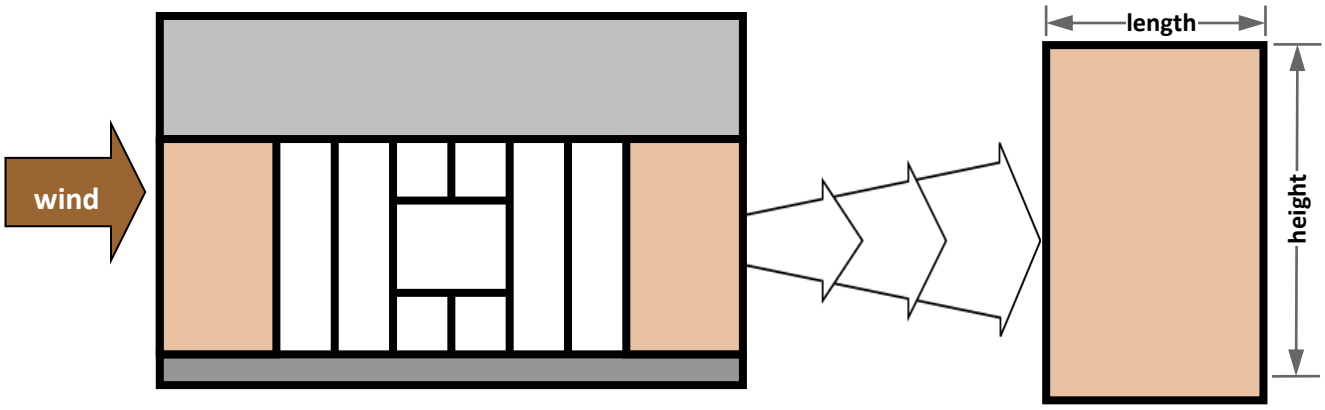

FIGURE 3: BRACED WALL PANELS

BRACED WALL LINES

"Braced wall lines," help to ensure proper distribution of bracing throughout your house or addition. Braced wall lines are imaginary straight lines which represent the centerline of lateral resistance provided by parallel braced wall panels located on or within 4 feet of the braced wall line location. The amount and location of bracing are derived from the characteristics of each braced wall line.

You will want to place your braced wall lines strategically using the rules noted herein to ensure the amount of bracing is both economical and safe. Braced wall lines are required to be located along all the exterior walls of your house or addition such that they intersect with braced wall lines running in the opposite direction at each end. Braced wall lines are permitted to "float" between actual walls on either side, see BWL-A in FIGURE 4, provided the distance between the actual sheathed walls on either side and the braced wall line are less than or equal to 4 feet.

Braced wall lines may also need to run through the interior of your house. For instance, in FIGURE 4, BWL-B, located interior to the house, would be required if the amount of required bracing cannot fit on the actual walls of BWL-A and BWL-C or if the distance between them was greater than 60 feet.

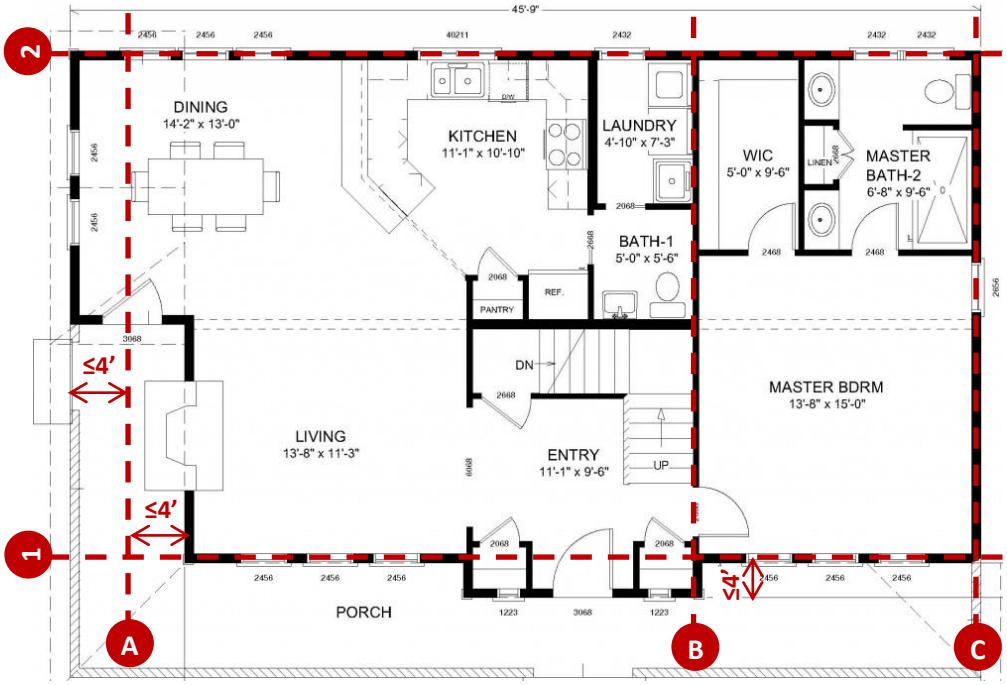

FIGURE 4: PLACEMENT OF BRACED WALL LINES

BRACING RULES

The placement and amount of braced wall panels for each braced wall line are required to meet all four of the following rules.

1. **Location:** Braced wall panels must begin at or within 10 feet of each end of a braced wall line. See FIGURE 5.
2. **Spacing:** The distance between adjacent braced wall panels cannot exceed 20 feet. See FIGURE 5.

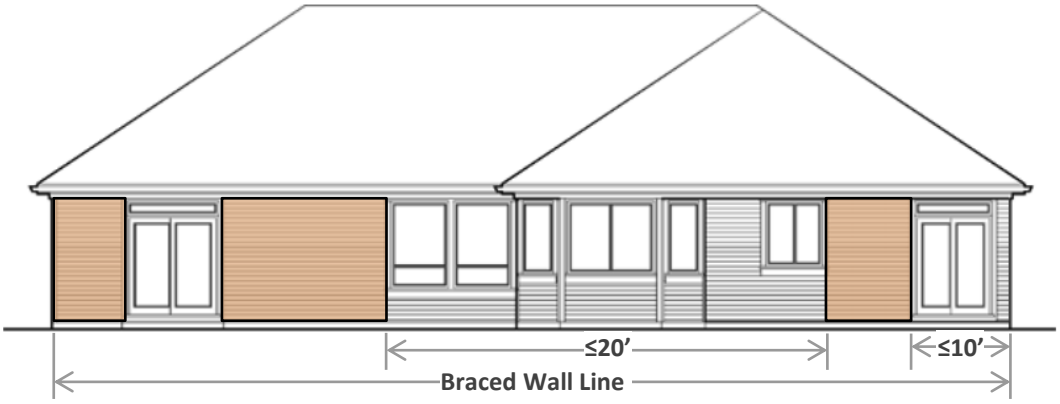

FIGURE 5: BRACED WALL PANELS ON BRACED WALL LINES

3. **Number:** Each braced wall line must have at least two braced wall panels. However, braced wall lines 16 feet long or less are permitted to have one braced wall panel provided it is at least 48 inches long.
4. **Amount:** The cumulative length of all braced wall panels must be greater than or equal to the required length specified by the code as determined in the steps below.

Step 1) Calculate the average spacing from the braced wall line you are designing to the next adjacent braced wall lines at each side of each end. Ensure no value exceeds 60 feet.

Step 2) Use TABLE 1 below to determine the unadjusted required amount of bracing based on number of stories above, braced wall line spacing and sheathing method. See Page 7.

TABLE 1: MINIMUM REQUIRED LENGTH (FEET) OF BRACING

Number of stories above braced wall line	Average spacing to adjacent braced wall line(s) (feet)	Methods LIB, GB	Methods WSP, SFB, PFH, PFG, CS-SFB	Methods CS-WSP, CS-G, CS-PF
0	10	3.5	2.0	2.0
	20	7.0	4.0	3.5
	30	9.5	5.5	5.0
	40	12.5	7.5	6.0
	50	15.5	9.0	7.5
	60	18.5	10.5	9.0
1	10	7.0	4.0	3.5
	20	13.0	7.5	6.5
	30	18.5	10.5	9.0
	40	24.0	14.0	12.0
	50	29.5	17.0	14.5
	60	35.0	20.0	17.0
2[1]	10	10.5	6.0	5.0
	20	19.0	11.0	9.5
	30	27.5	15.5	13.5
	40	35.5	20.5	17.5
	50	44.0	25.0	21.5
	60	52.0	30.0	25.5

[1] Not permitted for Method LIB

Step 3) Use TABLE 2 to determine the adjustment factors for the eave-to-ridge height of the roof, wall height, and number of braced wall lines in each plan direction, i.e., left-right or up-down.

Step 4) Multiply the value from TABLE 1 by all of the adjustment factors to determine the final amount of required bracing.

Step 5) Ensure the cumulative length of braced wall panels is greater than or equal to the required length of bracing in Step 4.

TABLE 2: ADJUSTMENT FACTORS FOR LENGTH OF BRACING

Adjustment	Stories above braced wall line	Condition	Adjustment factor
Eave-to ridge height of roof	0	≤ 5 ft	0.70
		10 ft	1.00
		15 ft	1.30
		20 ft	1.60
	1	≤ 5 ft	0.85
		10 ft	1.00
		15 ft	1.15
		20 ft	1.30
	2	≤ 5 ft	0.90
		10 ft	1.00
		15 ft	1.10
		20 ft	Not permitted
Wall height	any	8 ft	0.90
		9 ft	0.95
		10 ft	1.00
		11 ft	1.05
		12 ft	1.10
Number of braced wall lines	any	2	1.00
		3	1.30
		4	1.45
		≥ 5	1.60

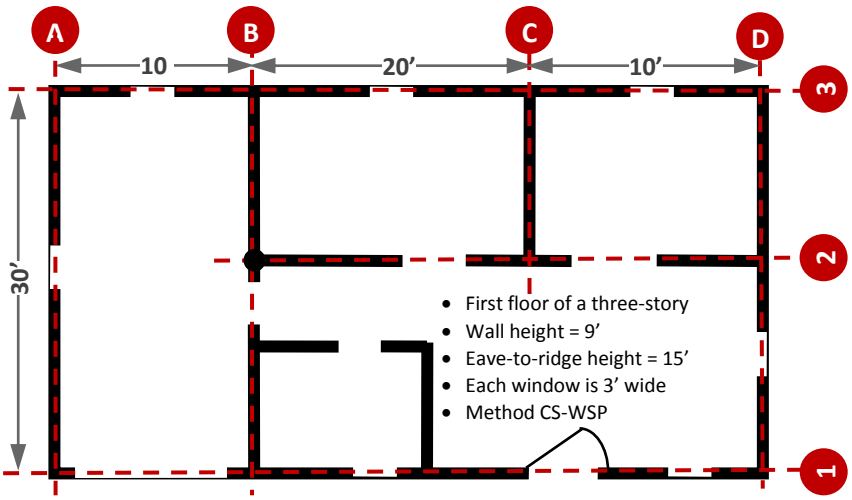

FOR EXAMPLE: Using the floor plan above, find the minimum amount of required bracing for BWL-D.

1. Find the average braced wall line spacing:
   - ✓ At the top of BWL-D, BWL-C is the next parallel braced wall line at 10 feet away.
   - ✓ At the bottom of BWL-D, BWL-B is the next parallel braced wall line at 30 feet way.
   - ✓ Therefore, the average spacing = **20 feet**.
2. From TABLE 1, with two stories above the braced wall line, a 20-foot spacing, and bracing Method CS-WSP, the minimum required length of bracing is **9.5 feet**.
3. From TABLE 2, the adjustment factors are:
   - ✓ **1.10** for the first of a three-story house with a roof eave-to-ridge height of 15 feet.
   - ✓ **0.95** for a wall height of 9 feet.
   - ✓ **1.45** since BWL-D runs up-down and there are a total of four braced wall lines in that direction.
4. The total minimum required amount of bracing for BWL-4 = 9.5 x 1.10 x 0.95 x 1.45 = **14.4 feet.**
5. The length of actual bracing along BWL-D equals the sum of the panels on each side of the window which would equal the wall length (30') minus the window width (3') or 27 feet > 14.4 feet.

BRACING METHODS

The type, material and configuration of sheathing methods vary. There are two types of bracing: **intermittent**, see FIGURE 6, where braced wall panels are placed at required locations only and all other areas are infilled with other material such as insulating foam, and **continuous-sheathing**, see FIGURE 7, where the entire face of the wall is sheathed, including areas above and below openings.

FIGURE 6: INTERMITTENT BRACING

In our region, continuous-sheathing is the predominant sheathing type for the exterior, while intermittent is most common for the interior. TABLE 3 below lists the most common bracing methods and a description of each.

FIGURE 7: CONTINUOUS-SHEATHING

Mixing different bracing methods in the same braced wall line is permitted provided the method which generates the highest required length of bracing per TABLE 1 governs the braced wall line design.

TABLE 3: COMMON BRACING METHODS

Methods, Materials	Minimum Thickness/Fasteners	Figure
Intermittent Methods		
LIB Let-in-bracing	1x4 wood or metal straps, 45° to 60° angles	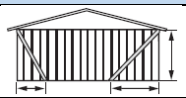
WSP Wood structural panel (OSB or plywood)	⅜" 8d nails @ 6" o.c. edge, 12" o.c. field	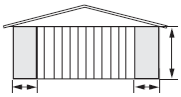
GB Gypsum board	½" Type W or S screws @ 7" o.c.	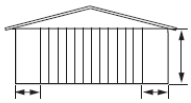
Continuous-Sheathing Methods		
CS-WSP Continuous-sheathing wood structural panel	⅜" 8d nails @ 6" o.c. edge, 12" o.c. field	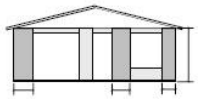
CS-PF Continuous-sheathing portal frame	$^{7}/_{16}$" fasten per FIGURE 9	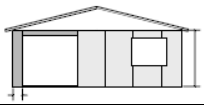

REQUIREMENTS FOR BRACED WALL PANELS

For wall segments to be considered braced wall panels, they must meet the following minimum requirements.

With the exception of Methods GB and CS-PF, the interior side of a braced wall panel must be finished with ½-inch gypsum board or an equivalent material such as paneling. For all methods except Method LIB, you may eliminate the interior finish material if you multiply the bracing determined in Step 3TABLE 1 by a factor of 1.40.

The corners at each end of a braced wall line with continuous-sheathing must be strengthened with braced wall panels, 24-inch return panels, hold-downs or combinations thereof as shown in FIGURE 8.

A braced wall panel must have a specific length based on its method and height. That dimension is called **minimum length** and is listed in TABLE 4. Minimum length for Method CS-WSP is also based on the vertical dimension of the adjacent opening. When a panel has an opening on each side of differing heights, the taller opening governs the panel length chosen from TABLE 4. See the example on Page 9.

Contributing length, as shown in TABLE 4, is the value in which the panels can contribute to the minimum required length of bracing. Certain methods contribute more than their actual length, and some contribute less. See the example on Page 9.

For those applications where it is difficult to place a full-length braced wall panel, **portal frames** are laboratory tested, narrow panels that can be constructed with common building materials. The most common portal frame is Method CS-PF, see FIGURE 9, which is permitted to be constructed up to 12 feet tall. For more information on how to construct a portal frame, consult the 2012 Virginia Residential Code at *fairfaxcounty.gov*.

TABLE 4: MINIMUM LENGTH OF BRACED WALL PANELS

METHOD		MINIMUM LENGTH (in) Wall Height 8 ft	9 ft	10 ft	11 ft	12 ft	CONTRIBUTING LENGTH (in)
WSP		48	48	48	53	58	Actual
GB		48	48	48	53	58	Double sided = Actual Single sided = 0.5 x Actual
LIB		55	62	69	NP	NP	Actual [2]
CS-PF		16	18	20	22 [3]	24 [3]	1.5 x Actual
CS-WSP	**Adjacent opening vertical dimension (in)**						
	≤ 64	24	27	30	33	36	Actual
	68	26	27	30	33	36	
	72	27	27	30	33	36	
	76	30	29	30	33	36	
	80	32	30	30	33	36	
	84	35	32	32	33	36	
	88	38	35	33	33	36	
	92	43	37	35	35	36	
	96	48	41	38	36	36	
	100		44	40	38	38	
	104		49	43	40	39	
	108		54	46	43	41	
	112			50	45	43	
	116			55	48	45	
	120			60	52	48	
	124				56	51	
	128				61	54	
	132				66	58	
	136					62	
	140					66	
	144					72	

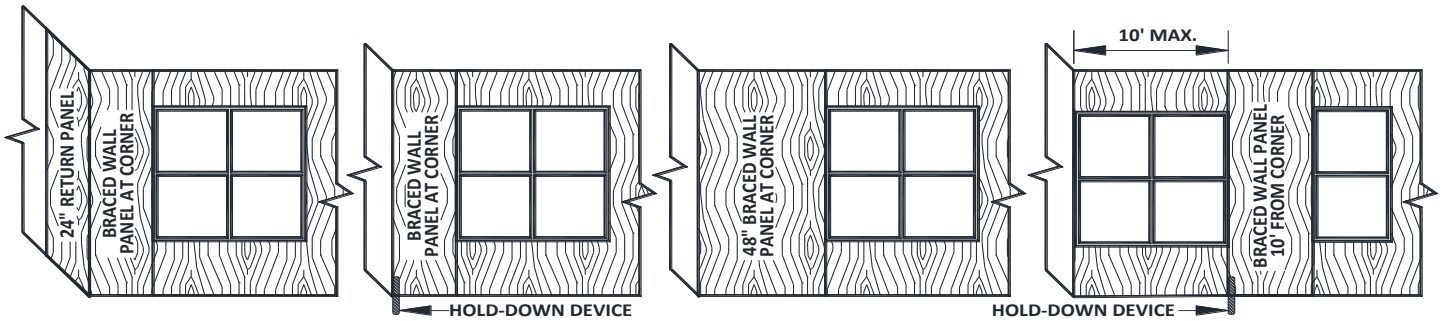

FIGURE 8: CONTINUOUS-SHEATHING CORNERS

EXAMPLE: Continuous-Sheathing Panel Length

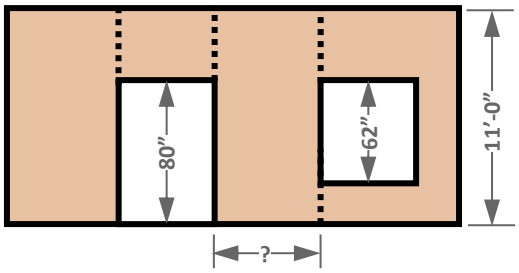

In the continuously sheathed braced wall line above, find the minimum length of the panel between the window and the door.

1. Use 80 inches as the governing opening height.
2. Use 11 feet as the wall height.
3. Per TABLE 4, the minimum length of the panel = 33 inches.

EXAMPLE: Contributing Length

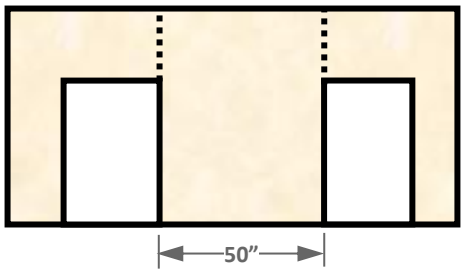

In the braced wall line above, calculate the contributing length of the 50-inch, single sided Method GB panel.

1. From TABLE 4, the formula for contributing length (single sided) = *0.5 x actual length*.
2. Therefore the contributing length = 50 x 0.5 = 25 inches.

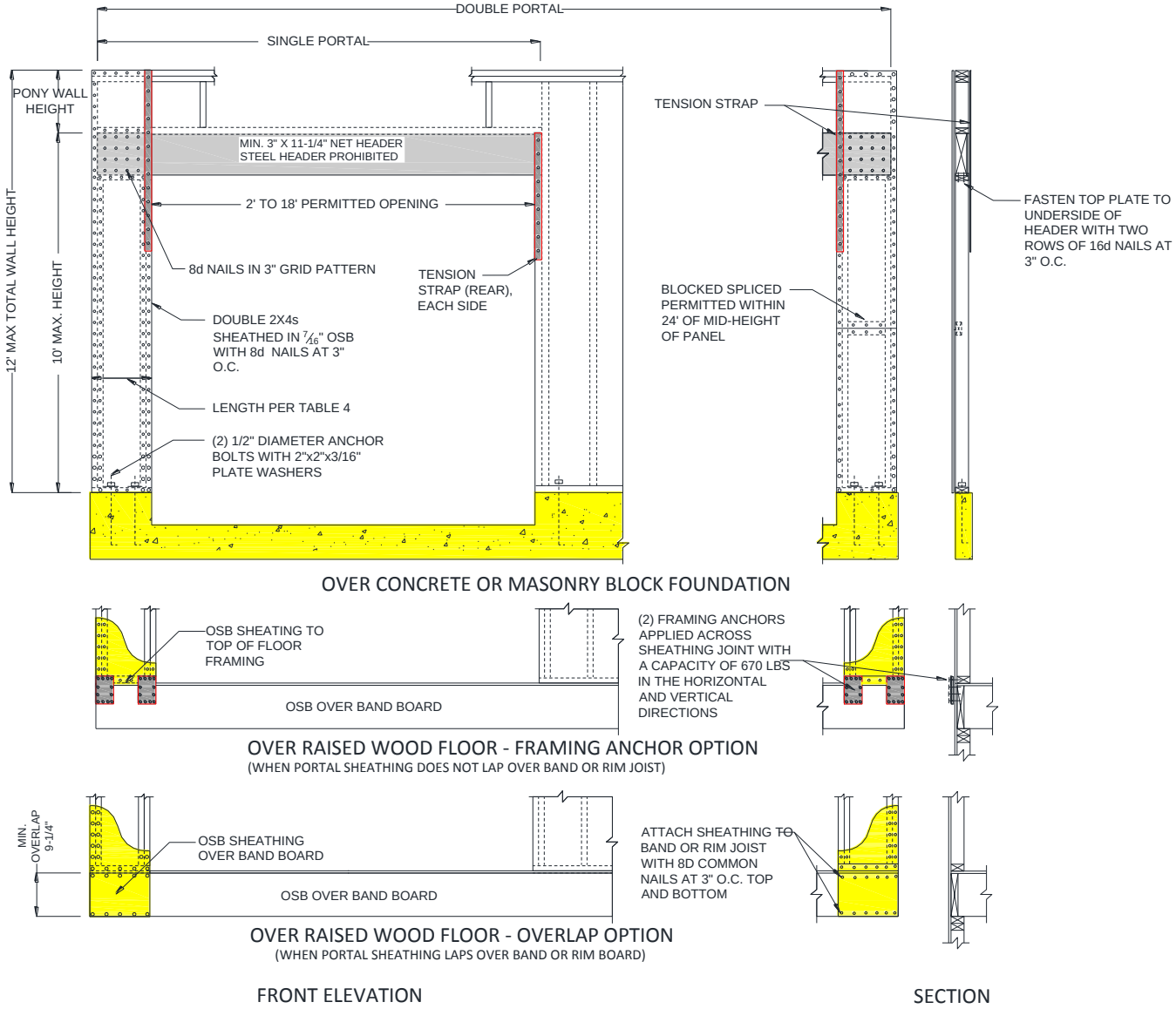

FIGURE 9: METHOD CS-PF

Companies, such as Simpson Strong-Tie, manufacture narrow products made of wood or steel that can fit within your braced wall line and be considered equal to the code-prescribed braced wall panels. For instance, a 12-inch wide manufactured panel, as shown to the right, can be placed in your braced wall line and be considered the same as a 48-inch braced wall panel. This can be quite useful if you need a lot of bracing, but have little wall length in which to place it.

Acceptable products must be listed with an associated evaluation report by a product evaluating agency such as the International Code Council-Evaluation Service.

BRACED WALL PANEL CONNECTIONS

Each element resisting horizontal forces in your house or addition needs to be able to support the applied wind load and pass it on to the next bracing element along the load path. This includes where braced wall panels connect to roof construction, floor construction or stem walls.

At the roof eave, blocking between the rafter or truss framing is required at braced wall panel locations when dimension D, as shown in FIGURE 10, is greater than 9¼ inches. For heights up to 15¼ inches, solid blocking is permitted as shown in FIGURE 11. For heights greater than 15¼ inches and up to 48 inches, provide vertical panels as shown in FIGURE 12. Heights greater than 48 inches require an engineered design.

Added framing or blocking is required below an interior braced wall panel when attached to floor construction as shown in FIGURE 13.

When a braced wall panel is 48 inches long or less and supported by a masonry or concrete stem wall, reinforcement in accordance with FIGURE 14 must be provided.

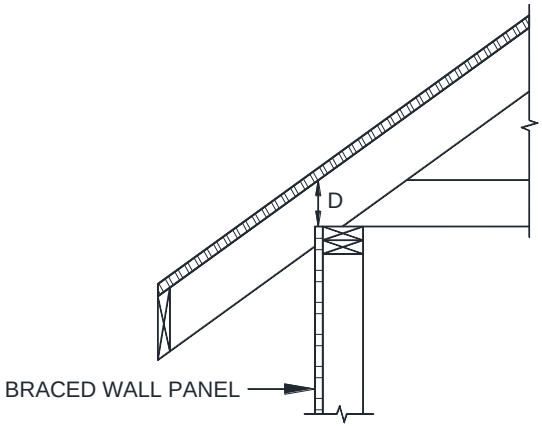

FIGURE 10: DISTANCE, D

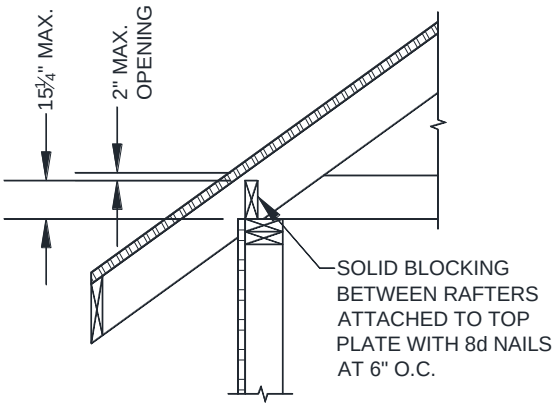

FIGURE 11: SOLID 2x BLOCKING

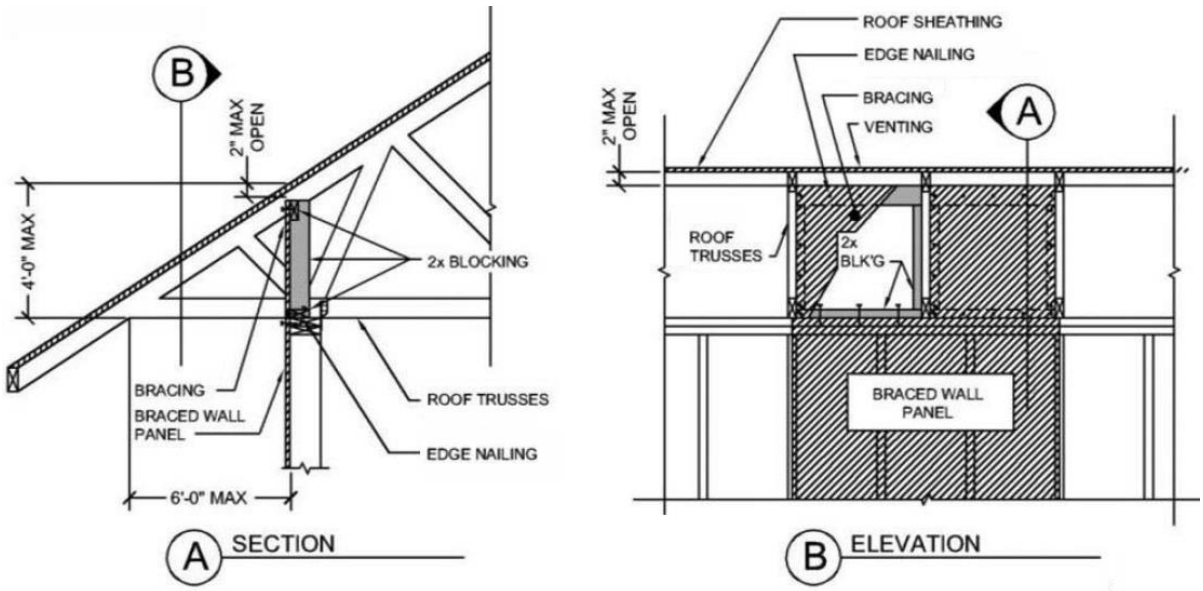

FIGURE 12: VERTICAL BLOCKING PANELS

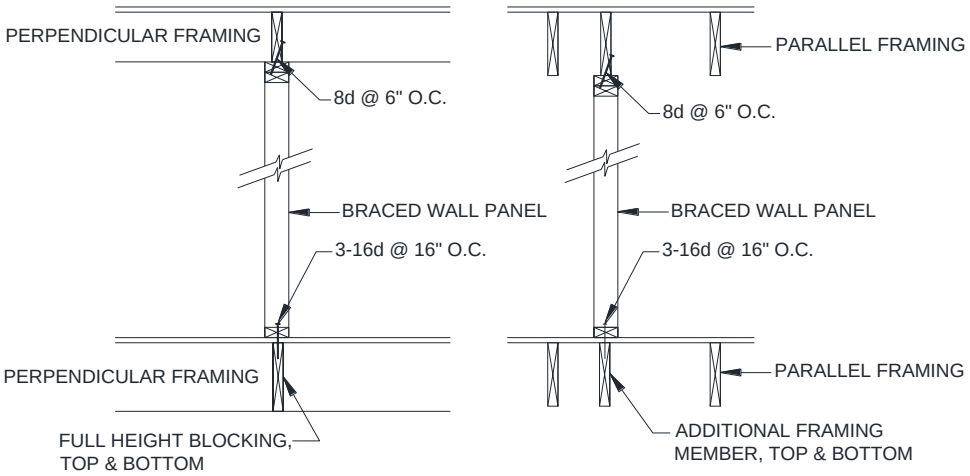

ATTACHMENT TO PERPENDICULAR FRAMING **ATTACHMENT TO PARALLEL FRAMING**

FIGURE 13: INTERIOR BRACED WALL PANEL AT FRAMING

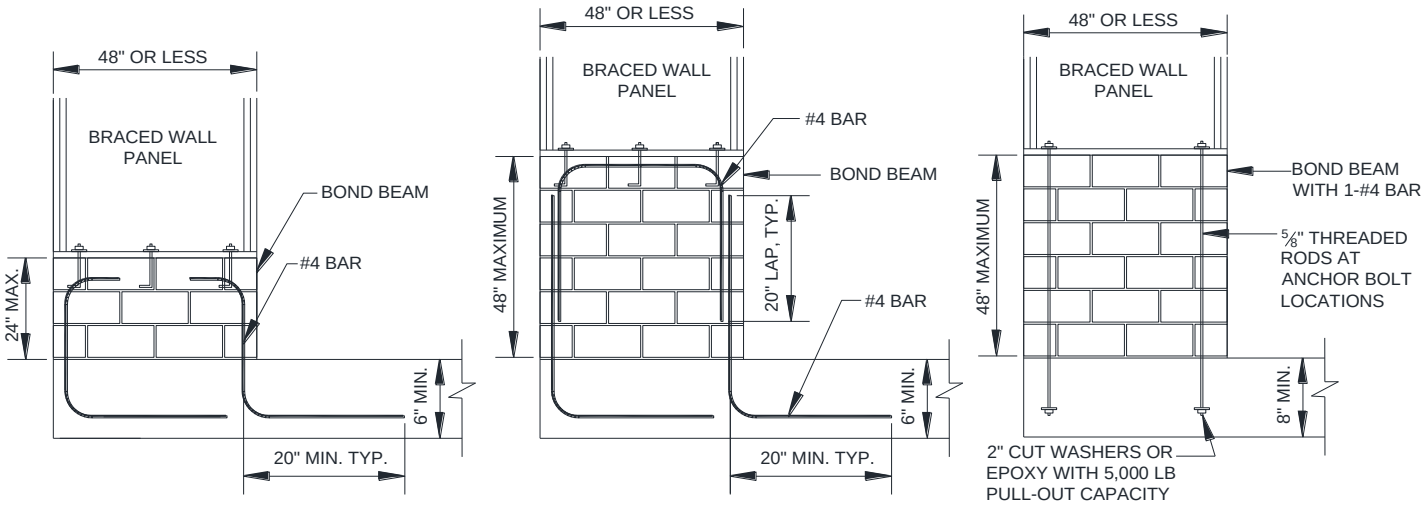

SHORT WALL REINFORCEMENT **TALL WALL REINFORCEMENT** **OPTIONAL REINFORCEMENT**

GROUT BOND BEAMS AND ALL CELLS WHICH CONTAIN REBAR, THREADED RODS AND ANCHOR BOLTS.

FIGURE 14: MASONRY STEM WALLS SUPPORTING BRACED WALL PANELS

ENGINEERED DESIGN

If you wish to deviate from the prescriptive code requirements, then your house or addition, or a portion thereof, must be designed by a Virginia licensed professional engineer. Use the following criteria to ensure a successful submission.

Determine the wind load on your house or addition using the 2010 edition of the ASCE-7 standard. For Fairfax County, the ultimate design wind speed is 115 mph with Wind Exposure Category B. Determine shear wall or diaphragm compliance using the 2008 edition of the "Special Design Provisions for Wind and Seismic" standard by the American Wood Council. Accepted engineering practice shall be employed in the submitted calculations which must include the following:

- ✓ A detailed wind load determination.
- ✓ A detailed design of the shear walls and/or diaphragms.
- ✓ Minimum aspect ratio of shear walls and/or diaphragms.
- ✓ Specification of the sheathing thickness, nail sizes and nailing pattern.
- ✓ A detailed analysis of all connections along the lateral load path.
- ✓ The original signature and seal of the professional engineer.

Calculations which do not meet these requirements will not be approved during the permit application and plan review process.

Pre-engineered steel moment frames, as shown below, from companies such as Simpson Strong-Tie are cost-effective alternatives to a fully engineered design. Each model is pre-engineered with a maximum load capacity outlined in the manufacturer's catalog.

While you will still need to employ a licensed engineer, he or she will simply need to calculate the amount of wind load delivered to the frame and then choose the correct model from the manufacturer based on its capacity.

Pre-engineered moment frames are particularly useful for lengths of wall with large openings and high amounts of load, such as the first floor of a three-story townhouse.

SUBMISSION REQUIREMENTS

All plans submitted to the county for permit application and plan review must have all braced wall lines, braced wall panels and method(s) clearly identified. Plans will not be approved otherwise.

An interactive worksheet to assist you with designing your wall bracing is available on the Fairfax County website. It is recommended that you submit the corresponding worksheets with your plans.

When submitting plans for a house that utilizes a proprietary system or an engineered design, the related evaluation report, manufacturer's catalog and/or calculations must be attached to the plans.

The drawings must also include comprehensive details outlining the construction requirements of the diaphragms and shear walls. These detail sheets must also bear the original signature and seal of the responsible professional engineer.

For more information, contact Building Plan Review via email or telephone at 703-222-0114, TTY 711 or go the Fairfax County website at *fairfaxcounty.gov* and search on "wall bracing."