FAIRFAX COUNTY PLANNING COMMISSION

September 1, 2011

PUBLIC HEARING FOR PLANNING DETERMINATION

Pursuant to

Va. Code Sec. 15.2 - 2232

Public Hearing Date: September 15, 2011 at 8:15 p.m.

Application Number:	**2232-D10-18**
Applicant:	**Newpath Networks, LLC, New Cingular Wireless PCS, LLC, and Sprint-Nextel Communications**
Proposed Use:	Telecommunications Facility
Subject Property:	Portions of VDOT rights of way on Tax Map Id. # 3-3, 8-1 Node #3 (GFE 3) (Utility Pole BH73 – Lat. 39'01'50.558", Long. -77'19'47.837"); Node #4 (GFE 4) (Utility Pole GG68 – Lat. 39'01'48.635", Long. -77'19'16.270"); Node #11(GFE 11) (Utility Pole HB81- (Lat. 39'01'21.307", Long. -77'16'37.932")]
Supervisor District	Dranesville
Size of Subject Property:	N/A
Area of Proposed Facility:	N/A

Application Accepted: August 25, 2010
Application Revised: August 31, 2011

Recommendation: In accordance with Va. Code Sec. 15.2-2232, as amended, staff recommends that the Planning Commission find the proposal by the Newpath Networks, LLC, New Cingular Wireless PCS, LLC and Sprint-Nextel Communications to modify three existing Sprint-Nextel distributed antenna system (DAS) nodes located on three existing, previously replaced Dominion Power Utility poles with the replacement of the existing Sprint-Nextel omni whip antennas (3 total) with three (3) panel antennas per node and associated equipment at each pole (connected to hub at 9916 Georgetown Pike) located within Virginia Department of Transportation rights-of-way near 11198 Beach Mill Road (Node #3 –Utility Pole BH73 – Lat. 39'01'50.558", Long. -77'19'47.837"); near 10903 Beach Mill Road (Node #4 -Utility Pole GG68 – Lat. 39'01'48.635", Long. -77'19'16.270") and near 9600 Beach Mill Road (Node #11 - Utility Pole GG68 – Lat. 39'01'21.307", Long. -77'16'37.932"), Great Falls, substantially in accord with provisions of the adopted Comprehensive Plan.

PLANNING DETERMINATION

Section 15.2 -2232 of the Code of Virginia

Number: 2232-D10-18

District: Dranesville

Acreage: n/a

Applicant: Newpath Networks, LLC, New Cingular Wireless PCS, LLC and Sprint Nextel Corporation

Subject Property: Virginia Department of Transportation Rights of Way on Tax Map #3-3; near 11198 Beach Mill Rd. (Node #3 (GFE3) - Utility Pole BH73 Lat. 39*01'50.558", Long. -77*19'47.837"); near 10903 Beach Mill Rd. (Node #4 (GFE4) - Utility Pole GG68 - Lat. 39*01'48.635", Long. -77*19'16.270"); Near 9600 Beach Mill Rd, (Node #11 (GFE11) - Utility Pole HB81. - Lat. 39*01'21.307", Long. -77*16'37.932").

Planned Use: Public Rights-of-way on parts of Beach Mill Rd.

Proposed Use: Telecommunications Distributive Antenna System (DAS)

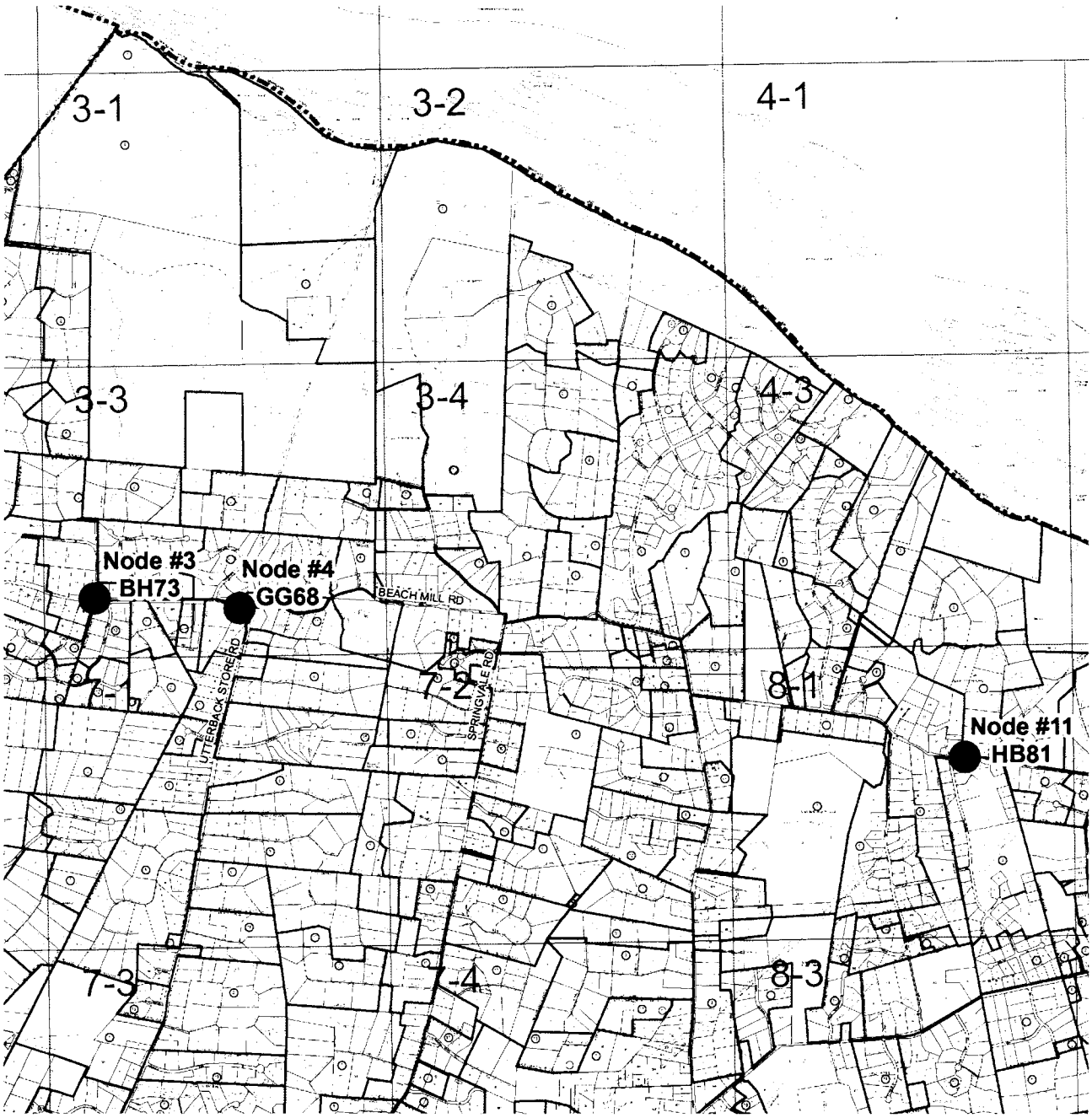

2500 FEET

PREPARED BY THE DEPARTMENT OF PLANNING AND ZONING
USING FAIRFAX COUNTY GIS

PLANNING DETERMINATION

Section 15.2 -2232 of the Code of Virginia

Number: 2232-D10-18

District: Dranesville

Acreage: n/a

Applicant: Newpath Networks, LLC, New Cingular Wireless PCS, LLC and Sprint Nextel Corporation

Subject Property: Virginia Department of Transportation Rights of Way on Tax Map #3-3; near 11198 Beach Mill Rd. (Node #3 (GFE3) - Utility Pole BH73 Lat. 39*01'50.558", Long. -77*19'47.837"); near 10903 Beach Mill Rd. (Node #4 (GFE4) - Utility Pole GG68 - Lat. 39*01'48.635", Long. -77*19'16.270"); Near 9600 Beach Mill Rd, (Node #11 (GFE11) - Utility Pole HB81. - Lat. 39*01'21.307", Long. -77*16'37.932").

Planned Use: Public Rights-of-way on parts of Beach Mill Rd.

Proposed Use: Telecommunications Distributive Antenna System (DAS)

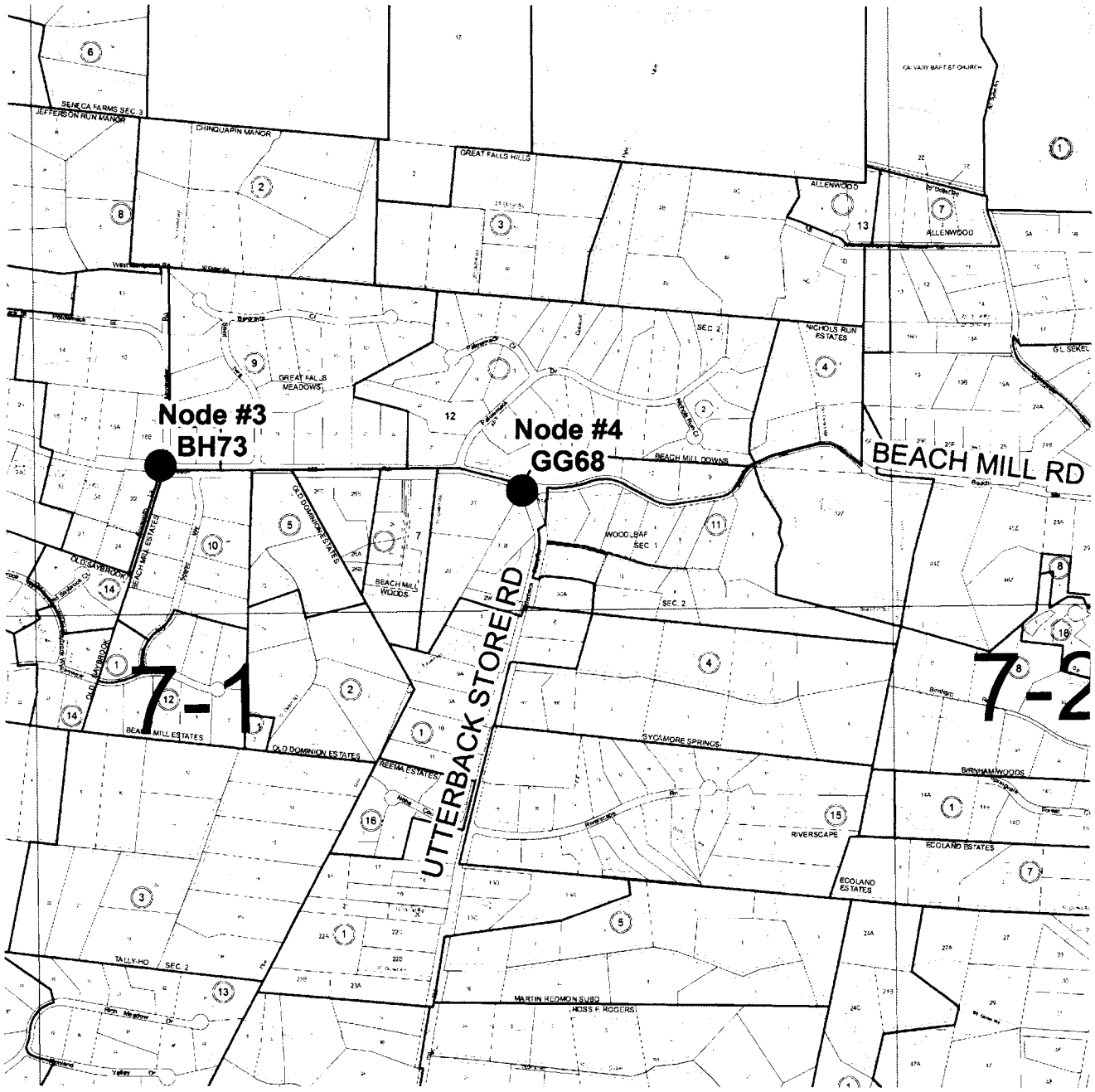

1000 FEET

PREPARED BY THE DEPARTMENT OF PLANNING AND ZONING
USING FAIRFAX COUNTY GIS

PLANNING DETERMINATION

Section 15.2 -2232 of the Code of Virginia

Number: 2232-D10-18

District: Dranesville

Acreage: n/a

Applicant: Newpath Networks, LLC, New Cingular Wireless PCS, LLC and Sprint Nextel Corporation

Subject Property: Virginia Department of Transportation Rights of Way on Tax Map #3-3; near 11198 Beach Mill Rd. (Node #3 (GFE3) - Utility Pole BH73 Lat. 39*01'50.558", Long. -77*19'47.837"); near 10903 Beach Mill Rd. (Node #4 (GFE4) - Utility Pole GG68 - Lat. 39*01'48.635", Long. -77*19'16.270"); Near 9600 Beach Mill Rd, (Node #11 (GFE11) - Utility Pole HB81. - Lat. 39*01'21.307", Long. -77*16'37.932").

Planned Use: Public Rights-of-way on parts of Beach Mill Rd.

Proposed Use: Telecommunications Distributive Antenna System (DAS)

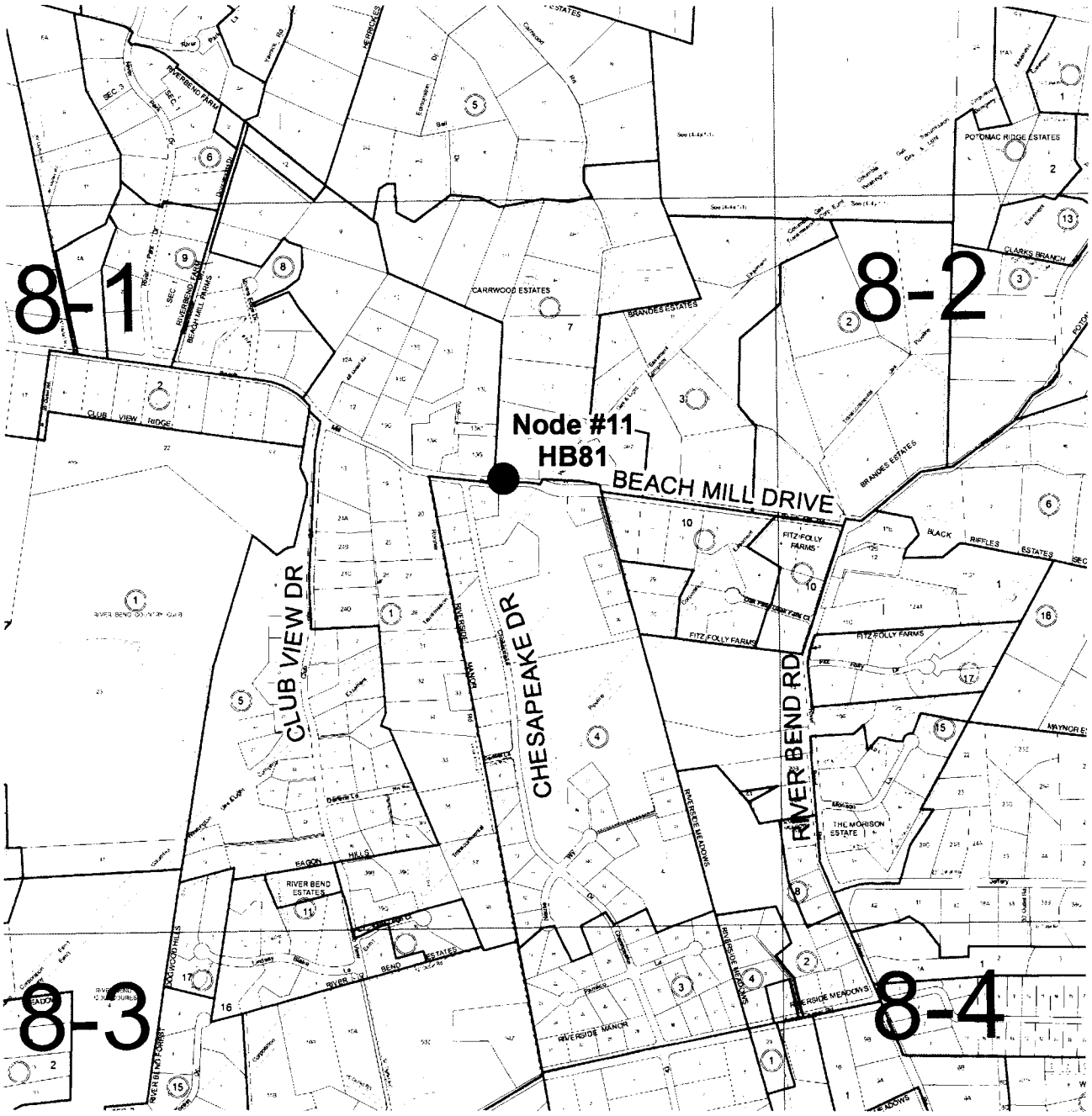

1000 FEET

PREPARED BY THE DEPARTMENT OF PLANNING AND ZONING
USING FAIRFAX COUNTY GIS

APPLICATION ***Attachment A***

PROPOSAL: Modification of three (3) existing Sprint-Nextel distributed antenna system ("DAS") nodes in Great Falls, VA. The modification will include the replacement of each of the existing Sprint-Nextel omni whip antennas (3 total) with three (3) panel antennas per node. Sprint-Nextel and New Cingular will share the new panel antennas. A cylindrical sheath (radome cap), painted light brown to match the existing poles, will cover the new panel antennas. Each antenna is 23" high x 10.3" wide x 5.5" deep. The cap is 6' high and 28" in diameter. An equipment box, for the use of New Cingular and Sprint-Nextel, with dimensions 44" high x 31" wide x 10" deep, will be installed on each pole replacing the current equipment box. The new cabinet is designed to be shared by multiple carriers. The previously approved (2232-D09-2) equipment hub for these three (3) nodes will be located at 9916 Georgetown Pike (Great Falls Volunteer Fire Station), Great Falls, VA.

APPLICANTS: Newpath Networks, LLC ("Newpath") and New Cingular Wireless PCS, LLC ("New Cingular"), and Sprint-Nextel Communications ("Sprint-Nextel") or ("applicants")

OWNER: Commonwealth of Virginia as represented by the Virginia Department of Transportation ("VDOT") owns rights-of-way; Dominion Virginia Power ("DVP") owns the utility pole.

SUBJECT PROPERTY: Great Falls area of Dranesville Magisterial District
Property Identification: Portions of Virginia Department of Transportation (VDOT) rights-of-way on Tax Maps 3-3; 8-1.
Location and Size: The nodes are located along Beach Mill Drive in the VDOT rights-of-way as follows:
Node #3 (GFE3) - near 11198 Beach Mill Road on DVP Utility Pole BH73 – Lat. 39'01'50.558", Long. -77'19'47.837");
Node #4 (GFE 4) - near 10903 Beach Mill Road on DVP Utility Pole GG68 – Lat. 39'01'48.635", Long. -77'19'16.270" and
Node #11(GFE 11) - near 9600 Beach Mill Road (- DVP Utility Pole GG68 – Lat. 39'01'21.307", Long. -77'16'37.932")
The proposed antennas and equipment boxes will be located on existing DVP utility poles and no land area will be encumbered at the node sites.

Site Features: Two lane roads; roadside overhead utility distribution lines and utility distribution poles; tree cover along DAS route varies from light to dense.

JUSTIFICATION: According to the applicants, telecommunication carriers must locate antenna sites according to a network design within relatively limited geographic parameters in order to provide uninterrupted coverage. When carriers cannot locate a site within these geographic parameters, network uses will pass through an area where the lost signal results in interrupted or "dropped" calls. In addition, an incomplete system is not consistent with New Cingular's requirements to provide continuous coverage.

Furthermore, the applicants state that the coverage areas for the three (3) nodes are shown on the propagation maps. New Cingular's primary objective for the entire Great Falls systems is to provide coverage on River Bend road (from Beach Mill Road to Georgetown Pike), Georgetown Pike (from River Bend Road to I-495) and portions of Old Dominion Road (from Georgetown Pike to I-495) and surrounding residential communities. The applicants state that DAS is a beneficial way to meet wireless coverage objectives in the Great Falls area while protecting its scenic and historic character. Future users of nodes, equipment cabinets or any additional sites will be subject to 2232 review and approval.

BACKGROUND: Node #3 and #4 were originally approved in 2232-D05-14. Node #11 was approved in 2232A-D05-14-1 by relocating the node at DVP utility pole HB33 to DVP utility pole at SG1. Subsequently identification code for replacement DVP utility pole SG1 was changed to HB81. Staff confirmed the DVP utility pole identification for each node. All the nodes will be connected to a hub facility located at 9916 Georgetown Pike (Great Falls Volunteer Fire Station.) The enclosed telecommunications compound was originally approved under 456-D97-3 and 2232-D09-2.

Dominion Power has been contacted to confirm the use of the poles for the proposed telecommunications facilities as the identified Nodes #3, #4 and #11. In addition, DVP was requested to indicate the time period that these DVP utility poles will be available for the proposed telecommunication use. The response was not available by the time the staff report was sent to the Planning Commission. This response will be forwarded to the Planning Commission in an addendum to the staff report.

The applicants were requested to provide their letter from Dominion Power that confirms the acceptability of the nodes at specific DVP utility poles for the antenna modification. This correspondence which has been provided by the applicants in previous 2232 applications concerning distributive antenna systems has not yet been provided to staff or the Planning Commission by the applicants for this case. Nor have the applicants provided a requested letter stating that if a 2232 approved DVP utility pole is not able to function as the approved node that the applicants will seek 2232 approval prior to relocating the node to a DVP utility pole or any other structure.

PROPOSED USE: The applicants requests approval of the modification of the antennas and related equipment for three existing Sprint-Nextel DAS nodes (Node #3 (GFE 3), Node #4 (GFE 4) and Node #11 (GFE 11)) located at points within the VDOT rights-of-way along Beach Drive facilitate the New Cingular Wireless and Sprint-Nextel using of these nodes in the Great Falls area. Nodes 3, 4, and 11, as amended, will include the following (all dimensions are approximate):

- DVP Poles – Node 3 will be 60' 6" in height, 18" radius; Node 4 will be 59' 6" in height, 18" radius; and Node 11 will 54' 11" in height, 18" radius.
- Antennas – Three antennas on each node: 22.8" high x 10.3" width x 5.5" depth at the top of each pole enclosed in a radome cap.
- Equipment – equipment cabinets will be attached to the side of the DVP utility pole that is designated as one of the three nodes. The three proposed equipment cabinets will have the following measurements: 44.50" high x 31.02" wide x 10.21" depth. No equipment will be on the ground at a node site.

- Hub Facility – The hub facility is located at 9916 Georgetown Pike (Great Falls Fire Department) and was approved in a previous 2232. The proposed nodes are connected to the hub by aerial fiber optic cable.
- Operations – The facility will operate automatically and will not require personnel or hours of attendance; operates 24 hours/day, 365 days/year; routine repair/maintenance visits by service technicians.

Future users of nodes, equipment cabinets or any additional sites will be subject to 2232 review and approval.

Off-Site Impacts: Applicants states that the proposed facility will have no impact on traffic, light, pollution, air quality, water quality or radiation on adjoining properties. According to the application, this proposal is a simple modification of the three existing DAS nodes so that there will be minimal visual impact on the surrounding properties. The applicants further state that to accommodate the applicants' needs, additional vertical structures will not be built in the area for the purpose of telecommunications. The modified DAS nodes will have the positive impact of enabling motorists and residents within the reach of the signal to be served by wireless telecommunication.

Alternatives Sites: The applicants propose to modify existing DAS nodes at three existing DAS node locations, for the purposes of collocation of telecommunication providers' antennas and equipment boxes. New DAS node locations were not proposed, therefore it was not necessary to consider alternative sites for this application.

DESCRIPTION OF SURROUNDING AREA

Character and Adjoining Land Uses:
Much of the land surrounding the three nodes is nearby tree cover or in a tall tree cover area. Except for Node 3 (BH73) the node sites adjoin wooded property. Node 3 has tall woods as a backdrop from the other side of Beach Mill Road. In addition, mailboxes, road signs, and pole-mound equipment boxes are visible at eye-level on portions of Beach Mill Road. Land uses along Beach Mill Road can be summarized as residential, private recreation and open space uses.

COMPREHENSIVE PLAN PROVISIONS

COMPREHENSIVE PLAN MAP:
Planning Area, District and Sectors:
Area III, Upper Potomac Planning District
- UP1 – Riverfront Community Planning Sector
- UP2 – Springvale Community Planning Sector

Land Use Recommendations:
The 3 node sites area surround by land planned for large lot, low density residential use, with recommended densities of 0.1-0.2 or 0.2-0.5 dwelling unit per acre ("du/ac").

Node 3 (BH73)
North – 0.1-0.2 du/ac; East – 0.1-0.2 du/ac; South – 0.2-0.5 du/ac; West – 0.1-0.2 du/ac

Node 4 (GG68)
North – 0.1-0.2 du/ac; East – 0.2-0.5 du/ac; South – 0.2-0.5 du/ac; West – 0.2-0.5 du/ac

Node 11 (HB81)
North – 0.1-0.2 du/ac; East – 0.1-0.2 du/ac; South – 0.2-0.5 du/ac; West – 0.2-0.5 du/ac

COMPREHENSIVE PLAN CITATIONS: An assessment of this proposal for substantial conformance with land use and design recommendations of the Comprehensive Plan ("the Plan") is guided by the following citations from the Plan:

Area Plan:

In the Fairfax County Comprehensive Plan 2011 edition, Area III, Upper Potomac Planning District as amended through July 27, 2010, UP1-Riverfront Community Planning Sector, Recommendations, Land Use; page 84; the Plan states:

> "2. This sector is planned for low density, single family residential use mostly .1-.2 du/ac as shown on the Comprehensive Plan map..."

In the Fairfax County Comprehensive Plan 2011 edition, Area III, Upper Potomac Planning District as amended through July 27, 2010, UP2-Springvale Community Planning Sector, Recommendations, Land Use, page 91; the Plan states:

> "1. Land use in this sector should continue to reflect and support the established low density residential character..."

Policy Plan:
Fairfax County Comprehensive Plan, Policy Plan, 2011 Edition; Public Facilities, as amended through January 10, 2005; **MOBILE AND LAND-BASED TELECOMMUNICATION SERVICES, GENERAL GUIDELINES**, pages 37 – 39:

> "**Objective 42: In order to provide for the mobile and land based telecommunication network for wireless telecommunication systems licensed by the Federal Communications Commission, and in order to achieve opportunities for the collocation of related facilities and the reduction of their visual impact, locate the network's necessary support facilities which include antennas, monopoles, lattice towers and equipment buildings in accordance with the following policies.** ...
>
> Policy a. Avoid the construction of new structures by locating mobile and land-based telecommunication facilities on available existing structures . . . when the telecommunication facilities can be placed inconspicuously to blend with such existing structures.
>
> Policy c. Subject to the availability and feasibility of a public site, when multiple sites have equal opportunity to minimize impacts, consider public lands as the preferred location for new structures. . . .

Policy g. Ensure that the use of public property by mobile and land based telecommunication facilities does not interfere with the existing or planned operational requirements of the public use.

Policy h. Design, site and/or landscape mobile and land-based telecommunication facilities to minimize impacts on the character of the property and surrounding areas. Demonstrate the appropriateness of the design through facility schematics and plans which detail the type, location, height, and material of the proposed structures and their relationship to other structures on the property and surrounding areas.

Policy i. Demonstrate that the selected site for a new monopole and tower provides the least visual impact on residential areas and the public way. Analyze the potential impacts from other vantage points in the area to illustrate that the selected site provides the best opportunity to minimize the visual impact of the proposed facility.

Policy j. Mitigate the visual impact of proposed telecommunication structures, and their antennas and ancillary equipment, using effective design options appropriate to the site such as:

- blending facilities with an existing pattern of tall structures;
- obscuring or blocking the views of facilities with other existing structures, vegetation, treecover, . . . to the maximum extent feasible;
- increasing the height of or replacing existing structures to reduce the need for another structure when such height increases or structure replacements are appropriate to the site and the surrounding area.

Objective 43: Design telecommunication facilities to mitigate their visual presence and prominence, particularly when located in residential areas, by concealing their intended purpose in a way that is consistent with the character of the surrounding area. . . .

Policy b. Design telecommunications facilities that are disguised and camouflaged to be of a bulk, mass and height typical of and similar to the feature selected;

Policy c. Use appropriately other new and existing structures and vegetation of comparable form and style to establish a grouping that complements a camouflaged telecommunication facility and supports its design, location and appearance."

Fairfax County Comprehensive Plan, Policy Plan, 2011 Edition; Public Facilities as amended through January 10, 2005; **Mobile and Land-based Telecommunication Services**, page 46: Figure 14 shows a telecommunications facility (not in Fairfax County), consisting of a 7-foot radome cap (antennas are concealed inside) attached to the top of an electrical distribution pole and equipment box located on the distribution pole.

STAFF ANALYSIS:
Department of Planning and Zoning

Zoning Administration Division – Ordinance Administration Branch ***Attachment B***
Findings: Properties are zoned R-E District and are not located within or along major thoroughfares. Pole #HB81 (Node 11) meets Par. 2A of the Sec. 2-514 of the Zoning Ordinance. However, Poles #BH73 (Node3) and #GG68 (Node4) do not meet Par. 2A because the antennas extend more than 8.5 feet above the pole, therefore, special exception approval is required for these two proposed installations. In addition, Pole #GG68 (Node4) appears to not be located entirely in the right-of-way. Par. 2A is only applicable when located within road right-of-way. Therefore, even if the pole height were reduced, the proposed installation on this pole would still require special exception approval.

Note: The applicants modified their proposal so that the Sprint-Nextel whip antenna was removed and replaced by three antennas enclosed by a radome cap at each node. The antennas extend only 6 feet above the top of the utility pole. The applicants also corrected the location of Pole #GG68 (Node 4) as it is located entirely within the right-of-way. Therefore a special exception was not necessary concerning the height of the antenna extension or node location.

Planning Division – Facilities Planning Branch
Findings: Staff visited the 3 DAS node sites proposed for antenna modifications to determine if the extent of visual impact. The increased height for each node is as follows: Node #3 – approximately 2 feet 10 inches higher; Node #4 – approximately 2 feet 11 inches higher and Node #11 – approximately 2 feet 9 inches higher. The 28" diameter of the radome cover extends 5 inches (total of 10 inches) beyond the 18 inch diameter of the telephone pole. Neither the change in height or the increase in the diameter of the radome antenna cover results in a significant visual impact. The slender design and muted light brown color of the radome cap facilitate the blending of the node with surrounding trees and vegetated landscape. Based on field observations and the applicants' plans and photographic simulations, staff concludes that the increased height and diameter due to antenna modifications would have no significant adverse visual impact on the surrounding properties.

CONFORMANCE WITH THE COMPREHENSIVE PLAN

Va. Code Sec. 15.2-2232, as amended, requires the Planning Commission to determine whether the general location or approximate location, character, and extent of the proposed facility, as amended, are substantially in accord with the adopted Comprehensive Plan.

LOCATION: The modification of the 3 nodes proposed in the subject 2232 application and located within an existing DAS network, will be collocated on existing DVP utility distribution poles located on public property owned by the Commonwealth of Virginia (administered by the Virginia Department of Transportation) and planned and developed for public street right-of-way

purposes. Staff concluded this is consistent with Plan recommendations to avoid the construction of new structure and facilitate collocation of telecommunication facilities on an existing structure.

In general, the proposed light brown colored cap enclosure for the proposed antennas blends with surrounding tall trees adjacent to each node's DVP utility pole along the southern side of Beach Mill Drive. In the case of Node 3, located on the northern side of Beach Drive, the view from residences of the DVP utility pole and antenna with cap enclosure is seen with a backdrop of tall trees. Although there may be some filtered views from certain properties, the tree monopole will blend with the existing tall tree stands and should not have significant impact on the overall area or the public ways.

The proposed location has been determined ideal for adequate service for this facility consistent with the Plan guidelines. The proposed facility is proposed to improve in-building residential coverage to the areas near and around the subject nodes including River Bend road (from Beach Mill Road to Georgetown Pike), Georgetown Pike (from River Bend Road to I-495) and portions of Old Dominion Road (from Georgetown Pike to I-495) and surrounding residential communities. Finally, the proposed telecommunications facility is not located within a flood plain or other environmentally sensitive area, in accordance with Plan Guidelines.

CHARACTER: The applicants' proposed antenna and related equipment on existing nodes on existing DVP utility poles in VDOT right of way is appropriate since the minimal height and diameter increases by the antenna modification will be compatible with the character of other existing utility poles nearby and along the roadway. Furthermore, the concealment of the proposed panel antennas by a light brown radome cap facilitates the blending of the proposed telecommunication facility with the utility pole and surrounding trees and nearby vegetated landscape. There should be no significant visual impact on nearby properties from the proposed modifications. The existing trees and other vegetation located along the roads should effectively screen and buffer views of the proposed antennas and related equipment on the nodes from nearby residential areas and thus mitigate their visual presence and prominence upon the surrounding area in support of Plan objectives.

Therefore, staff concludes that the proposed facility should not have a negative visual impact on the overall character of the surrounding area which is consistent with Plan objectives. Given the applicants coverage objectives in Great Falls, and given the low density rural character of Great Falls, staff concludes that the subject application balances these two factors such that the proposal will have minimal adverse impact on the surrounding areas consistent with Plan recommendations.

EXTENT: Although the applicants propose to increase the height of the DVP utility poles and the diameter of the upper part of the utility pole where the radome cap covers the proposed antennas, the increases in height and diameter are minimal when compared with the overall dimensions of the node. The pole heights are no greater than required to achieve service area requirements. With no equipment on the ground, staff believes there should be no significant impact on the use or operational requirements of the public right-of-way, as recommended by the Plan.

Figure 14 on page 46 in the "Public Facilities" section of the Policy Plan illustrates a type of communications facility consisting of an antenna concealed inside a radome cap atop a utility pole, and a pole-mounted equipment box. The antenna modifications to the three nodes are very similar in character and extend to the facility shown in Figure 14, and thus are consistent with the intent of the Comprehensive Plan to utilize existing poles for telecommunications facilities to avoid constructing new monopoles. Therefore, staff conclude that the extent of the proposed modification of the DAS node conforms with the Comprehensive Plan.

CONCLUSIONS AND RECOMMENDATIONS

Staff concludes that the subject proposal by Newpath Networks, LLC, New Cingular Wireless, PCS, LLC and Sprint-Nextel Communications, as amended, to modify three existing Sprint-Nextel distributed antenna system (DAS) nodes located on three existing, previously replaced Dominion Power Utility poles with the replacement of the existing Sprint-Nextel omni whip antennas (3 total) with three (3) panel antennas per node and associated equipment at each pole (connected to hub at 9916 Georgetown Pike) located within Virginia Department of Transportation rights-of-way near 11198 Beach Mill Road (Node #3 –Utility Pole BH73 – Lat. 39'01'50.558", Long. -77'19'47.837"); near 10903 Beach Mill Road (Node #4 -Utility Pole GG68 – Lat. 39'01'48.635", Long. -77'19'16.270") and near 9600 Beach Mill Road (Node #11 - Utility Pole GG68 – Lat. 39'01'21.307", Long. -77'16'37.932"), Great Falls, satisfies the criteria of location, character, and extent as specified in Va. Code Sec. 15.2-2232, as amended. Staff therefore recommends that the Planning Commission find the subject Application **2232-D10-18**, as amended, substantially in accord with provisions of the adopted Comprehensive Plan.

COUNTY OF FAIRFAX, VIRGINIA

APPLICATION FOR DETERMINATION PURSUANT TO SECTION 15.2–2232 OF THE CODE OF VIRGINIA

Application Number: _____
(assigned by staff)

The application contains three parts: I. Application Summary; II. Statement of Justification; and III. Telecommunication Proposal Details.

(Please Type or Print All Requested Information)

RECEIVED
AUG 31 2011
DEPARTMENT OF PLANNING & ZONING
ZONING ADMIN.

PART I: APPLICATION SUMMARY

ADDRESS OF PROPOSED USE

Street Address Varies - See node chart

City/Town Great Falls, VA Zip Code 22066

APPLICANT(S)

Name of Applicant Newpath Networks, LLC/New Cingular Wireless PCS, LLC and Sprint - Nextel corporation

Street Address 1300 N Northlake Way

City/Town Seattle State WA Zip Code 98103

Telephone Number: Work (724) 416-2417 Fax (724) 416-4417

E-mail Address robert.ritter@crowncastle.com

Name of Applicant's Agent/Contact (if applicable) Gregory S. Tully

Agent's Street Address 7380 Coca Cola Drive

City/Town Hanover State MD Zip Code 21076

Telephone: Work (443) 992-3450 Fax (410) 712-4056

PROPOSED USE

Street Address VDOR Rights-of-Way (ROW's)

Fairfax Co. Tax Map and Parcel Number(s) Varies - See Node Chart

Brief Description of Proposed Use

The modification of three (3) existing outdoor distributed antenna system node locations. Each modification includes replacing an existing whip antenna with three (3) panel antennas within a stealth cap enclosure as well as the replacement of a pole attached equipment box with a similar pole attached equipment box. As the three (3) existing outdoor distributed antenna system nodes included replacement poles under previous 2232 applications, no utility pole modifications are part of this application, and the overall structure heights remain the same.

Total Area of Subject Parcel(s) NA (acres or square feet)

Portion of Site Occupied by Proposed Use NA (acres or square feet)

Fairfax County Supervisor District Dranesvilles

Planned Use of Subject Property (according to Fairfax County Comprehensive Plan)
VDOT ROW

Zoning of Subject Property Varies - See Node Chart

List all applicable Proffer Conditions, Development Plans, Special Exceptions, Special Permits or Variances previously approved and related to this site

2232-D06-2, 2232-D09-2

PROPERTY OWNER(s) OF RECORD

Owner Virginia Department of Transportation

Street Address 1221 East Broad Street

City/Town Richmond State VA Zip Code 23219

PART II, *entitled "Statement of Justification," pages 4 through 6, shall be completed by all applicants and included as part of the application.* ***PART III,*** *entitled "Telecommunication Proposal Details," pages 7 through 9, also shall be completed and included for all proposed telecommunication uses.*

Name of Applicant or Agent Gregory S. Tully

Signature of Applicant or Agent

Date 8/31/11

****

Submit completed application to:

Fairfax County
Department of Planning and Zoning, Planning Division
Herrity Building
12055 Government Center Parkway, Suite 730
Fairfax, Virginia 22035

Please do not staple, bind or hole-punch this application. Please provide at least one copy of all pages, including maps and drawings, on 8.5 x 11 inch paper.

****

FOR STAFF USE ONLY

Date application received: 8/25/2010

By: ale for DM

Additional information requested to complete application:

Date application accepted: 8/31/2011

By: ale

PART III: TELECOMMUNICATION PROPOSAL DETAILS

Please complete and provide all requested information. If question is not applicable to the proposed use, please indicate with N/A.

PROPOSED TELECOMMUNICATION USE

Use is (check one):

- ☐ New structure (monopole, tower or camouflaged facility)
- ☑ Replacement of existing pole or tower at same location with another pole or tower
- ☐ Antenna placement on building or penthouse facade
- ☐ Antenna placement on building or penthouse rooftop
- ☐ Collocation on other existing telecommunications structure (monopole or tower)
- ☐ Collocation on other non-telecommunications structure (such as an electric transmission tower/pole, utility pole, water tower, etc.)
- ☐ Modification to telecommunications facility previously approved for same applicant:
  Prior 2232 Review application number: _____
  Date of Planning Commission approval: _____

PROJECT DETAILS

1. ANTENNA

Number and Type: Three (3) Kathrein 65 Multiband Directional Antenna (per node)
Dimensions: height 22.8" width 10.3" depth 5.5" diameter _____
Location / Placement: On top of existing Dominion utility distribution pole within stealth canister
Wattage: 250 W
Material and Color: Metal, white - antenna, metal, brown - stealth cannister (light brown)
Material and Color of the Antenna Mounting: Metal
Height Above Ground: Varies - See node chart

2. EQUIPMENT

Number and Type of Cabinets or Structures: EMI Equipment Cabinets (1 per node pole)
Cabinet / Structure Dimensions: height 44.50" width 31.01" depth 10.21"
Height of equipment platforms, if any: NA
Material and Color: Metal, white
Location: Attached to utilty distribution pole
Method of Screening: NA

3. STRUCTURE ON WHICH ANTENNAS WILL BE MOUNTED

Maximum Height: Varies - See node chart
Material: Wood
Color: Brown
If structure is within a utility right-of-way, state right-of-way width:
Varies - See node chart

If the proposed structure will replace an existing pole or tower, provide dimensions of the existing structure:

Height of Structure to be Replaced: Varies - See node chart

Diameter or Overall Footprint of Structure to be Replaced: Varies - See Node Chart

4. ADDITIONAL INFORMATION

The following information, as relevant to the proposal, shall be included:

A. ELEVATIONS: Structural elevation drawings showing the placement of the antenna and the related equipment on the existing or proposed structure;

B. ANTENNA: Details showing the antenna and antenna mountings and the location of the antenna on the building or structure;

C. BUILDING ROOF PLAN AND CALCULATION: If located on a building rooftop, provide a roof plan at a scale of 1"= not more than 20' showing all existing penthouses, structures and mechanical equipment on the roof and the location of the proposed antenna and related telecommunications equipment. Include a calculation stating 1) the percentage of the roof which is covered by all existing structures, and 2) the percentage that will be covered by all existing structures plus the proposed antennas, equipment cabinets and shelters;

D. SCREENING: Details of screening for the equipment structure and/or antenna structure showing type of screening material, dimensions and placement; if landscaping is provided, list the height of the landscaping at time of planting and the ultimate height;

E. PROPERTY PLAT: A plat of the property prepared by a certified engineer showing the location of the proposed ground equipment structure and antenna, the relationship to other structures on site, with measured distances from all property boundaries or easement lines if the structure or antenna is placed in an easement;

F. PHOTOGRAPHS: For collocations on existing buildings or other structures such as power poles or towers, provide photographs of the building or structure showing the proposed placement of the antenna and related equipment;

G. PHOTOGRAPHIC SURVEY: For proposed structures, provide a photographic survey of the project site. Photographs should be taken from the subject property boundaries at four or more locations to show on- and off-site views of the subject property and to identify the proposed location of the facility on the site. The number of photos submitted will vary according to site size but should be adequate to view the entire site;

August 19, 2010

Mr. James P. Zook, Director
Fairfax County Department of Planning and Zoning
12055 Government Center Parkway, Suite 730
Fairfax, Virginia 22035-5505

RE: Nodes 3, 4 and 11 2232 Submitted by Newpath Networks and New Cingular Wireless PCS, LLC BY: AT&T Mobility Corporation Its: Manager
Great Falls Phase II DAS Project

Dear Mr. Zook:

Newpath Networks, Inc. ("Newpath"), New Cingular Wireless PCS, LLC and the Sprint-Nextel Corporation respectfully request that the Fairfax County Planning Commission make a determination pursuant to sec. 15.2-2232 of the Code of Virginia that Newpath's proposed nodes 3, 4 and 11 are substantially in accord with the Fairfax County Comprehensive Land Use Plan. This is part of the second phase of this DAS system.

APPLICANT:

NewPath Networks, LLC
1300 N Northlake Way
Seattle, WA 98103

New Cingular Wireless PCS, LLC
By: AT&T Mobility Corporation, Its: Manager
7150 Standard Drive
Hanover, Maryland 21076

Sprint-Nextel Corporation
27755 Stansbury Blvd.
Farmington Hills, MI 48334

SITE LOCATION:

Addresses: Near 11198 Beach Mill Road (Node 3), Near 10903 Beach Mill Road (Node 4), 9600 Beach Mill Road (Node 11)
Zoning District: RE (Nodes 3, 4, 11)
Use: VDOT Right-of-Ways
Supervisor District: Dranesville

DESCRIPTION OF PROPOSED USE:

Newpath is a carrier-neutral provider of wireless distributed antenna systems (DAS). Instead of using one tall antenna support structure, such as a tower, to provide wireless coverage to a several-mile radius, a DAS uses numerous existing structures, typically telephone poles, to provide service within a targeted area. Newpath designs its systems so that multiple providers can share the same antennas. AT&T will be the second WSP to use these particular nodes (Sprint-Nextel was the first), but other wireless telecommunications providers will be able to share the newly proposed antennas. The DAS also includes pole-mounted equipment cabinets, aerial fiber optic cable, and a "hub" radio equipment cabinet.

For these nodes, Newpath will be modifying three (3) existing Sprint-Nextel node locations which are currently located on existing utility poles owned by Dominion Virginia Electric Power Company ("Dominion"). Fiber optic cable will be strung from the poles and will be connected to the existing hub located within an existing tower compound located at the Great Falls Volunteer Fire Department located at 9916 Georgetown Pike in Great Falls, VA. This hub location was approved under 2232-D09-2 (the "hub"). The fiber optic cable will be strung alongside the other cable lines strung on the poles.

As these existing Dominion utility poles are already approved for and in use as existing DAS nodes for Sprint-Nextel (see 2232-D05-14 and 2232A-D05-14-1), the poles will not be replaced, and the current pole heights and diameters will remain the same.

The proposed modification with include three panel antennas to be mounted on top of the existing poles but beneath the existing Sprint-Nextel omni whip antennas. A cylindrical sheath, painted to match the existing poles, will cover the new panel antennas. Each antenna is 23" x 10.3" x 5.5". The cap is 28" in diameter x 6' high, as shown on the zoning drawings. The cap adds an additional six feet to the height of each pole. An equipment box, for the use of AT&T and Sprint-Nextel, with dimensions 44" x 31" x 10", will be installed on each pole replacing the current equipment box. The new cabinet is designed to be shared by multiple carriers.

The fiber optic cable will connect to the hub.

The facility will operate automatically and will not require personnel or hours of attendance. It will operate twenty-four (24) hours a day, three hundred and sixty-five days a year. Maintenance personnel will visit the site periodically and occasionally for repairs or modifications to the facility.

REQUIREMENT FOR PROPOSED USE:

Telecommunications carriers must locate antenna sites according to a network design within relatively limited geographic parameters in order to provide uninterrupted coverage. When carriers cannot locate a site within these geographic parameters, network users will pass through an area where the lost signal results in interrupted or "dropped" calls. In addition, an incomplete system is not consistent with AT&T's legal requirements to provide continuous coverage and to provide coverage to a percentage of the population within specific time parameters as required by its FCC license.

The coverage areas for the three (3) nodes are shown on the propagation maps. AT&T's primary objective for the entire Great Falls systems is to provide coverage on River Bend Rd (from Beach Mill Rd to Georgetown Pike), Georgetown Pike (from River Bend Road to I-495) and portions of Old Dominion Rd (from Georgetown Pike to I-495) and surrounding residential communities. The first phase of the DAS provided coverage along Georgetown Pike, as approved under application 2232-D07-13.

A DAS is the ideal way to meet wireless coverage objectives in the Great Falls area while protecting its scenic and historic character.

.

ANTICIPATED IMPACTS ON ADJOINING PROPERTIES

The proposed facility will have no impact as to traffic, light, pollution, air quality, water quality, or radiation on the adjoining properties. As stated previously, this proposal is a simple modification of three existing DAS nodes so that there will be minimal additional visual impact on surrounding properties. To accommodate AT&T's needs, additional vertical structures will not be built in the area for the purpose of telecommunications. The DAS will have the positive impact of enabling motorists and residents within the reach of the signal to be served by wireless telecommunication.

RELATIONSHIP OF THE PROPOSAL TO THE COMPREHENSIVE PLAN

The proposed facility is consistent with and furthers the transcendent goals of the Fairfax County Comprehensive Land Use Plan ("Plan") as well as the applicable objectives. DAS is recommended in the Policy Plan of the Fairfax County Comprehensive Plan (Public Facilities/Mobile & Land-based Telecommunication

Services) as the most appropriate solution for wireless communications in residential and other visually-sensitive areas.

The location, character and extent of the application should be found to be in substantial accord with the Comprehensive Plan. In terms of location, the nodes are within the public right-of-way. In terms of character, the system makes use of the existing infrastructure of poles. In terms of extent, the installations are designed to be as minimally intrusive as possible due to a stealth design of shared antennas. While the pole height will be increased, no additional vertical elements will be added to the landscape. The proposed facility poses no encroachment on any existing easements or services, and the antenna mounting heights are the minimum needed to serve the facility's goals for the applicant. No equipment will be placed on the ground.

The instant application is also consistent with the objectives found under the Policy Plan of the Comprehensive Plan concerning "Mobile and Land-Based Telecommunication Services."

Under the "General Guidelines" section, it states:

Objective 42: In order to provide for the multiple and land-based telecommunication network for wireless telecommunication systems licensed by the Federal Communications Commission, and in order to achieve opportunities for the collocation of related facilities and the reduction of their visual impact, locate the network's necessary support facilities which include antennas, monopoles, lattice towers and equipment building in accordance with the following policies:

Policy a. ***Avoid construction of new structures by locating mobile and land-based telecommunication facilities on available existing structures such as building rooftops, telecommunication and broadcast poles and towers, electrical utility poles and towers, and water storage facilities when the telecommunications facilities can be placed inconspicuously to blend with such existing structure.***

By utilizing the existing infrastructure of network utility distribution poles, Applicants have avoided the construction of a new telecommunications monopole or tower, and thus furthered this objective of the Comprehensive Plan. The Comprehensive Plan did not anticipate that utility companies require the vertical separation required by VDOT and utility companies to meet the NESC requirements. The system does not add vertical structures; while poles will need to be replaced, the system utilizes an existing network.

Policy h. ***Design, site and/or landscape mobile and land-based telecommunication facilities to minimize impacts on the character of the property and surrounding area. Demonstrate the appropriateness of the design***

through facility schematics and plans which detail the type, location, height, and material of the proposed structures and their relationship to other structures on the property and surrounding area.

Newpath ,AT&T and Sprint-Nextel would submit that the design chosen for this particular installation, namely a cap mounted antenna and equipment cabinets placed directly on the replacement utility distribution poles in question, effectively minimizes the impact on the surrounding residential area. This is demonstrated in the zoning drawings. Additional vertical elements are not being added. Because of extensive vegetation in the area, the extra height of the replacement poles will not have a significant visual impact. Due to the clearance requirements of VDOT, the poles would be replaced over time.

Policy k. ***Locate telecommunication facilities to ensure the protection of historically significant landscapes. The views of and vistas from architecturally and/or historically significant structures should not be impaired or diminished by the placement of telecommunication facilities.***

Due to the minimal height of the replacement poles, there will be no significant effect on historically significant landscapes. These landscapes are protected by avoiding the installation of another tower.

Policy l. ***Site proposed facilities to avoid areas of environmental sensitivity.***

(See description of compliance with Policy k.)

Objective 43: Design telecommunication facilities to mitigate their visual presence and prominence, particularly when located in residential areas, by concealing their intended purpose in a way that is consistent with the character of the surrounding area:

Policy c. ***Use appropriately other new and existing structures and vegetation of comparable form and style to establish a grouping that complements a camouflaged telecommunication facility and supports its design, location and appearance.***

Newpath will submit that design chosen satisfies this equipment.

ALTERNATIVE SITES CONSIDERED FOR THIS PROPOSAL

As these three (3) locations are currently existing DAS nodes that are simply proposed for modification to add a second tenant, and not proposed new DAS node locations, Newpath did not consider alternatives.

The applicants, Newpath Networks, Inc., AT&T and Sprint-Nextel respectfully submit to the Planning Commission that the proposed facility is consistent with the Comprehensive Plan as to character, location and extent.

Please contact me at 443-992-3450 (**gtully@nbcllc.com**) if you have any questions with reference to this submission.

Sincerely,

Gregory S. Tully
Network Building & Consulting, LLC
Consultant for Newpath Networks, Inc.

Newpath Networks LLC – Nodes 3, 4 and 11 Details Table – Revised 8-29-11

Pole #	Address	Tax Map Number	Pole Owner	Existing S-N Node Height, Diameter	Total New Node Height (With New Antennas), Diameter	ROW Width	Coordinates
Pole #BH73 (Node 3)	Near 11198 Beach Mill Road	Near 0033-01-0018B	Dominion	57'-8", 18"	60'-6", 18"	79.7'	39-01-50.558, -77-19-47.837
Pole #GG68 (Node 4)	Near 10903 Beach Mill Road	Near 0033-01-0027	Dominion	56'-7", 18"	59'-6",18"	38.3'	39-01-48.635, -77-19-16.270
Pole #HB81 (Node 11)	Near 9600 Beach Mill Road	Near 0081-01-0013G	Dominion	52', 2",18"	54'-11",18"	76.9'	39-01-21.307, -77-16-37.932

THE INFORMATION CONTAINED IN THIS DRAWING IS THE SOLE PROPERTY OF ELECTRO MECHANICAL INDUSTRIES, INC. ANY REPRODUCTION IN PART OR WHOLE WITHOUT THE WRITTEN PERMISSION OF ELECTRO MECHANICAL IND., INC. IS PROHIBITED.

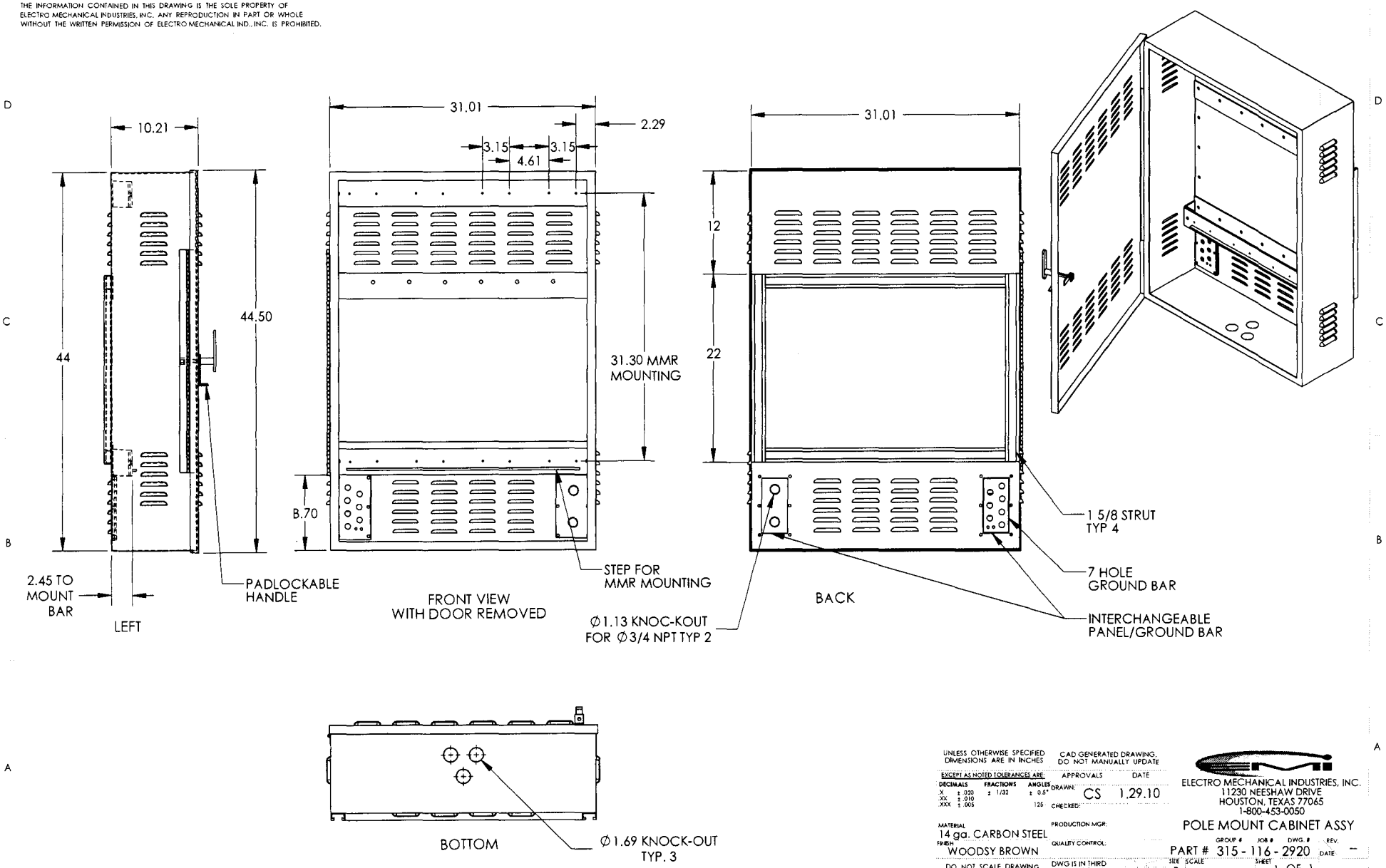

UNLESS OTHERWISE SPECIFIED DIMENSIONS ARE IN INCHES

EXCEPT AS NOTED TOLERANCES ARE:

DECIMALS	FRACTIONS	ANGLES
.X ± .020	± 1/32	± 0.5°
.XX ± .010		
.XXX ± .005		125

MATERIAL: 14 ga. CARBON STEEL

FINISH: WOODSY BROWN

DO NOT SCALE DRAWING

CAD GENERATED DRAWING. DO NOT MANUALLY UPDATE

APPROVALS		DATE
DRAWN:	CS	1.29.10
CHECKED:		
PRODUCTION MGR:		
QUALITY CONTROL:		

DWG IS IN THIRD ANGLE PROJECTION

ELECTRO MECHANICAL INDUSTRIES, INC.
11230 NEESHAW DRIVE
HOUSTON, TEXAS 77065
1-800-453-0050

POLE MOUNT CABINET ASSY

GROUP #	JOB #	DWG. #	REV.
		PART # 315 - 116 - 2920	--

SIZE B | SCALE -- | SHEET 1 OF 1 | DATE --

KATHREIN
SCALA DIVISION

742-222

65° Multiband Directional Antenna with Integrated Combiner

Kathrein's dual band antennas are ready for 3G applications, covering all existing wireless bands as well as all spectrum under consideration for future systems, AMPS, PCS and 3G/UMTS. These cross-polarized antennas offer diversity operation in the same space as a conventional 800 MHz antenna, and are mountable on our compact sector brackets

- Wide band operation.
- Exceptional intermodulation characteristics.
- Various gain, beamwidth and downtilt ranges.
- High strength pultruded fiberglass radome.
- Integrated combiner reduces RF feedline requirements from 4 to 2.

806–960 MHz

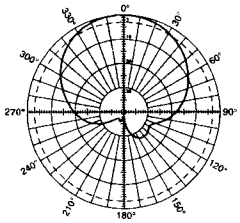

Horizontal pattern
±45°-polarization

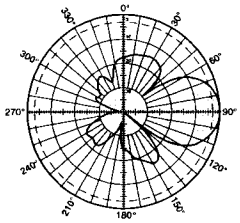

Vertical pattern
±45°-polarization

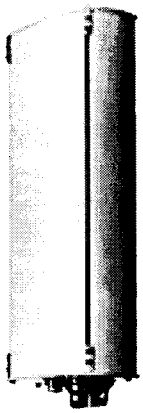

1710–2170 MHz

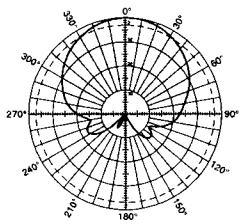

Horizontal pattern
±45°-polarization

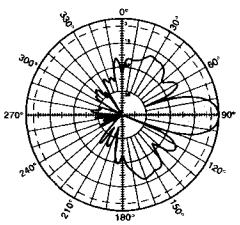

Vertical pattern
±45°-polarization

General specifications:

Frequency range	806–960 MHz 1710–2170 MHz
Impedance	50 ohms
VSWR	<1.5:1
Intermodulation (2x20w)	IM3: -150 dBc
Polarization	+45° and -45°
Connector	2 x 7/16 DIN female
Isolation intrasystem	>30 dB
Weight	15.9 lb (7.2 kg)
Dimensions	22.8 x 10.3 x 5.5 inches (579 x 262 x 139 mm)
Equivalent flat plate area	1.93 ft² (0.179 m²)
Wind survival rating*	120 mph (200 kph)
Shipping dimensions	28.4 x 11.9 x 7.6 inches (721 x 302 x 192 mm)
Shipping weight	19.2 lb (8.7 kg)
Mounting	Fixed and tilt mount options are available for 2 to 4.6 inch (50 to 115 mm) OD masts.

See reverse for order information.

Specifications:	**806–866 MHz**	**824–894 MHz**	**880–960 MHz**	**1710–1880 MHz**	**1850–1990 MHz**	**1920–2170 MHz**
Gain	9.1 dBd/11.1 dBi	9.4 dBd/11.4 dBi	9.8 dBd/11.8 dBi	10.5 dBd/12.5 dBi	11.3 dBd/13.3 dBi	11.6 dBd/13.6 dBi
Front-to-back ratio (180° ± 30°)	>23 dB (co-polar) >20 dB (total power)	>23 dB (co-polar) >20 dB (total power)	>25 dB (co-polar) >22 dB (total power)	>25 dB (co-polar) >22 dB (total power)	>25 dB (co-polar) >22 dB (total power)	>25 dB (co-polar) >22 dB (total power)
Maximum input power	250 watts (at 50°C)	250 watts (at 50°C)	250 watts (at 50°C)	200 watts (at 50°C)	200 watts (at 50°C)	200 watts (at 50°C)
+45° and -45° polarization horizontal beamwidth	67° (half-power)	66° (half-power)	64° (half-power)	66° (half-power)	60° (half-power)	60° (half-power)
+45° and -45° polarization vertical beamwidth	34° (half-power)	33° (half-power)	30° (half-power)	20° (half-power)	18° (half-power)	17.5° (half-power)
Cross polar ratio Main direction 0° Sector ±60°	 25 dB (typical) >10 dB	 25 dB (typical) >10 dB	 25 dB (typical) >10 dB	 18 dB (typical) >10 dB	 18 dB (typical) >10 dB	 20 dB (typical) >10 dB

*Mechanical design is based on environmental conditions as stipulated in EIA-222-F (June 1996) and/or ETS 300 019-1-4 which include the static mechanical load imposed on an antenna by wind at maximum velocity. See the Engineering Section of the catalog for further details.

10823-B
936.2478

Kathrein Inc., Scala Division Post Office Box 4580 Medford, OR 97501 (USA) Phone: (541) 779-6500 Fax: (541) 779-3991
Email: communications@kathrein.com Internet: www.kathrein-scala.com

KATHREIN
SCALA DIVISION

742-222

65° Multiband Directional Antenna with Integrated Combiner

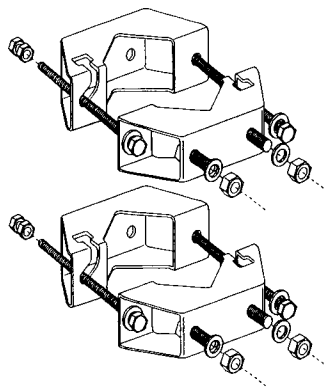

AMB-7 Mounting Kit

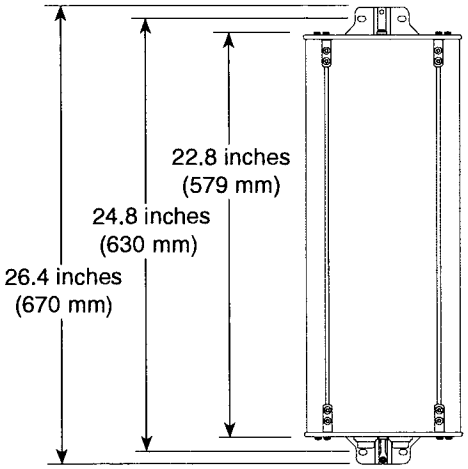

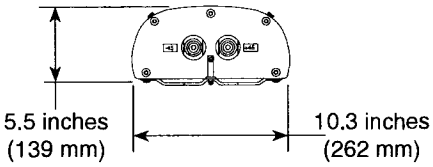

Mounting Options:

Model Description	
AMB-7 (shown) 2 x 738-546	Mounting Kit for 2 to 4.6 inch (50 to 115 mm) OD mast.
ASB-3 742-033	Three-panel Sector Mounting Kit (120 deg. ea.) for 4.5 inch (114.3 mm mm) OD steel mast.
ASB-5 742-034	Three-panel Sector Mounting Kit (120 deg. ea.) for 5.5 inch (139.7 mm) OD mast.
737-978	Tilt Mount Kit 0–30 degrees downtilt angle.

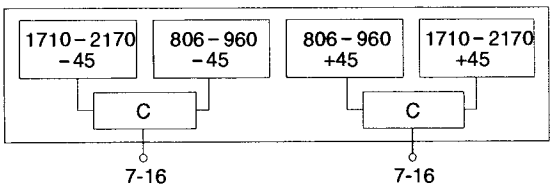

Order Information:

Model	Description
742-222	Antenna with 7/16 DIN connectors

All specifications are subject to change without notice

Kathrein Inc., Scala Division Post Office Box 4580 Medford, OR 97501 (USA) Phone: (541) 779-6500 Fax: (541) 779-3991
Email: communications@kathrein.com Internet: www.kathrein-scala.com

Coverage without Nodes 3 & 4

Coverage with Nodes 3 & 4

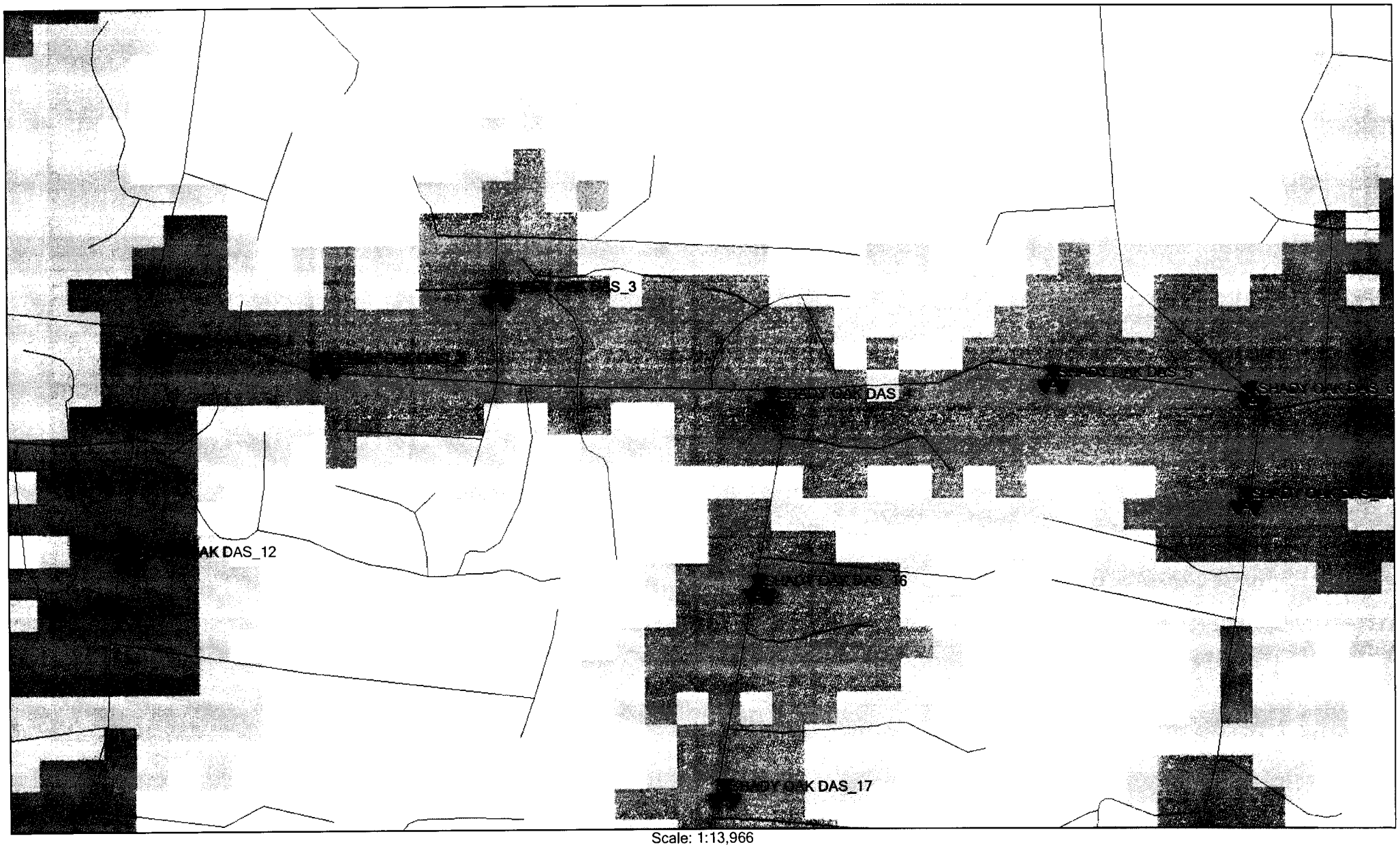

Scale: 1:13,966

0 0.2 0.4miles

Coverage without Node 11

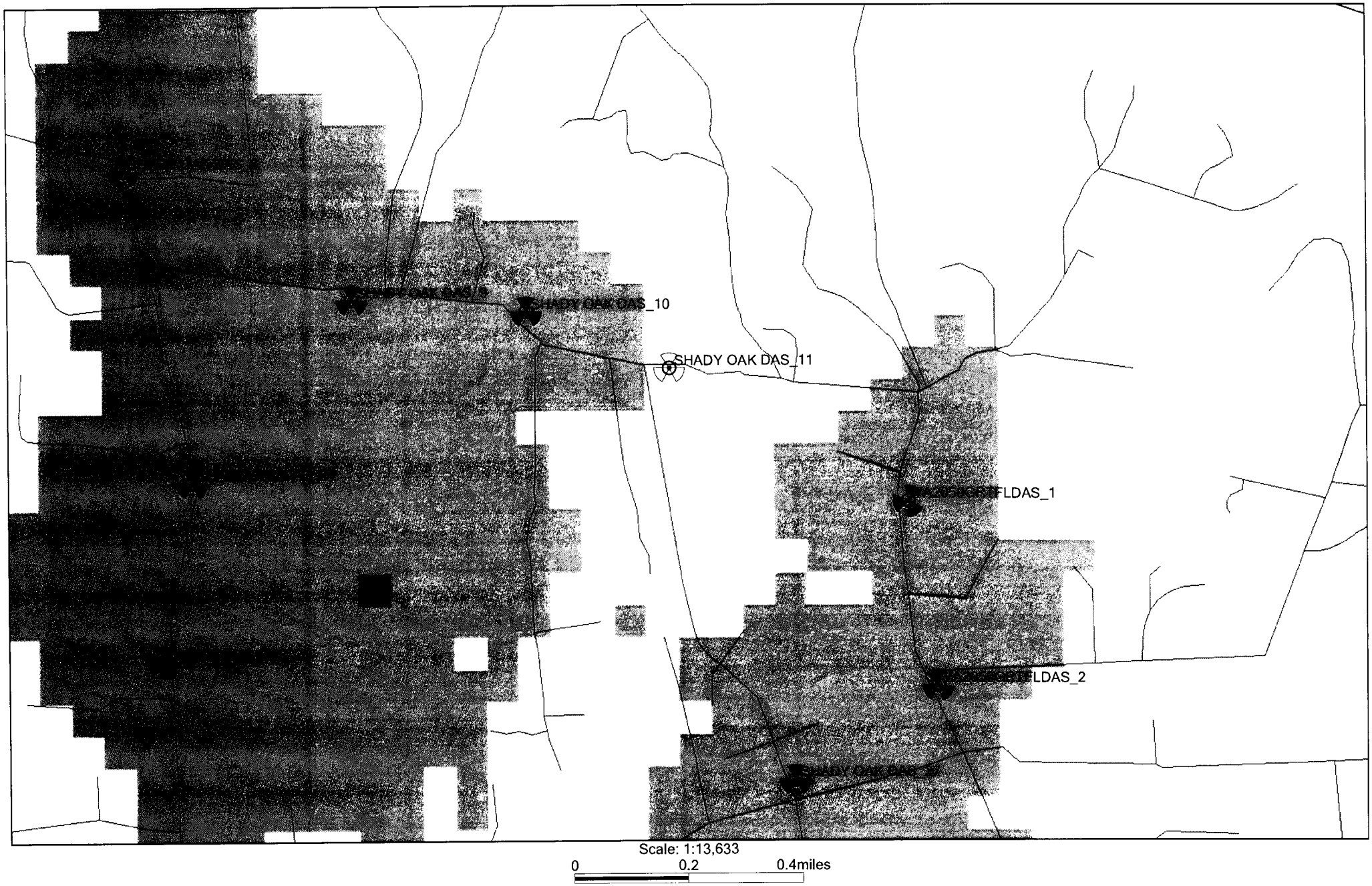

Scale: 1:13,633

0 0.2 0.4miles

Coverage with Node 11

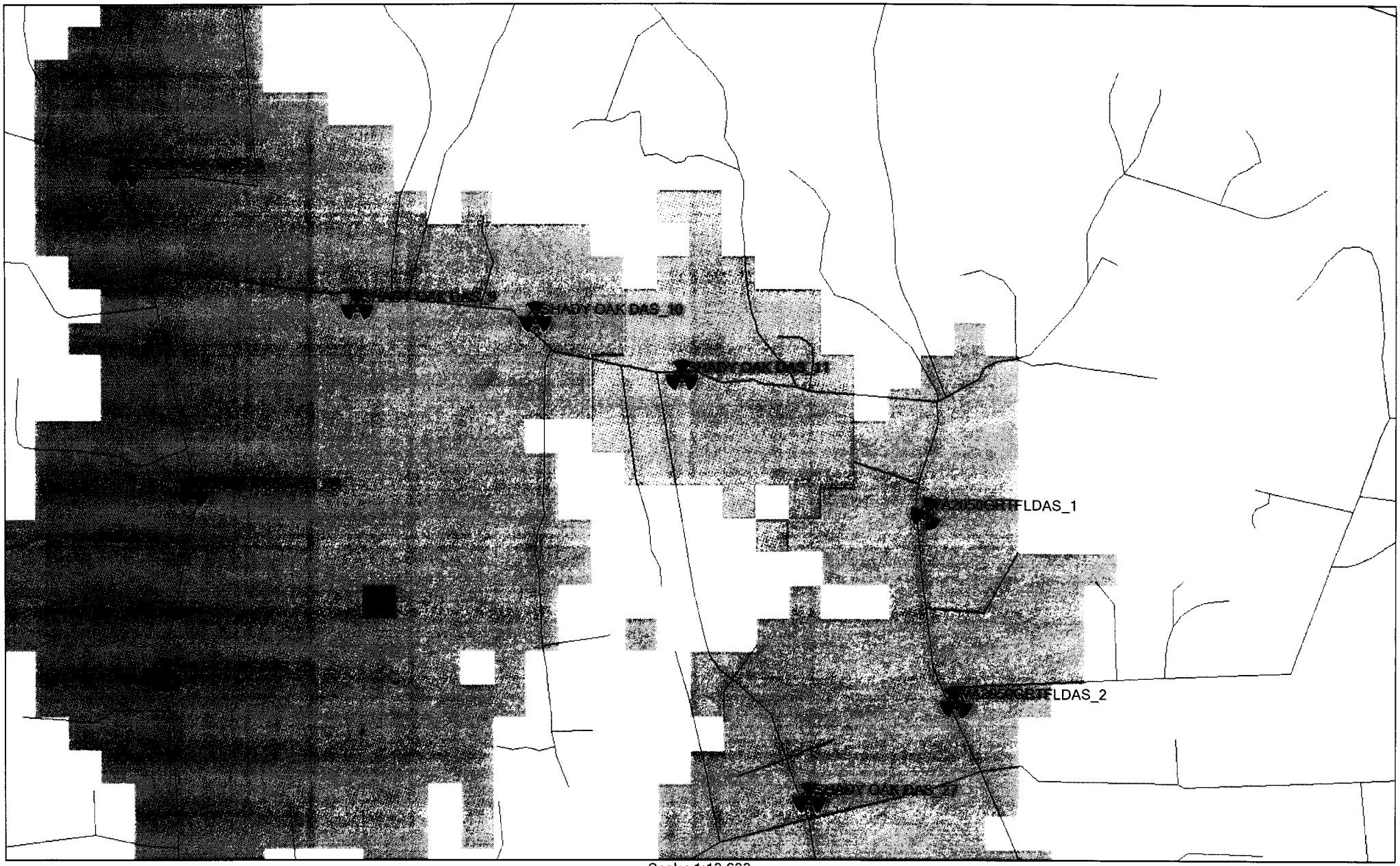

Scale: 1:13,633

0 0.2 0.4miles

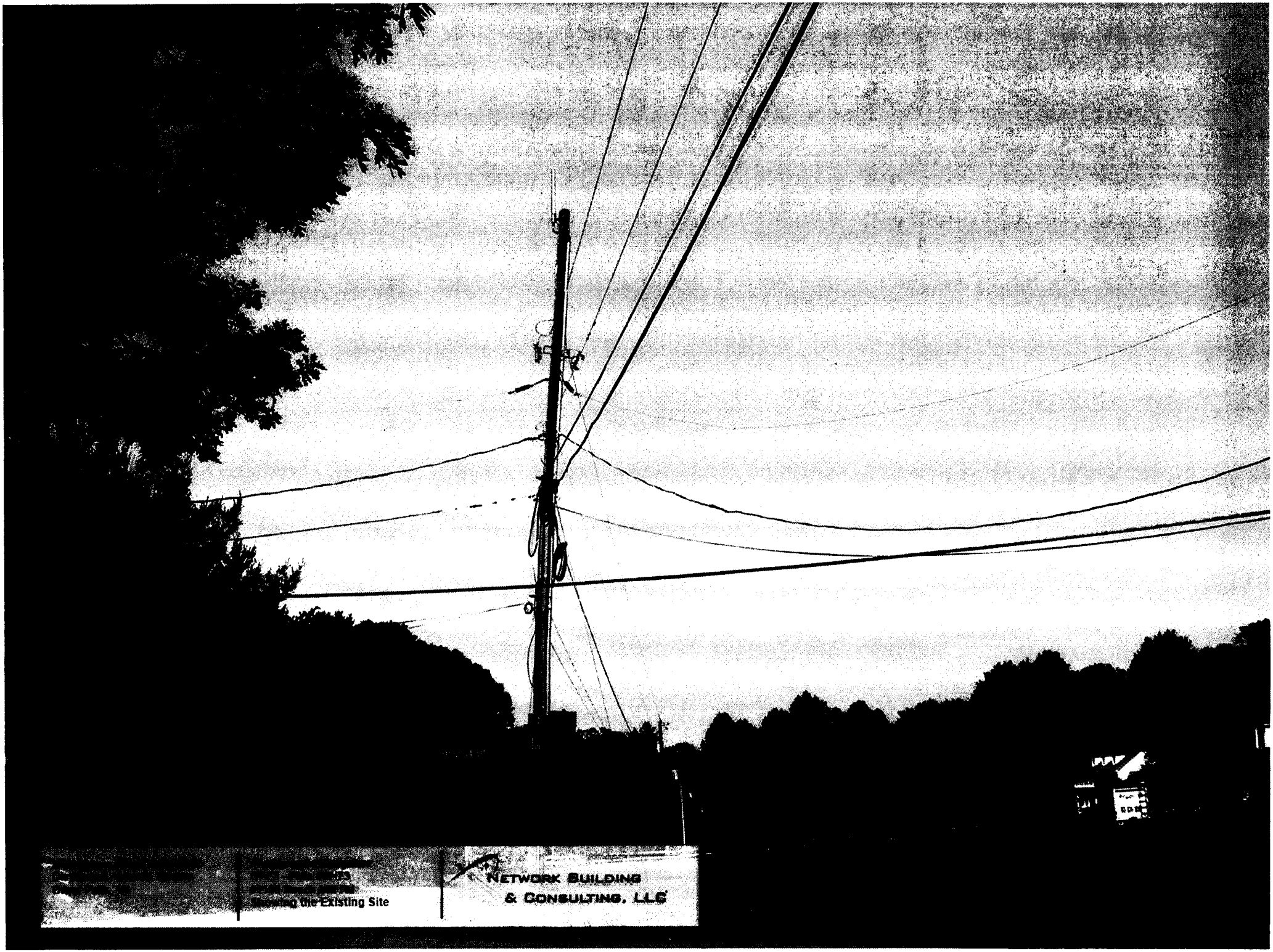

Showing the Existing Site

NETWORK BUILDING
& CONSULTING, LLC

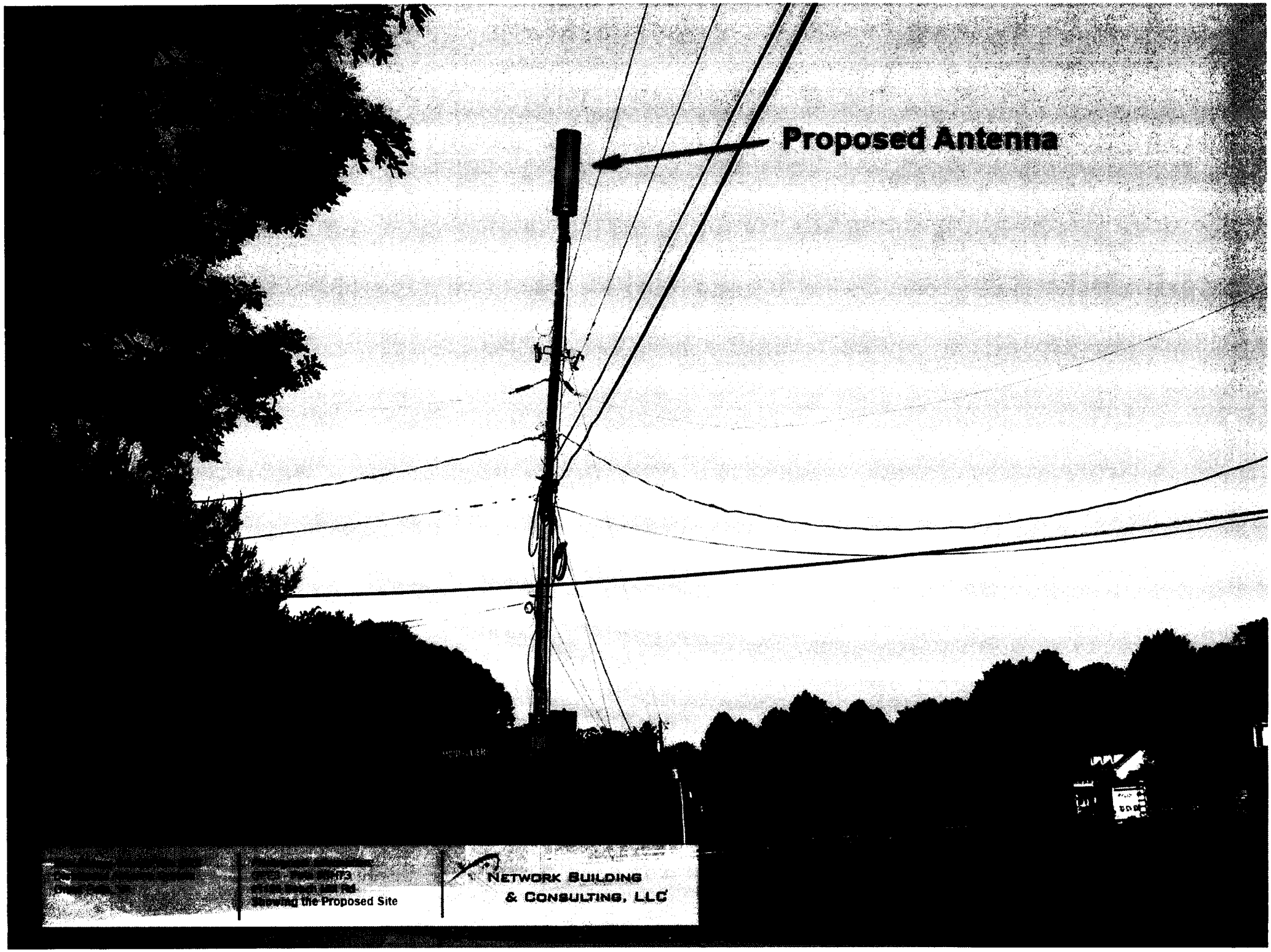

Showing the Proposed Site

NETWORK BUILDING
& CONSULTING, LLC

Showing the Existing Site
NETWORK BUILDING
& CONSULTING, LLC

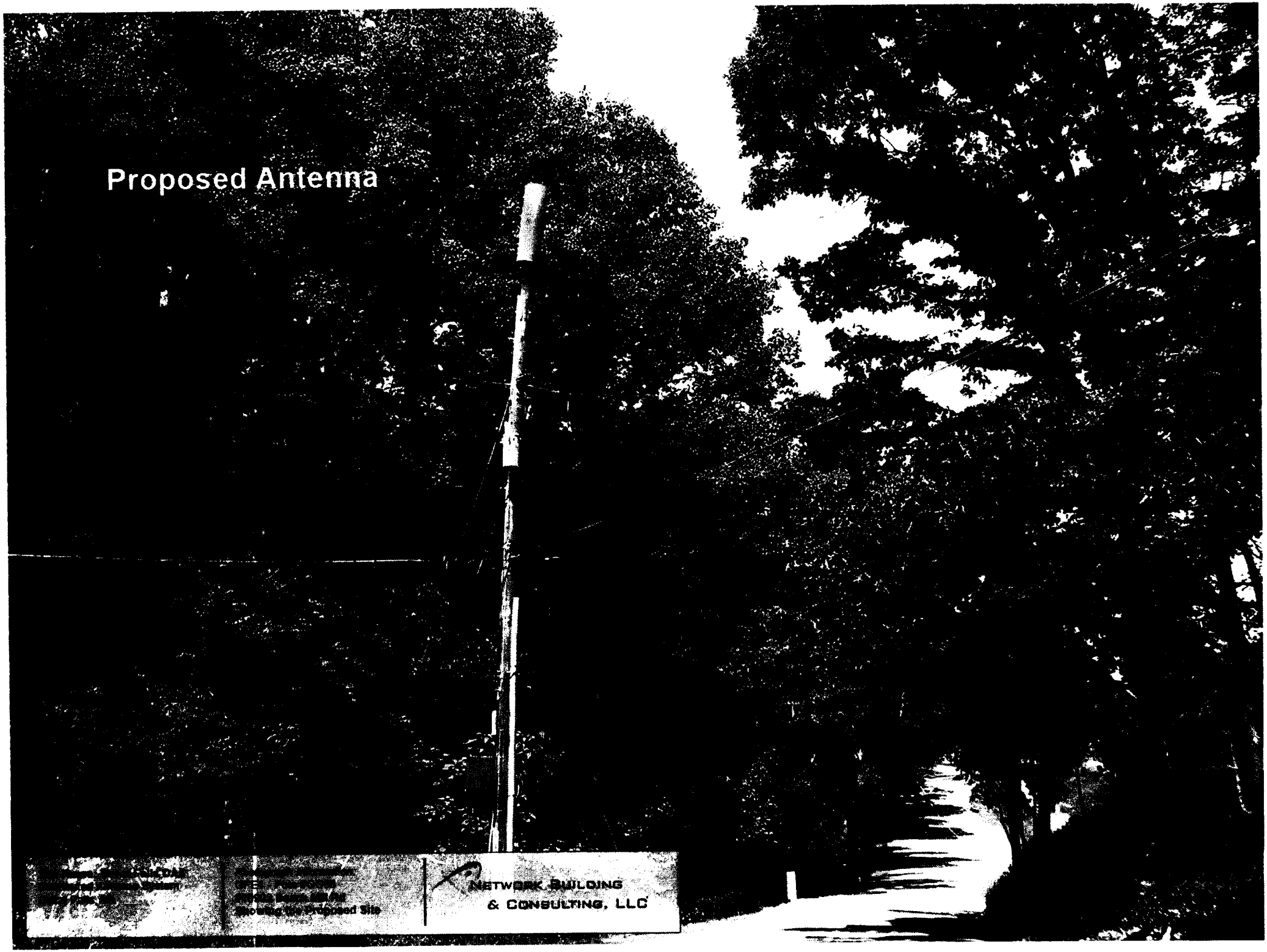
Proposed Antenna
NETWORK BUILDING
& CONSULTING, LLC

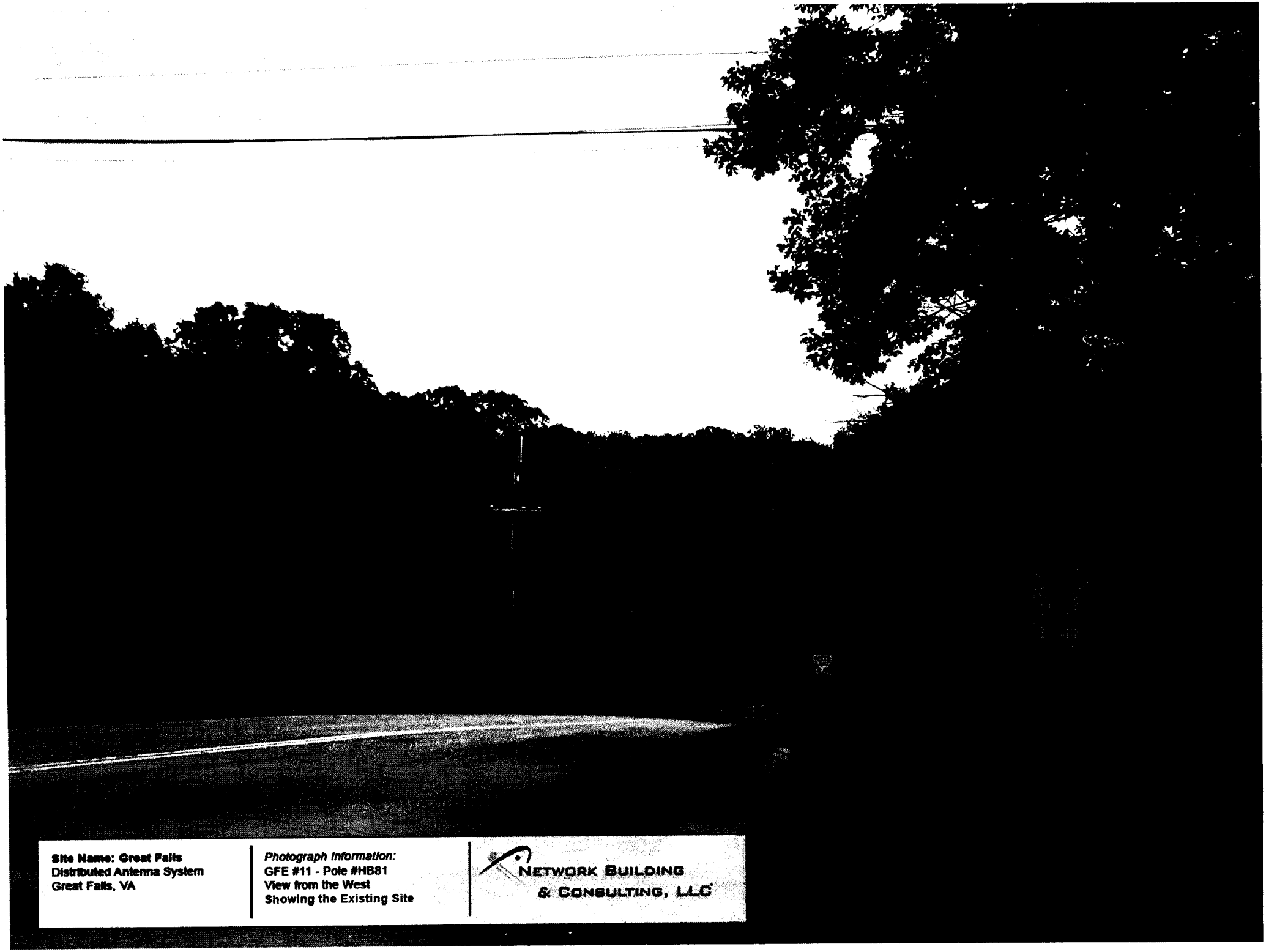

Site Name: Great Falls
Distributed Antenna System
Great Falls, VA

Photograph Information:
GFE #11 - Pole #HB81
View from the West
Showing the Existing Site

NETWORK BUILDING
& CONSULTING, LLC

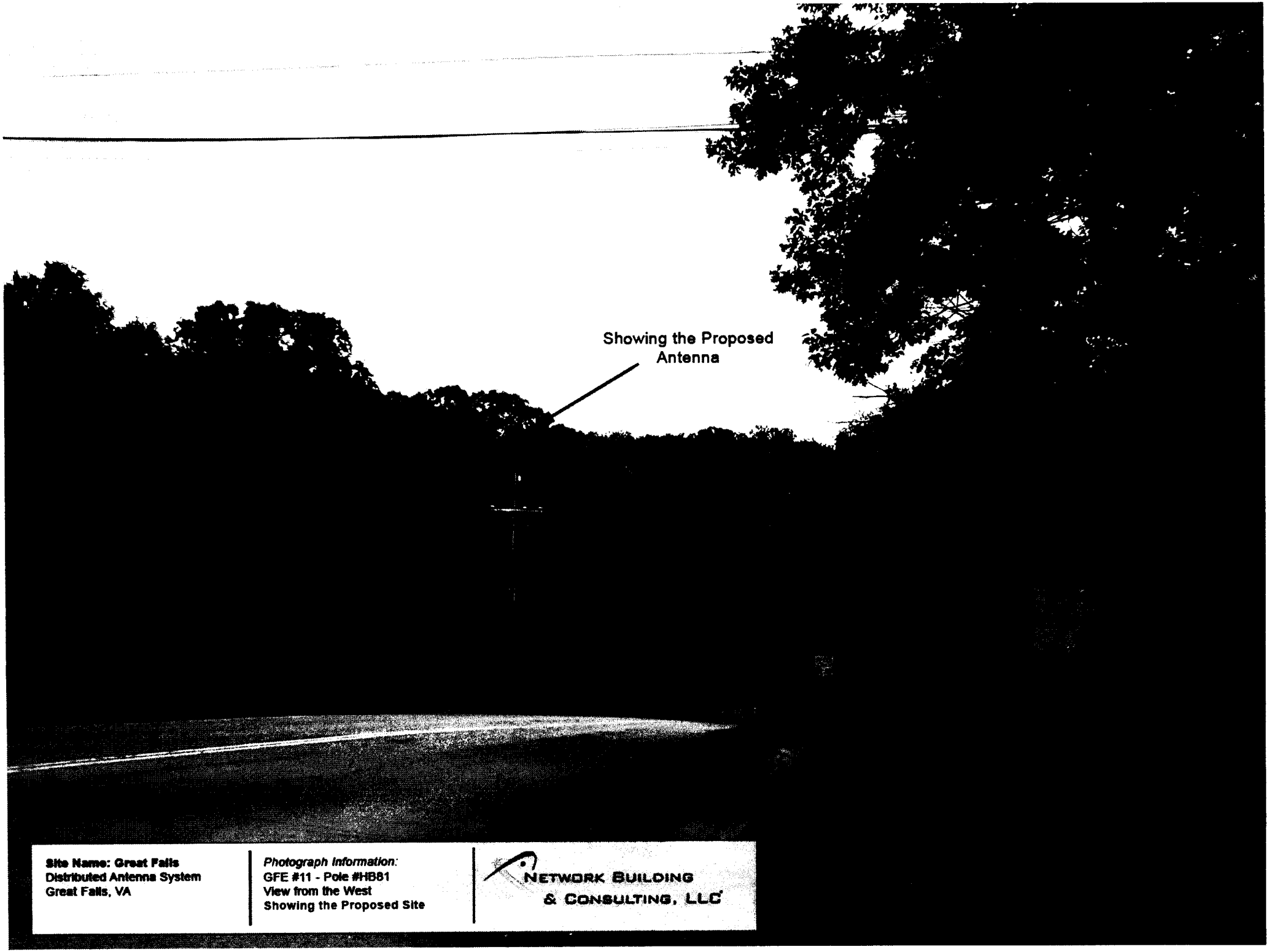

Site Name: Great Falls
Distributed Antenna System
Great Falls, VA

Photograph Information:
GFE #11 - Pole #HB81
View from the West
Showing the Proposed Site

NETWORK BUILDING
& CONSULTING, LLC

NODES 3, 4 & 11
GREAT FALLS DAS PHASE 2
GREAT FALLS, VIRGINIA

2232 REVIEW

newpath NETWORKS

entrex communication services, inc.
1575 Eye Street, N.W. Suite 350
WASHINGTON, D.C. 20005
PHONE: (202)408-0960
FAX: (202)408-0961

SUBMITTALS

DATE	DESCRIPTION	REV.
08-04-10	NEW NODES 12A,17A & 27A	0
08-11-10	STAFF REVIEW COMMENTS	1
12-10-10	REMOVE SPRINT ANTENNA	2
04-29-11	FOUND PROPERTY MARKER	3
06-31-11	ANTENNA CONF. & DETAILS	4

SEAL:

COMMONWEALTH OF VIRGINIA
CAMILLE SMASSONE
No. 0402
PROFESSIONAL ENGINEER

newpath NETWORKS
1300 N Northlake Way
Seattle, WA 98103
www.newpathnetworks.net

at&t
New Cingular Wireless PCS, LLC
By: AT&T Mobility Corporation
Its: Manager

PROJECT NO:	1002.483
DESIGNER:	J.D.S.
ENGINEER:	C.S.

SCALE: 0 1/2 1 GRAPHIC SCALE IN INCHES

NODES 3, 4 & 11
GREAT FALLS DAS
GREAT FALLS
VIRGINIA
2232 REVIEW

TITLE: **TITLE SHEET**

SHEET NUMBER: **T-1**

GENERAL NOTES

1. THE CONTRACTOR SHALL GIVE ALL NOTICES AND COMPLY WITH ALL LAWS, ORDINANCES, RULES, REGULATIONS AND LAWFUL ORDERS OF ANY PUBLIC AUTHORITY, MUNICIPAL AND UTILITY COMPANY SPECIFICATIONS, AND LOCAL AND STATE JURISDICTIONAL CODES BEARING ON THE PERFORMANCE OF THE WORK. THE WORK PERFORMED ON THE PROJECT AND THE MATERIALS INSTALLED SHALL BE IN STRICT ACCORDANCE WITH ALL APPLICABLE CODES, REGULATIONS AND ORDINANCES.
2. THE ARCHITECT/ENGINEER HAS MADE EVERY EFFORT TO SET FORTH IN THE CONSTRUCTION AND CONTRACT DOCUMENTS THE COMPLETE SCOPE OF WORK. THE CONTRACTOR BIDDING THE JOB IS NEVERTHELESS CAUTIONED THAT MINOR OMISSIONS OR ERRORS IN THE DRAWINGS AND OR SPECIFICATIONS SHALL NOT EXCUSE SAID CONTRACTOR FROM COMPLETING THE PROJECT AND IMPROVEMENTS IN ACCORDANCE WITH THE INTENT OF THESE DOCUMENTS.
3. THE CONTRACTOR OR BIDDER SHALL BEAR THE RESPONSIBILITY OF NOTIFYING (IN WRITING) THE CONSTRUCTION MANAGER OF ANY CONFLICTS, ERRORS, OR OMISSIONS PRIOR TO THE SUBMISSION OF CONTRACTOR'S PROPOSAL OR PERFORMANCE OF WORK. IN THE EVENT OF DISCREPANCIES THE CONTRACTOR SHALL PRICE THE MORE COSTLY OR EXTENSIVE WORK, UNLESS DIRECTED IN WRITING OTHERWISE.
4. THE SCOPE OF WORK SHALL INCLUDE FURNISHING ALL MATERIALS, EQUIPMENT, LABOR AND ALL OTHER MATERIALS AND LABOR DEEMED NECESSARY TO COMPLETE THE WORK/PROJECT AS DESCRIBED HEREIN.
5. THE CONTRACTOR SHALL VISIT THE JOB SITE PRIOR TO THE SUBMISSION OF BIDS OR PERFORMING WORK TO FAMILIARIZE HIMSELF WITH THE FIELD CONDITIONS AND TO VERIFY THAT THE PROJECT CAN BE CONSTRUCTED IN ACCORDANCE WITH THE CONTRACT DOCUMENTS.
6. THE CONTRACTOR SHALL OBTAIN AUTHORIZATION TO PROCEED WITH CONSTRUCTION PRIOR TO STARTING WORK ON ANY ITEM NOT CLEARLY DEFINED BY THE CONSTRUCTION DRAWING/CONTRACT DOCUMENTS.
7. THE CONTRACTOR SHALL INSTALL ALL EQUIPMENT AND MATERIALS ACCORDING TO THE MANUFACTURER'S/VENDOR'S SPECIFICATION UNLESS NOTED OTHERWISE OR WHERE LOCAL CODES OR ORDINANCES TAKE PRECEDENCE.
8. THE CONTRACTOR SHALL PROVIDE A FULL SET OF CONSTRUCTION DOCUMENTS AT THE SITE UPDATED WITH THE LATEST REVISIONS AND ADDENDA OR CLARIFICATIONS AVAILABLE FOR THE USE BY ALL PERSONNEL INVOLVED WITH THE PROJECT.
9. THE CONTRACTOR SHALL SUPERVISE AND DIRECT THE PROJECT DESCRIBED HEREIN. THE CONTRACTOR SHALL BE SOLELY RESPONSIBLE FOR ALL CONSTRUCTION MEANS, METHODS, TECHNIQUES, SEQUENCES AND PROCEDURES AND FOR COORDINATING ALL PORTIONS OF THE WORK UNDER THE CONTRACT.
10. THE CONTRACTOR SHALL BE RESPONSIBLE FOR OBTAINING ALL PERMITS AND INSPECTIONS WHICH MAY BE REQUIRED FOR THE BY THE ARCHITECT/ENGINEER, THE STATE, COUNTY OR LOCAL GOVERNMENT AUTHORITY.
11. THE CONTRACTOR SHALL MAKE NECESSARY PROVISIONS TO PROTECT EXISTING IMPROVEMENTS, EASEMENTS, PAVING, CURBING, ETC. DURING CONSTRUCTION. UPON COMPLETION OF WORK, THE CONTRACTOR SHALL REPAIR ANY DAMAGE THAT MAY HAVE OCCURED DUE TO CONSTRUCTION ON OR ABOUT THE PROPERTY.
12. THE CONTRACTOR SHALL KEEP THE GENERAL WORK AREA CLEAN AND HAZARD FREE DURING CONSTRUCTION AND DISPOSE OF ALL DIRT, DEBRIS, RUBBISH AND REMOVE EQUIPMENT NOT SPECIFIED AS REMAINING ON THE PROPERTY. PREMISES SHALL BE LEFT IN CLEAN CONDITION AND FREE FROM PAINT SPOTS, DUST, OR SMUDGES OF ANY NATURE.
13. THE CONTRACTOR SHALL COMPLY WITH ALL OSHA REQUIREMENTS AS THEY APPLY TO THIS PROJECT.
14. THE CONTRACTOR SHALL NOTIFY THE CONSTRUCTION MANAGER WHERE A CONFLICT OCCURS ON ANY OF THE CONTRACT DOCUMENTS. THE CONTRACTOR IS NOT TO ORDER MATERIAL OR CONSTRUCT ANY PORTION OF THE WORK THAT IS IN CONFLICT IS RESOLVED BY THE CONSTRUCTION MANAGER.
15. THE CONTRACTOR SHALL VERIFY ALL DIMENSIONS, ELEVATIONS, PROPERTY LINES, ETC. ON THE PROJECT.
16. OWNER/CONTRACTOR SHALL CONTACT "MISS UTILITY" AT 1 800 257 7777 MINIMUM 72 HOURS PRIOR TO THE START OF CONSTRUCTION FOR LOCATION OF EXISTING UNDERGROUND UTILITIES.
17. THIS PROJECT IS EXEMPT FROM THE ELECTRICAL ENERGY CERTIFICATION FORM PER ASHRAE SECTION 2.3(G) "EQUIPMENT AND PORTIONS OF BUILDING THAT USE ENERGY PRIMARILY TO PROVIDE FOR INDUSTRIAL, MANUFACTURING, OR COMMERCIAL PROCESSES."

SYMBOLS AND ABBREVIATIONS

ADJ	ADJUSTABLE	MAX	MAXIMUM
APPROX	APPROXIMATE	MECH	MECHANICAL
CAB	CABINET	MFR	MANUFACTURER
CLG	CEILING	MGB	MAIN GROUND BAR
CONC	CONCRETE	MIN	MINIMUM
CONT	CONTINUOUS	MTL	METAL
CJ	CONSTRUCTION JOINT	NIC	NOT IN CONTRACT
DIA	DIAMETER	NTS	NOT TO SCALE
DWG	DRAWING	OC	ON CENTER
EGB	EQUIPMENT GROUND BAR	OPP	OPPOSITE
EA	EACH	SF	SQUARE FOOT
ELEC	ELECTRICAL	SHT	SHEET
EL	ELEVATION	SIM	SIMILAR
EQ	EQUAL	SS	STAINLESS STEEL
EQMP	EQUIPMENT	STL	STEEL
(E)	EXISTING	TOC	TOP OF CONCRETE
EXT	EXTERIOR	TOM	TOP OF MASONRY
FF	FINISHED FLOOR	TYP	TYPICAL
GA	GAGE	VF	VERIFY IN FIELD
GALV	GALVANIZED	UON	UNLESS OTHERWISE NOTED
GB	GROUND BAR	WWF	WELDED WIRE FABRIC
GC	GENERAL CONTRACTOR	W/	WITH
GRND	GROUND	&	AND
LG	LONG	@	AT
LLH	LONG LEG HORIZONTAL		

◆ SPOT ELEVATION
℄ CENTERLINE
℘ PLATE
No. / SHT — DETAIL NUMBER / SHEET NUMBER
—G— GROUND WIRE
——— COAXIAL CABLE

SHEET INDEX

T-1 TITLE SHEET
C-3 GPE3 - DOMINION POLE #BH73 SITE PLAN & ELEVATIONS - NEAR 11100 BEACH MILL RD
C-4 GPE4 - DOMINION POLE #GG68 SITE PLAN & ELEVATIONS - NEAR 10903 BEACH MILL RD
C-11 GPE11 - DOMINION POLE #HB81 SITE PLAN & ELEVATIONS - NEAR 9600 BEACH MILL RD
S-1 ANTENNA LAYOUT PLAN, EQUIPMENT AND MOUNTING DETAILS

PROJECT DESCRIPTION

1. REPLACE UTILITY POLES AT 3 NODE LOCATIONS.
1. AT EACH NODE LOCATION, INSTALL ONE EQUIPMENT CABINET, AND THREE PANEL ANTENNAS INSIDE A CONCEALMENT ENCLOSURE.
3. PROVIDE NEW ELECTRICAL SERVICE FROM DEMARCATION POINT AT EACH NODE LOCATION

APPLICANT: NEWPATH NETWORKS
PO BOX 4187
ANNAPOLIS, MD 21403
(410) 280-0860

HUB LOCATION: 9915 GEORGETOWN PIKE
GREAT FALLS, VA 22066

APPLICANT: New Cingular Wireless PCS, LLC
By: AT&T Mobility Corporation
Its: Manager

JURISDICTION: FAIRFAX COUNTY

OWNER APPROVAL

OWNER REPRESENTATIVE _____ DATE _____

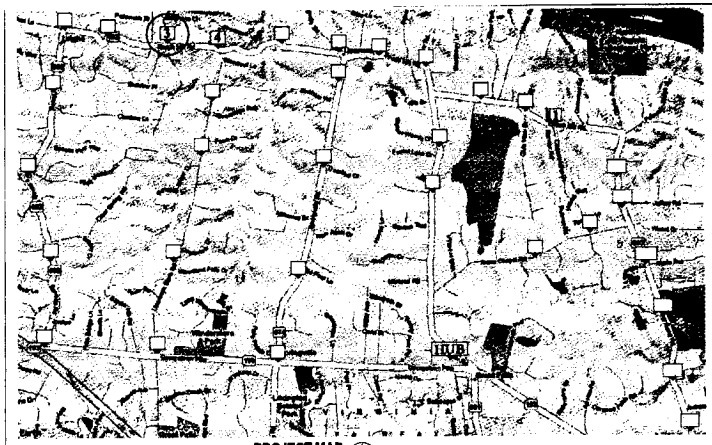

PROJECT MAP
SCALE: 1"=2000'-0"

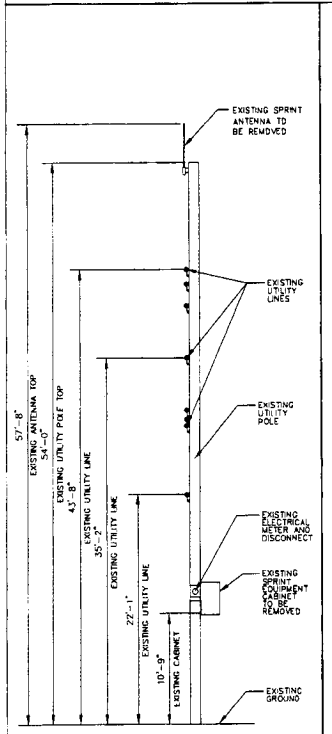

EXISTING POLE ELEVATION (3 / C-3)
SCALE: 3/16"=1'-0"

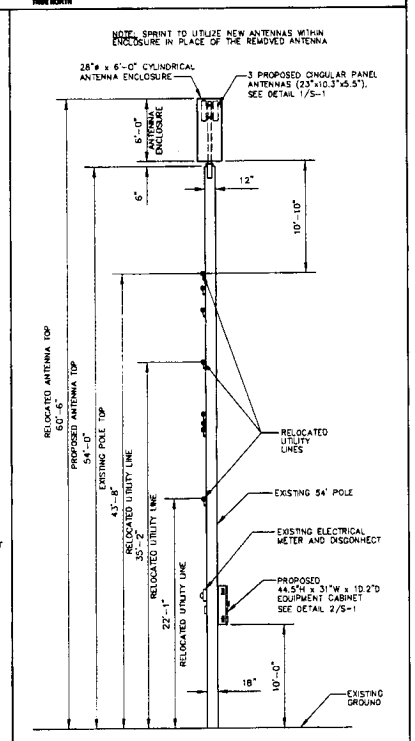

PROPOSED POLE ELEVATION (3 / C-3)
SCALE: 3/16"=1'-0"

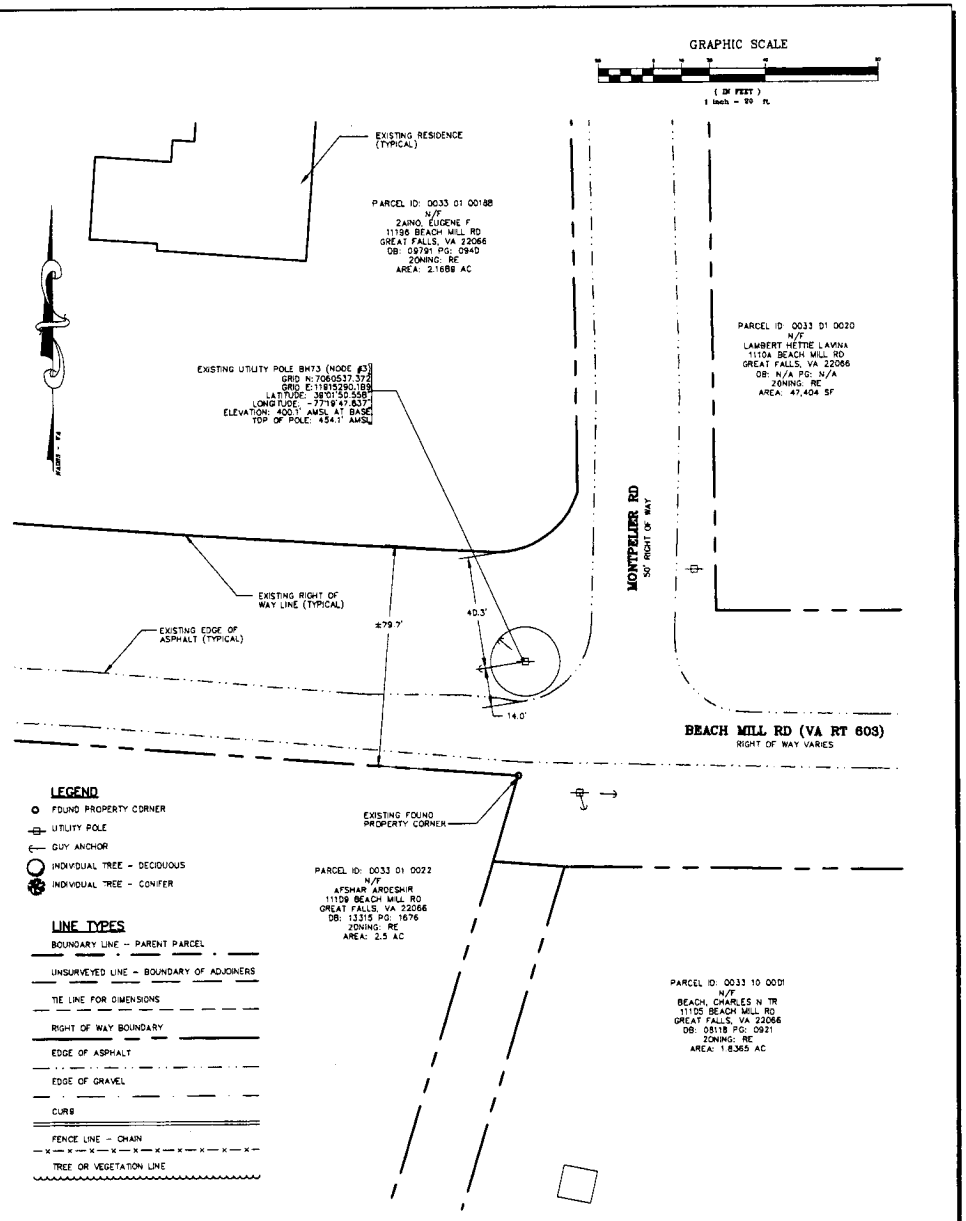

SITE PLAN (1 / C-3)
SCALE: 1"=20'-0"

entrex communication services, inc.
1575 Eye Street, N.W. Suite 350
WASHINGTON, D.C. 20005
PHONE: (202)408-0960
FAX: (202)408-0961

SUBMITTALS

DATE	DESCRIPTION	REV.
08-04-10	NEW NODES 12A,17A & 27A	0
08-11-10	STAFF REVIEW COMMENTS	1
12-10-10	REMOVE SPRINT ANTENNA	2
04-29-11	FOUND PROPERTY MARKER	3
08-31-11	ANTENNA CONF. & DETAILS	4

SEAL:

newpath NETWORKS
1300 N Northlake Way
Seattle, WA 98103
www.newpathnetworks.net

New Cingular Wireless PCS, LLC
By: AT&T Mobility Corporation
Its: Manager

PROJECT NO:	1002.483
DESIGNER:	R.S.
ENGINEER:	C.S.

SCALE:
0 1/2 1
GRAPHIC SCALE IN INCHES

NODES 3, 4 & 11
GREAT FALLS DAS
GREAT FALLS
VIRGINIA
2232 REVIEW

TITLE:
GFE3
POLE BH73 - SITE PLAN & ELEVATIONS
11198 BEACH MILL RD
GREAT FALLS, VA

SHEET NUMBER:
C-3

PROJECT MAP
SCALE: 1"=2000'-0"

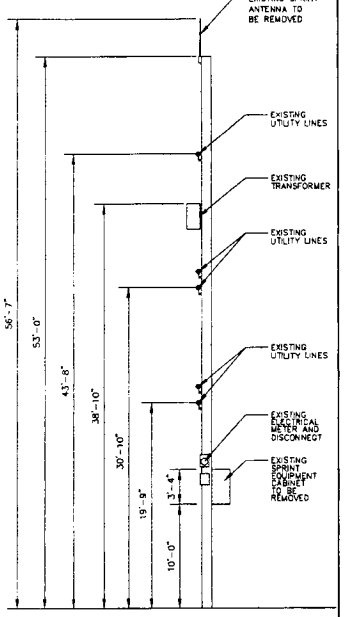

EXISTING POLE ELEVATION (2 / C-4)
SCALE: 3/16"=1'-0"

NOTE: SPRINT TO UTILIZE NEW ANTENNAS WITHIN ENCLOSURE IN PLACE OF THE REMOVED ANTENNA

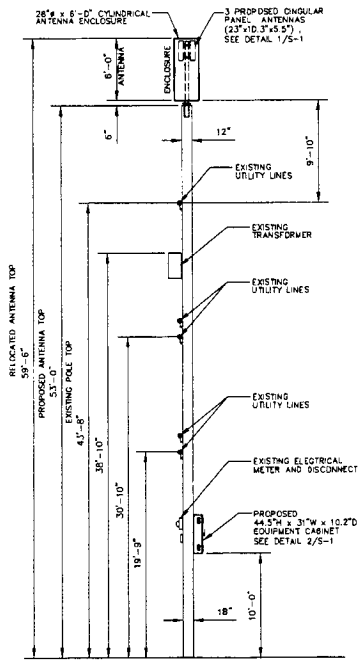

PROPOSED POLE ELEVATION (3 / C-4)
SCALE: 3/16"=1'-0"

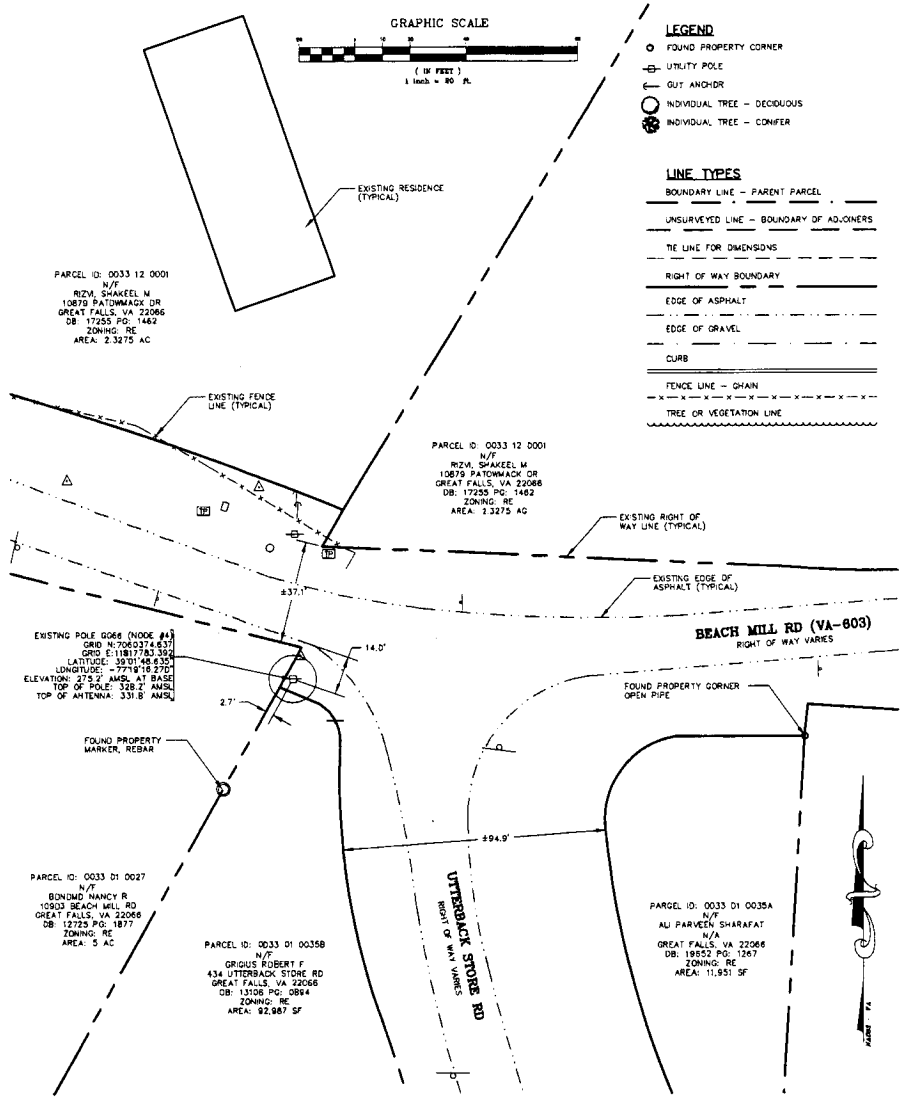

SITE PLAN (1 / C-4)
SCALE: 1"=20'-0"

entrex communication services, inc.
1575 Eye Street, N.W. Suite 350
WASHINGTON, D.C. 20005
PHONE: (202)408-8960
FAX: (202)408-0961

SUBMITTALS

DATE	DESCRIPTION	REV.
08-04-10	NEW NODES 12A,17A & 27A	0
08-11-10	STAFF REVIEW COMMENTS	1
12-10-10	REMOVE SPRINT ANTENNA	2
04-29-11	FOUND PROPERTY MARKER	3
08-31-11	ANTENNA CONF. & DETAILS	4

SEAL:

newpath NETWORKS
1300 N Northlake Way
Seattle, WA 98103
www.newpathnetworks.net
at&t
New Cingular Wireless PCS, LLC
By: AT&T Mobility Corporation
Its: Manager

PROJECT NO:	1002.483
DESIGNER:	R.S.
ENGINEER:	C.S.

SCALE: 0 1/2 1
GRAPHIC SCALE IN INCHES

NODES 3, 4 & 11
GREAT FALLS DAS
GREAT FALLS
VIRGINIA
2232 REVIEW

TITLE:
GFE4
POLE GG68 - SITE PLAN & ELEVATIONS
10903 BEACH MILL RD
GREAT FALLS, VA

SHEET NUMBER:
C-4

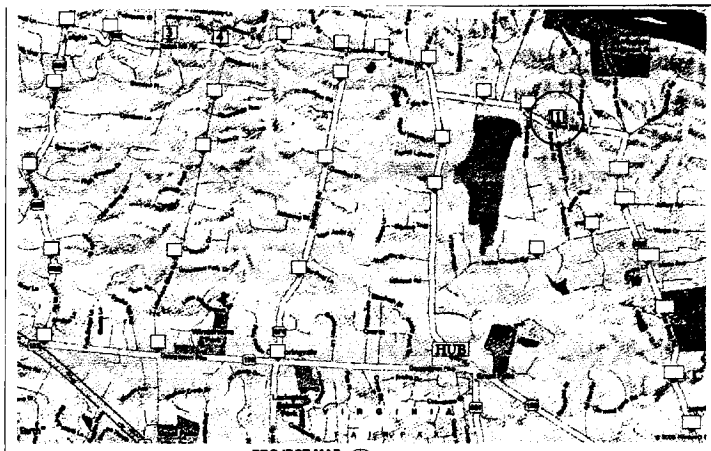

PROJECT MAP
SCALE: 1"=2000'-0"

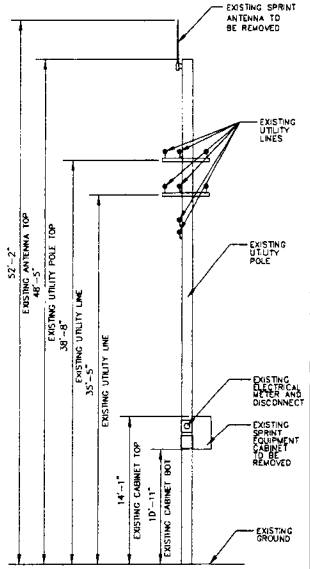

EXISTING POLE ELEVATION (2 / C-11)
SCALE: 3/16"=1'-0"

NOTE: SPRINT TO UTILIZE NEW ANTENNAS WITHIN ENCLOSURE IN PLACE OF THE REMOVED ANTENNA

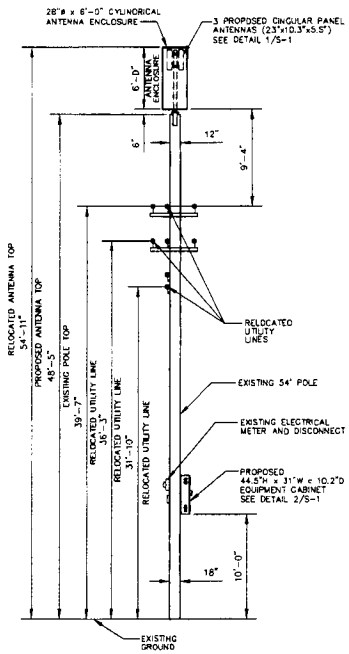

PROPOSED POLE ELEVATION (3 / C-11)
SCALE: 3/16"=1'-0"

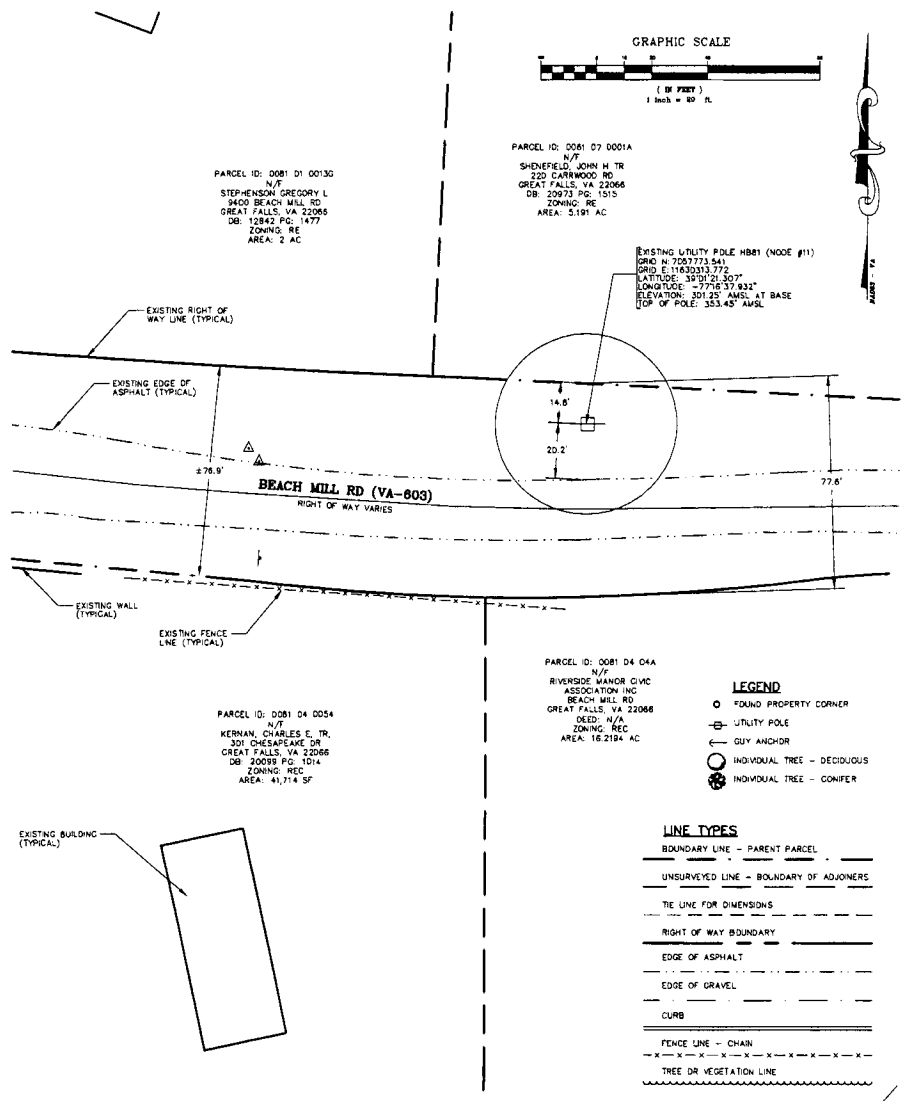

SITE PLAN (1 / C-11)
SCALE: 1"=20'-0"

entrex
communication services, inc.
1575 Eye Street, N.W. Suite 350
WASHINGTON, D.C. 20005
PHONE: (202)408-0960
FAX: (202)408-0961

SUBMITTALS

DATE	DESCRIPTION	REV.
08-04-10	NEW NODES 12A,17A & 27A	0
08-11-10	STAFF REVIEW COMMENTS	1
12-10-10	REMOVE SPRINT ANTENNA	2
04-29-11	FOUND PROPERTY MARKER	3
08-31-11	ANTENNA CONF. & DETAILS	4

SEAL:

newpath NETWORKS
1300 N Northlake Way
Seattle, WA 98103
www.newpathnetworks.net
at&t
New Cingular Wireless PCS, LLC
By: AT&T Mobility Corporation
Its: Manager

PROJECT NO:	1002.483
DESIGNER:	R.S.
ENGINEER:	C.S.

SCALE: 0 1/2 1 GRAPHIC SCALE IN INCHES

NODES 3, 4 & 11
GREAT FALLS DAS
GREAT FALLS
VIRGINIA
2232 REVIEW

TITLE:
GFE11
POLE HB81 - SITE PLAN & ELEVATIONS
9600 BEACH MILL RD
GREAT FALLS, VA

SHEET NUMBER:
C-11

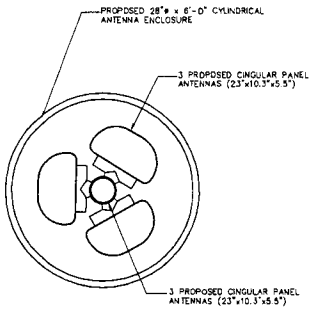

ANTENNA LAYOUT PLAN (1 / S-1)
SCALE: 1-1/2"=1'-0"

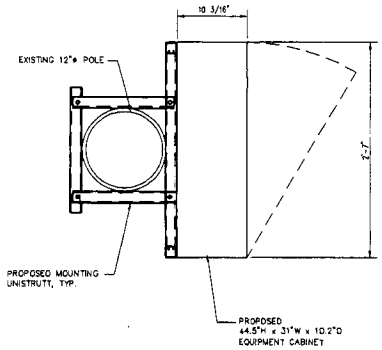

CABINET MOUNTING DETAIL (2 / S-1)
SCALE: 1-1/2"=1'-0"

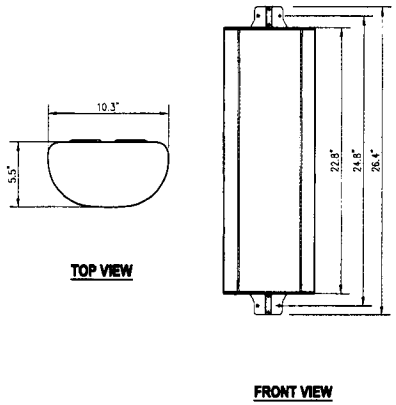

ANTENNA DETAIL (3 / S-1)
SCALE: N.T.S.

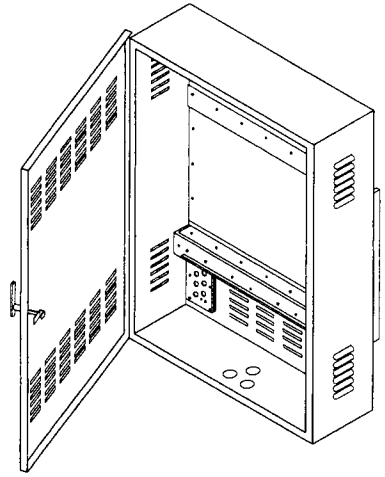

CABINET DETAIL- ISOMETRIC VIEW (4 / S-1)
SCALE: N.T.S.

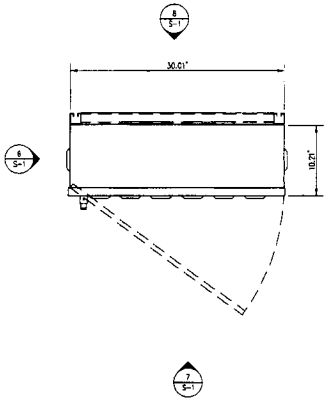

POLE MMOUNTED CABINET PLAN (5 / S-1)
SCALE: 1-1/2"=1'-0"

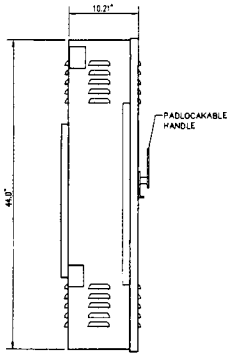

SIDE VIEW (6 / S-1)
SCALE: 1-1/2"=1'-0"

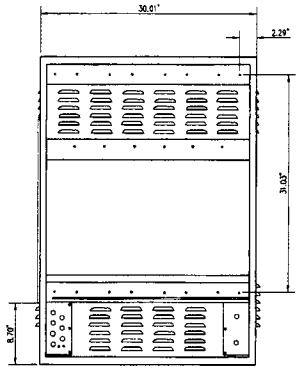

FRONT VIEW (7 / S-1)
SCALE: 1-1/2"=1'-0"

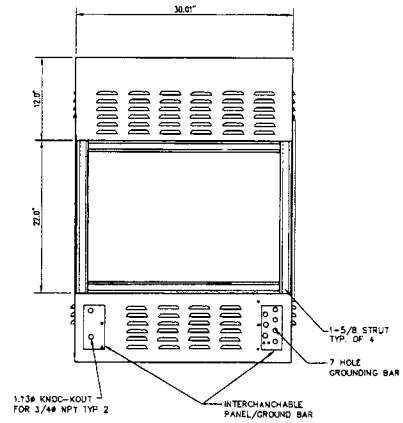

REAR VIEW (8 / S-1)
SCALE: 1-1/2"=1'-0"

entrex communication services, inc.
1575 Eye Street, N.W. Suite 350
WASHINGTON, D.C. 20005
PHONE: (202)408-0960
FAX: (202)408-0961

SUBMITTALS

DATE	DESCRIPTION	REV.
08-04-10	NEW NODES 12A,17A & 27A	0
09-11-10	STAFF REVIEW COMMENTS	1
12-10-10	REMOVE SPRINT ANTENNA	2
04-29-11	FOUND PROPERTY MARKER	3
06-3'-11	ANTENNA CONF. & DETAILS	4

SEAL:

newpath NETWORKS
1300 N Northlake Way
Seattle, WA 98103
www.newpathnetworks.net

at&t

New Cingular Wireless PCS, LLC
By: AT&T Mobility Corporation
Its: Manager

PROJECT NO:	1002.483
DESIGNER:	F.Y.
ENGINEER:	M.M.

SCALE:
0 1/2 1
GRAPHIC SCALE IN INCHES

NODES 3, 4 & 11
GREAT FALLS DAS
GREAT FALLS
VIRGINIA
2232 REVIEW

TITLE:

ANTENNA LAYOUT PLAN, EQUIPMENT AND MOUNTING DETAILS

SHEET NUMBER:

S-1

Attachment B

MEMORANDUM

Fairfax County Department of Planning and Zoning
Planning Division, Suite 730
12055 Government Center Parkway, Fairfax, Virginia 22035-5505

EXPEDITE

DATE: September 23, 2010

2011 – 0336

TO: Distribution Below

FROM: David B. Marshall, Chief
Facilities Planning Branch, Planning Division, DPZ

SUBJECT: 2232 Review Application
Application No.: 2232-D10-18 TAX MAP: Near 3-3 ((1)) 18B, 3-3 ((1)) 27 and 8-1 ((7)) 1A

Attached for your Review and Comment is a 2232 Review Application submitted by Newpath Networks LLC/New Cingular Wireless PCS LLC requesting that the Fairfax County Planning Commission make a determination, pursuant to Va. Code Section 15.2-2232, whether this proposal to modification of three (3) existing Sprint Nextel distributed antenna system (DAS) nodes in Great Falls area is substantially in accord with provisions of the adopted Comprehensive Plan. To be considered in the staff analysis, **send, fax (703-324-3056), or e-mail (anita.capps@fairfaxcounty.gov) your comments to Anita Capps (tel. 703-324-1357) by September 24, 2010.**

EXPEDITE

Distribution:

- ❑ **DIT** / Technology Infrastructure Div.
- ❑ **DOT** / Transportation Planning Div.

DPWES /
- ❑ Environment & Facilities Review Div.
- ❑ Urban Forestry Div.
- ❑ Wastewater Planning & Monitoring Div.

DPZ /
- ❑ Planning Div. - Env. & Dev. Review Branch
- ❑ Planning Div. - Historic Preservation
- ❑ Zoning Administration Div.
- ❑ Zoning Evaluation Div.

- ❑ **FCPA** / Planning & Development Div.
- ❑ **FCPS** / Design and Construction Svcs.
- ❑ **FCWA** / Planning & Engineering Div.
- ❑ **Fire & Rescue** / Strategic Planning
- ❑ **VDOT** / Resident Engineer
- ❑ ______________________
- ❑ ______________________
- ❑ ______________________

* *

❑ **ZAD (for proposed telecommunications facilities): Permitted in accordance with and subject to the provisions of Zoning Ordinance Section 2-514** ______________________

Properties are zoned R-E District and are not located within or along major thoroughfares. Pole #HB81 (Node 11) meets Par. 2A of Sect. 2-514 of the Zoning Ordinance. However, Poles #BH73 (Node 3) and #GG68 (Node 4) do not meet Par. 2A because the antennas (including the relocated Sprint antenna) extend more than 8.5 feet above the pole and therefore, special exception approval is required for these two proposed installations. In addition, Pole #GG68 (Node 4) appears to not be located entirely in the ROW. Par. 2A is only applicable when located entirely within road right-of-way. Therefore, even if the pole height were reduced, the proposed installation on this pole would still require special exception approval.

Lorrie Kirst 9/24/10

§ 15.2-2232. Legal status of plan.

A. Whenever a local planning commission recommends a comprehensive plan or part thereof for the locality and such plan has been approved and adopted by the governing body, it shall control the general or approximate location, character and extent of each feature shown on the plan. Thereafter, unless a feature is already shown on the adopted master plan or part thereof or is deemed so under subsection D, no street or connection to an existing street, park or other public area, public building or public structure, public utility facility or public service corporation facility other than railroad facility, whether publicly or privately owned, shall be constructed, established or authorized, unless and until the general location or approximate location, character, and extent thereof has been submitted to and approved by the commission as being substantially in accord with the adopted comprehensive plan or part thereof. In connection with any such determination, the commission may, and at the direction of the governing body shall, hold a public hearing, after notice as required by § 15.2-2204.

B. The commission shall communicate its findings to the governing body, indicating its approval or disapproval with written reasons therefor. The governing body may overrule the action of the commission by a vote of a majority of its membership. Failure of the commission to act within sixty days of a submission, unless the time is extended by the governing body, shall be deemed approval. The owner or owners or their agents may appeal the decision of the commission to the governing body within ten days after the decision of the commission. The appeal shall be by written petition to the governing body setting forth the reasons for the appeal. The appeal shall be heard and determined within sixty days from its filing. A majority vote of the governing body shall overrule the commission.

C. Widening, narrowing, extension, enlargement, vacation or change of use of streets or public areas shall likewise be submitted for approval, but paving, repair, reconstruction, improvement, drainage or similar work and normal service extensions of public utilities or public service corporations shall not require approval unless involving a change in location or extent of a street or public area.

D. Any public area, facility or use as set forth in subsection A which is identified within, but not the entire subject of, a submission under either § 15.2-2258 for subdivision or provision 8 of § 15.2-2286 for development or both may be deemed a feature already shown on the adopted master plan, and, therefore, excepted from the requirement for submittal to and approval by the commission or the governing body; provided, that the governing body has by ordinance or resolution defined standards governing the construction, establishment or authorization of such public area, facility or use or has approved it through acceptance of a proffer made pursuant to § 15.2-2303.

E. Approval and funding of a public telecommunications facility by the Virginia Public Broadcasting Board pursuant to Article 12 (§ 2.2-2426 et seq.) of Chapter 24 of Title 2.2 shall be deemed to satisfy the requirements of this section and local zoning ordinances with respect to such facility with the exception of television and radio towers and structures not necessary to house electronic apparatus. The exemption provided for in this subsection shall not apply to facilities existing or approved by the Virginia Public Telecommunications Board prior to July 1, 1990. The Virginia Public Broadcasting Board shall notify the governing body of the locality in advance of any meeting where approval of any such facility shall be acted upon.

F. On any application for a telecommunications facility, the commission's decision shall comply with the requirements of the Federal Telecommunications Act of 1996. Failure of the commission to act on any such application for a telecommunications facility under subsection A submitted on or after July 1, 1998, within ninety days of such submission shall be deemed approval of the application by the commission unless the governing body has authorized an extension of time for consideration or the applicant has agreed to an extension of time. The governing body may extend the time required for action by the local commission by no more than sixty additional days. If the commission has not acted on the application by the end of the extension, or by the end of such longer period as may be agreed to by the applicant, the application is deemed approved by the commission.

(Code 1950, §§ 15-909, 15-923, 15-964.10; 1958, c. 389; 1960, c. 567; 1962, c. 407, § 15.1-456; 1964, c. 528; 1966, c. 596; 1968, c. 290; 1975, c. 641; 1976, c. 291; 1978, c. 584; 1982, c. 39; 1987, c. 312; 1989, c. 532; 1990, c. 633; 1997, cc. 587, 858; 1998, c. 683.)