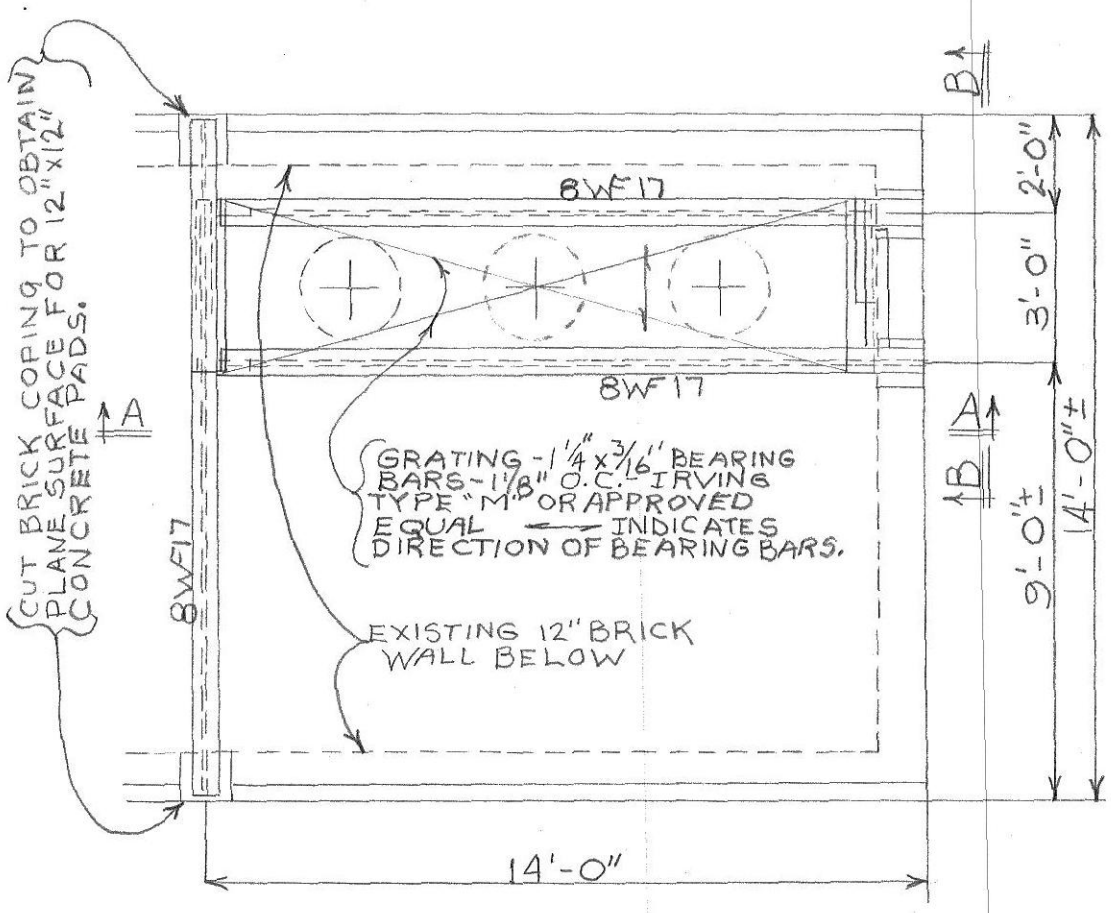

PLAN OF TRANSFORMER PLATFORM FRAMING AT BRICKYARD

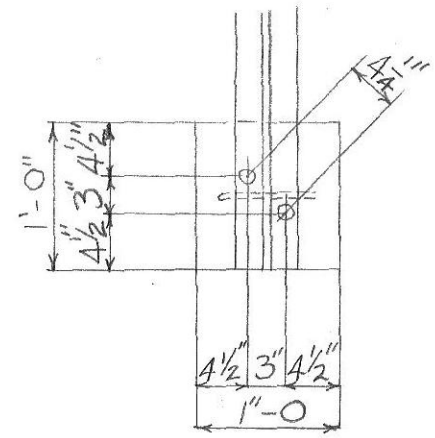

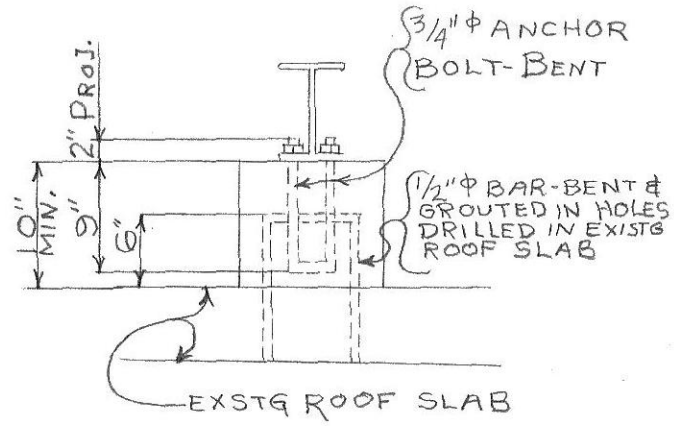

TYPICAL CONCRETE PAD DETAIL

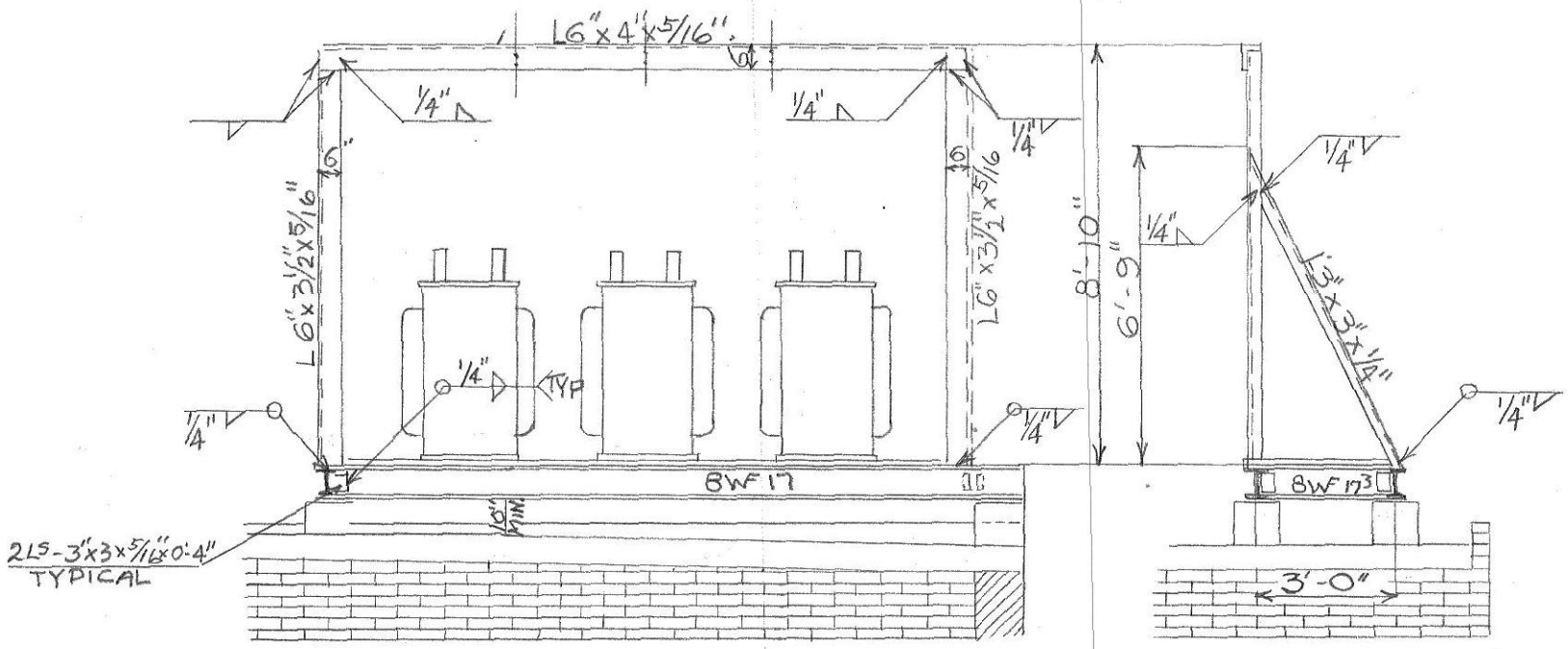

SECTION A-A

SECTION B-B

DRAWER # 7

BRICKYARD SUBSTATION & ELKHORN PUMPING STA. TRANSFORMERS