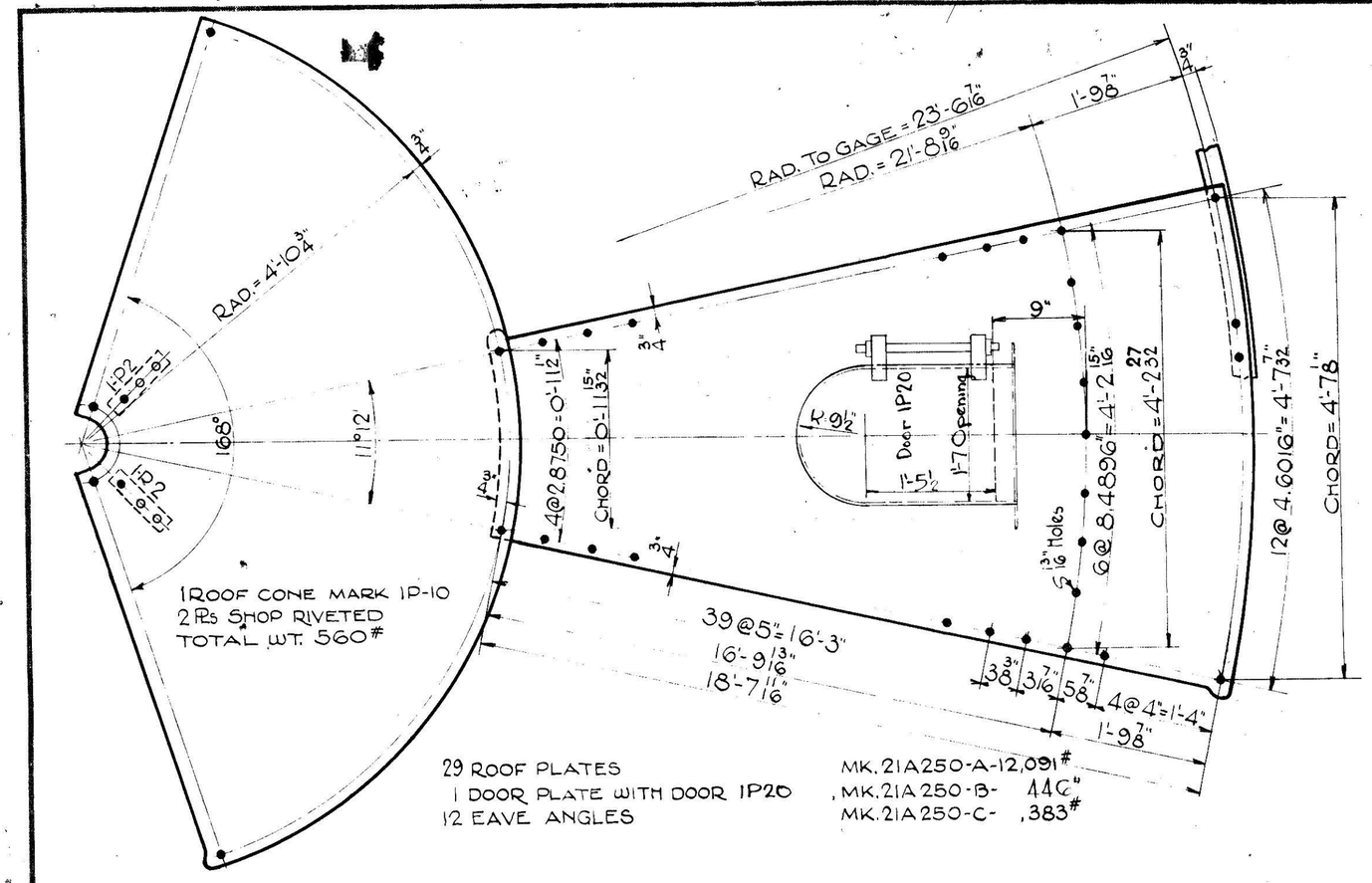

29 ROOF PLATES MK. 21A250-A-12,091#
1 DOOR PLATE WITH DOOR 1P20 MK. 21A250-B- 446"
12 EAVE ANGLES MK. 21A250-C- ,383#

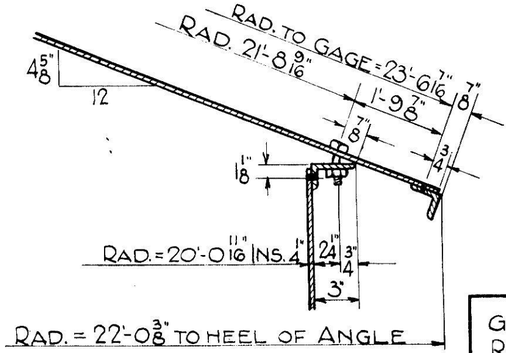

~ SECTION THRU EAVE ~

MATERIAL for INDEX

S.P.	MARK	A.P.	DESCRIPTION	FIN. LGTH. FT.	FIN. LGTH. IN.	SHEAR LGTH FT.	SHEAR LGTH IN.	WT	HOLES
1	1P-10		Roof Cone						
		2	PLs. Sketch x 1/2						
		ORD.	1 PL 60" x 7.65 (1 cuts 2)			19	0	560	178
	1P-2	4	Bars 2" x 1/4"	0	7 1/4			4	12
29	21A250-A		Roof Plates						
		29	PLs Sketch x 1/2					12,091	3335
		ORD.	15 PLs 71 x 7.05 (1 cuts 2)	19	0				
1	21A250-B		Roof Sect. with Door	1P20					
		1	PL Sketch x 3/8"					446	113
		ORD.	with 21A250-A						
			Door 1P-6						
	1P-6A	1	L-2" x 1 1/2" x 1/4" (curved)	2	9 3/8			8	7
	1P-6B PL	2	Ls 2" x 1 1/2" x 1/4	2	9 1/2			16	14
	1P-6C	1	PL-21" x 3/16"	2	3			30	20
	1P-3	2	6" Galv. Hinges					2	12
	1P-4A	1	Pin 3/8" Diam	0	6 1/2			1	
	1P-4B	1	Pc. Chain & Rings	1	3				
	1P-5A	1	Bt. Bar 1 1/2" x 1/4"	0	9			1	7
	1P-5B	1	Bt. Bar 1 1/2" x 1/4"	0	7			1	3
			Eave Angles						
12	21A250-C		Ls 2" x 1 1/2 x 1/4 (curved)	11	6 7/16	11	9 1/2	383	360
185	1P-8		Bev. Hd. Bolts 5/8" Diam. x 1 1/2"					76	

GENERAL NOTES
Rivets 7/16" ø
Open Holes 1/2"
Unless Noted

FIELD RIVETS
SHIP. QUANTITIES

No.	DIAM	LGTH.	WT.
1550	7/16	7/8	104
35	"	1 1/4	3
35	"	1 1/8	3
365	"		25

SHOP RIVETS.

No.	DIAM	LGTH.	WT.
30	7/16	7/8	2

REVISIONS

No.	DATE	BY	REMARKS
1	4-19-28	A.J.K.	Ord Size of Pl.
2	7-3-29	RJC SWH	Rivets
3	11/26/30	RJC Hockey	1P20 Roof Door

CHICAGO BRIDGE & IRON WORKS
CHICAGO, ILLINOIS

STANDARD 3/16 ROOF ~ SLOPE 4 5/8:12
For
40'-0" DIAM. TANK ~ 30" BALCONY
CAPACITY 250,000 GALLONS

DRAWN BY Wessman DATE 3-23-28
TRACED BY "
CHECKED BY D.M.C. " 10-16-24
SHEET ◯ OF ◯

INDEX No.
21A250

Note:- Duplicate of Sheet dated 10-16-24

Folio 250-300E

Blueprints to Shop
Chicago 7-11-24 (3) 9-12-30
Greenville 9-3/13/25 (3) 9-12-30
Bridgeburg 6-11/17/26 (3) 9-12-30
5-1-10-31
Birmingham 3-1-12-30 8-4-2-31