STATE	FEDERAL AID PROJECT	STATE ROUTE	STATE PROJECT	SHEET NO.
VA.		00	8102 - 029 - 065 (SEE TABULATION BELOW FOR SECTION NUMBERS)	1

FOR INDEX OF SHEETS SEE SHEET 1B

THIS PROJECT WAS DEVELOPED UTILIZING THE DEPARTMENT'S ENGINEERING DESIGN PACKAGE (GEOPAK).
GEOPAK Computer Identification No. 103907

COMMONWEALTH OF VIRGINIA

DEPARTMENT OF TRANSPORTATION

PLAN AND PROFILE OF PROPOSED STATE HIGHWAY

FAIRFAX COUNTY
JONES BRANCH CONNECTOR
FROM: JONES BRANCH DRIVE
TO: DOLLEY MADISON BOULEVARD (ROUTE 123)

FUNCTIONAL CLASSIFICATION AND TRAFFIC DATA	
URBAN COLLECTOR	
	Fr: Jones Branch Drive To: Dolley Madison Boulevard (Route 123)
ADT	
ADT	
DHV	
D (%) (design hour)	
T (%) (design hour)	
V (MPH)	30

THESE PLANS ARE DEVELOPED IN ACCORDANCE WITH THE "TRANSPORTATION DESIGN STANDARDS FOR TYSONS CORNER URBAN CENTER" DATED SEPTEMEBER 13, 2011.

DESIGN EXCEPTIONS		
STA. TO STA.	REASON FOR EXCEPTION	APPROVAL DATE
71+00 TO 75+60 JBEWN	SHOULDER WIDTH	
45+00 TO 45+65 JBCON	GRASS STREETSCAPE < 4'	
18+65 TO 47+00 JBCON	LANE WIDTHS < 12'	

30% PLANS
JANUARY 11, 2013

THESE PLANS ARE UNFINISHED AND ARE NOT TO BE USED FOR ANY TYPE OF CONSTRUCTION.

SCALE
0' 400' 800'

TIER 1 PROJECT

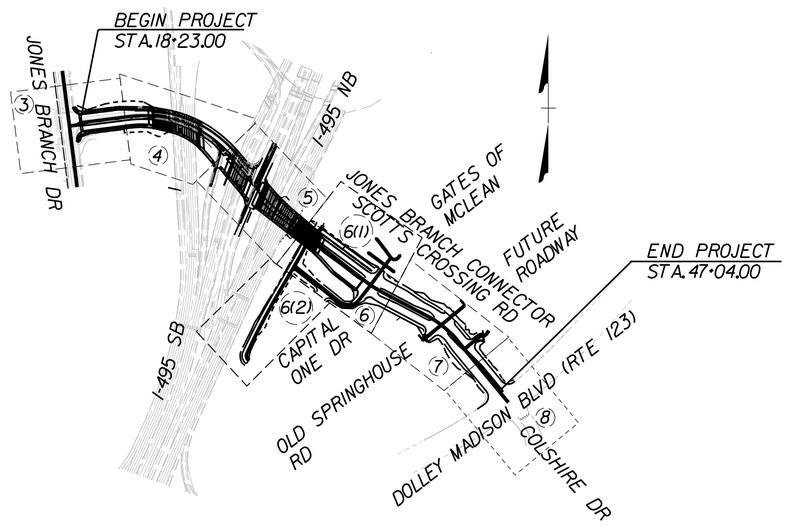

CONVENTIONAL SIGNS

STATE LINE
COUNTY LINE
CITY,TOWN OR VILLAGE
RIGHT OF WAY LINE
FENCE LINE
UNFENCED PROPERTY LINE
FENCED PROPERTY LINE
WATER LINE
SANITARY SEWER LINE
GAS LINE
ELECTRIC UNDERGROUND CABLE
TRAVELED WAY
GUARD RAIL
RETAINING WALL
RAILROADS
BASE OR SURVEY LINE
LEVEE OR EMBANKMENT
BRIDGES
CULVERTS
DROP INLET
POWER POLES
TELEPHONE OR TELEGRAPH POLES
TELEPHONE OR TELEGRAPH LINES
HEDGE
TREES
HEAVY WOODS
GROUND ELEVATION
GRADE ELEVATION

THE COMPLETE ELECTRONIC PDF VERSION OF THE PLAN ASSEMBLY AS AWARDED, HAS BEEN SEALED AND SIGNED USING DIGITAL SIGNATURES AND THE OFFICIAL PLAN ASSEMBLY IN ELECTRONIC FORMAT IS STORED IN THE VDOT CENTRAL OFFICE PLAN LIBRARY, INCLUDING ALL SUBSEQUENT REVISIONS, WILL BE THE OFFICIAL CONSTRUCTION PLANS. FOR INFORMATION RELATIVE TO ELECTRONIC FILES AND LAYERED PLANS, SEE THE GENERAL NOTES.

DESIGN FEATURES RELATING TO CONSTRUCTION OR TO REGULATION AND CONTROL OF TRAFFIC MAY BE SUBJECT TO CHANGE AS DEEMED NECESSARY BY THE DEPARTMENT.

THIS PROJECT IS TO BE CONSTRUCTED IN ACCORDANCE WITH THE DEPARTMENT'S 2007 ROAD AND BRIDGE SPECIFICATIONS, 2008 ROAD AND BRIDGE STANDARDS, 2009 MUTCD, 2011 VIRGINIA SUPPLEMENT TO THE MUTCD, 2011 VIRGINIA WORK AREA PROTECTION MANUAL AND AS AMENDED BY CONTRACT PROVISIONS AND THE COMPLETE ELECTRONIC PDF VERSION OF THE PLAN ASSEMBLY.

ALL CURVES ARE TO BE SUPERELEVATED, TRANSITIONED AND WIDENED IN ACCORDANCE WITH STANDARD N/A, EXCEPT WHERE OTHERWISE NOTED.

THE ORIGINAL APPROVED TITLE SHEET(S), INCLUDING ORIGINAL SIGNATURES, ARE FILED IN THE VDOT CENTRAL OFFICE PLAN LIBRARY. ANY MISUSE OF ELECTRONIC FILES, INCLUDING SCANNED SIGNATURES, IS ILLEGAL AND ENFORCED TO THE FULL EXTENT OF THE LAW.

PROJECT MANAGER Sung-S. Shin, PE. (703) 877-5753
SURVEYED BY
DESIGN SUPERVISED BY John M. McDowell, PE. (703) 246-0028 (RKK)
DESIGNED BY Rummel, Klepper & Kahl, LLP (703) 246-0028

Population 1,081,726 (2010 Census)

STATE PROJECT NO.	SECTION	FEDERAL AID PROJECT NO.	TYPE CODE	UPC NO.	EQUALITIES FEET	LENGTH INCLUDING BRIDGE(S) FEET	LENGTH INCLUDING BRIDGE(S) MILES	LENGTH EXCLUDING BRIDGE(S) FEET	LENGTH EXCLUDING BRIDGE(S) MILES	BRIDGE PROJECT NO.	TYPE PROJECT	DESCRIPTION
8102 - 029 - 065				103907		2881.00	0.546	2173.92	0.412		PRELIM. ENG.	FROM JONES BRANCH DRIVE
												TO DOLLEY MADISON BLVD
						259.50	0.049			2248		
						130.03	0.025			2242		
						416.00	0.079			2902		

Project Lengths are based on Jones Branch Connector Construction Baseline.

RECOMMENDED FOR APPROVAL FOR RIGHT OF WAY ACQUISITION	
DATE	DISTRICT PLANNING AND INVESTMENT MANAGER
DATE	DISTRICT PROJECT DEVELOPMENT ENGINEER
APPROVED FOR RIGHT OF WAY ACQUISITION	
DATE	DISTRICT ADMINISTRATOR

REVISED

RECOMMENDED FOR APPROVAL FOR CONSTRUCTION	
DATE	DISTRICT PLANNING AND INVESTMENT MANAGER
DATE	DISTRICT PROJECT DEVELOPMENT ENGINEER
APPROVED FOR CONSTRUCTION	
DATE	DISTRICT ADMINISTRATOR

Copyright 20 , Commonwealth of Virginia

REVISED	STATE	STATE ROUTE	STATE PROJECT	SHEET NO
	VA.		8102 - 029 - 065	NR-1

NOTES TO REVIEWER

ROADWAY DESIGN CRITERIA TABLE

Roadway	Jones Branch Connector		
Authority	**VDOT**	**Transportation Design Standards for Tysons Corner Urban Center**	**AASHTO**
Functional Class	Minor Arterial or Collector	Avenue	Collector
Design Speed (mph)	30	30	30
Number of Through Lanes	--	4-6	"Determined from a capacity analysis"
Design Vehicle	--	City-Bus	
Control Vehicle	--	WB-50	
Clear Zone	16'		16'
ADT	>2000	>2000	>2000
Percent Trucks (%)	Pending	Pending	Pending
Level of Service Standards	See AASHTO	E	D
Terrain	Rolling	Rolling	Rolling
Geometric Design Standard	GS-7; ULS; curb and gutter.	Tysons Corner Urban Center	
Minimum Radius	273'	333'	
Minimum Length of Horizontal Curve	--	--	450'
Superelevation	Emax = 0.02	Standard Crown when R>333' or Emax= 0.02 for Rmin 273'.	
Minimum Stopping Sight distance	200'	--	
Minimum Vertical Grade	0.5%	--	0.5%
Maximum Vertical Grade	11%	--	11%
Sag Minimum K-value	37	37	37
Crest Minimum K-value	19	19	19
Minimum length of Vertical Curve	--	--	90
Curb and Gutter type	CG-6: 6" high C&G and 6" high curb	--	--
Slope Standard	2:1	--	--
Signalized Intersection Spacing	660'	525'-660'	--
Unsignalized Intersection Spacing (full access)	225-440'	200'-660	--
Median Width	--	24'-36' with circulator	--
Lane widths	11' (12' at interchanges & for ADT > 2000)	10'-11'	--
Turn Lane widths		10'-11' with 11' for commerical and mixed use	30' Total for Double Left Turn
On-Street Parking Width	8-10'	8'	--
Raised Median Island	--	Optional	Optional
Minimum Storage Length for turn lanes	--	Lt turn is 60' and Rt turn is 40'	
Minimum Deceleration Lengths for turn lanes	100' (Single) 150' (Double)	See table 7: depends on profile grade	160'
Minimum Taper Ratio for turn lanes	8:1 (Single)	1:5; so Length = 5* offset. Max 100' for single and Max 150' for dual turn lanes	--
Minimum Curb Return	--	10' to 15'	--
Minimum Intersection Sight Distance	310-430'	See table 12: depends on profile grade; 180'-230'.	245-355'
Minimum Sidewalk Width	5'	8'	4-8'
Minimum Landscape Amenity Panel Width	--	8'	--
Min/Max Building Zone Width (sidewalk to building face)	--	4'-12'	--
Bicycle Facilities	--	4' Lane when adjacent to curb with gtr. pan; 5' Lane when adjacent to curb with no gtr. pan; 5' Lane when adjacent to Rt turn lane; 5' lane when adjacent to 8' on-street parking and 6' lane adjacent to 7' on-street parking.	--

DESIGN CONSIDERATION

- TYSONS CORNER DEVELOPMENT STANDARDS, AS APPROVED BY VDOT. BASIS OF DESIGN.
- PROVISIONS MADE FOR FUTURE CIRCULATOR AND TRANSIT PLATFORM AT OLD SPRINGHOUSE ROAD.
- ACCOMMODATES FUTURE RAMP CONNECTION FROM DULLES AIRPORT ACCESS/ TOLL ROAD.
- SIDE ROAD CONNECTIONS PROVIDED TO CAPITAL ONE DEVELOPMENT PER SITE PLAN AS OF FEBRUARY 2012.
- RETAINING WALL STRUCTURES AT TYSONS PARK PLACE II TO BE LOWERED TO MEET ROADWAY GRADE.
- ACCOMMODATES POTENTIAL FUTURE CIRCULATOR IN MEDIAN PER JONES BRANCH CONNECTOR CONCEPT PLAN.

DESIGN ISSUES FOR RESOLUTION

- TWO-LANE RAMP TO NB I-495 EXPRESS LANES: EITHER EMBANKMENT NEEDS TO BE WIDENED, OR DESIGN EXCEPTION REQUIRED.
- TREATMENT OF BACKSLOPE ADJACENT TO TYSON'S PLACE PARKING GARAGE.
- PROVISIONS FOR STORMWATER MANAGEMENT.
- CONFIGURATION OF SIDEWALKS ADJACENT TO METRO RAIL PIERS/STATION.
- MRP DEDICATION OF THE RESERVATION AREA FOR ROAD CONSTRUCTION.
- RETAINING WALL AT CAPITAL ONE.
- PEDESTRIAN STAIR ACCESS TO NEW BRIDGE AT GATES OF McLEAN.
- POSSIBLE DEFERRAL OF THE EXTENSION OF BRIDGE B658 TO ACCOMMODATE THE FUTURE DULLES TOLL ROAD RAMP.

NOTE: THE LANE CONFIGURATION AND STORAGE LENGTH DEDICATED TO BE FINALIZED BASED ON THE DETAILED TRAFFIC ANALYSIS RESULTS.

DESIGN DEVIATIONS FROM VDOT STANDARDS

	VDOT	Transportation Design Standards for Tysons Corner Urban Center
Level of Service Standards	D (from AASHTO)	E
Geometric Design Standard	GS-7; ULS; curb and gutter.	Tysons Corner Urban Center
Minimum Radius	273'	333'
Superelevation	Emax = 0.02	Standard Crown when R>333' or Emax= 0.02 for Rmin 273'.
Signalized Intersection Spacing	660'	525'-660'
Unsignalized Intersection Spacing (full access)	225-440'	200'-660
Lane widths	11' (12' at interchanges & for ADT > 2000)	10'-11'
Minimum Deceleration Lengths for turn lanes	100' (Single) 150' (Double) Both TAPER lengths	See table 7: depends on profile grade
Minimum Taper Ratio for turn lanes	8:1 (Single)	1:5; so Length = 5* offset. Max 100' for single and Max 150' for dual turn lanes
Minimum Intersection Sight Distance	310-430'	See table 12: depends on profile grade; 180'-230'.
Minimum Sidewalk Width	5'	8'

NOT PART OF CONSTRUCTION PLANS
FOR INFORMATION ONLY

PLAN NO.	PROJECT	SHEET NO.
	8102 - 029 - 065	NR-1

PROJECT MANAGER Sung S. Shin, PE (703) 877-5753
DESIGN SUPERVISED BY John M. McDowell, PE (703) 246-0028 (RKK)
DESIGNED BY Rummel, Klepper & Kahl, LLP (703) 246-0028

AUTOTURN EXHIBIT

JONES BRANCH DRIVE AND JONES BRANCH CONNECTOR

REVISED	STATE	STATE ROUTE	STATE PROJECT	SHEET NO
	VA.		8102 - 029 - 065	NR-2

Rummel, Klepper & Kahl, LLP
Fairfax, Virginia
ROADWAY ENGINEER

Rummel, Klepper & Kahl, LLP
Fairfax, Virginia
HYDRAULIC ENGINEER

DESIGN FEATURES RELATING TO CONSTRUCTION OR TO REGULATION AND CONTROL OF TRAFFIC MAY BE SUBJECT TO CHANGE AS DEEMED NECESSARY BY THE DEPARTMENT.

NOTE: THE LANE CONFIGURATION AND STORAGE LENGTH DEDICATED TO BE FINALIZED BASED ON THE DETAILED TRAFFIC ANALYSIS RESULTS.

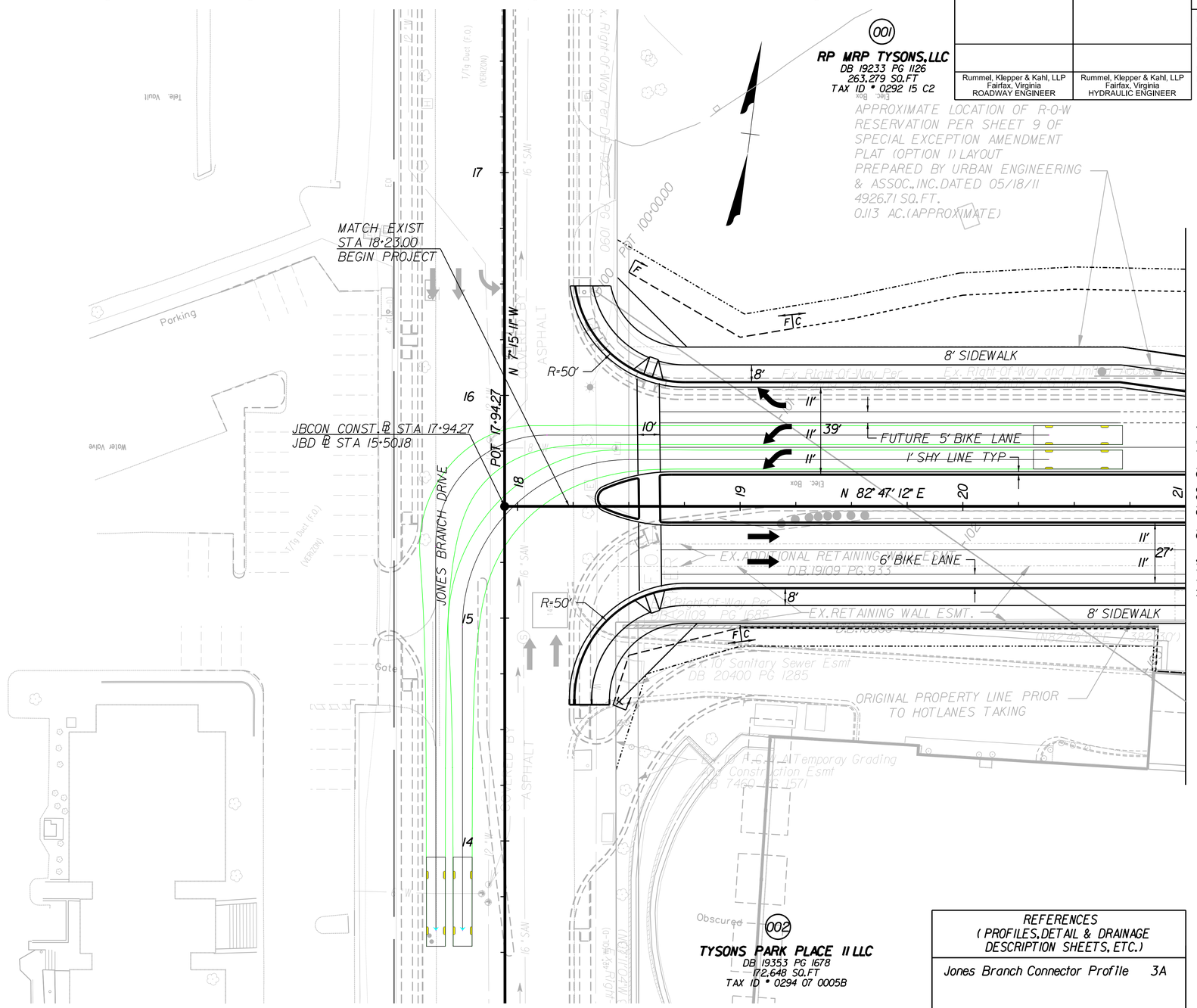

NOTE: See Sheet 1M for Incidental Legend

LEGEND

- Denotes Construction Limits In Cuts
- Denotes Construction Limits In Fills
- Denotes Temporary Easement
- Denotes Permanent Easement
- Denotes Demolition of Pavement
- Denotes Proposed Pavement
- Denotes Mill & Overlay Pavement
- Denotes Existing Bridge
- Denotes Proposed Bridge

REFERENCES (PROFILES, DETAIL & DRAINAGE DESCRIPTION SHEETS, ETC.)	
Jones Branch Connector Profile	3A

NOTE: FEATURES SHOWN AS TOPO ON THIS SHEET ARE BASED ON CONSTRUCTION PLANS FOR "I-495 HOT LANES - SECTION 7," DATED APRIL 13, 2010 AND ARE NOT AS-BUILT

THESE PLANS ARE UNFINISHED AND UNAPPROVED AND ARE NOT TO BE USED FOR ANY TYPE OF CONSTRUCTION OR THE ACQUISITION OF RIGHT OF WAY.

SCALE 0 25' 50'

PLAN NO.	PROJECT	SHEET NO.
	8102 - 029 - 065	NR-2

PROJECT MANAGER Sung S. Shin, PE (703) 877-5753
DESIGN SUPERVISED BY John M. McDowell, PE (703) 246-0028 (RKK)
DESIGNED BY Rummel, Klepper & Kahl, LLP (703) 246-0028

AUTOTURN EXHIBIT

I-495 HOT LANES (MAINLINE LEFT TURN MOVEMENTS)

REVISED	STATE	STATE ROUTE	STATE PROJECT	SHEET NO.
	VA.		8102 - 029 - 065	NR-3

Rummel, Klepper & Kahl, LLP
Fairfax, Virginia
ROADWAY ENGINEER

Rummel, Klepper & Kahl, LLP
Fairfax, Virginia
HYDRAULIC ENGINEER

DESIGN FEATURES RELATING TO CONSTRUCTION OR TO REGULATION AND CONTROL OF TRAFFIC MAY BE SUBJECT TO CHANGE AS DEEMED NECESSARY BY THE DEPARTMENT.

NOTE: THE LANE CONFIGURATION AND STORAGE LENGTH DEDICATED TO BE FINALIZED BASED ON THE DETAILED TRAFFIC ANALYSIS RESULTS.

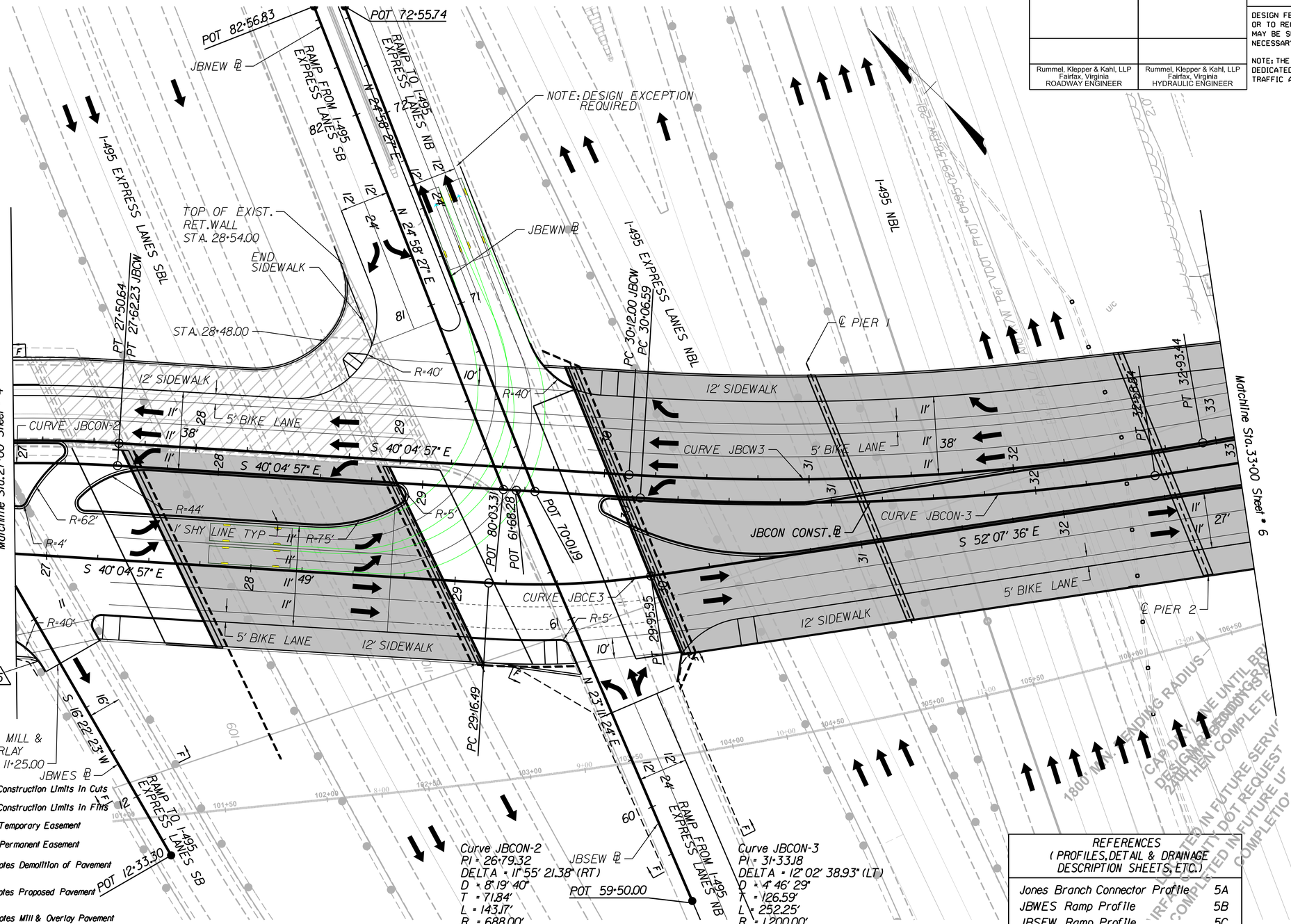

Curve JBCW-2
PI = 27+16.63
DELTA = 7° 29' 10.58" (RT)
D = 8° 11' 49"
T = 45.73'
L = 91.33'
R = 698.99'
PCC = 26+70.90
PT = 27+62.23
Lr = N/A
V = 30 MPH
E = NC

Curve JBCW-3
PI = 31+53.37
DELTA = 13° 26' 16.90" (LT)
D = 4° 46' 29"
T = 141.37'
L = 281.45'
R = 1,200.00'
PC = 30+12.00
PT = 32+93.44
Lr = N/A
V = 30 MPH
E = NC

Curve JBCE-3
PI = 29+56.37
DELTA = 12° 02' 38.93" (LT)
D = 15° 09' 27"
T = 39.88'
L = 79.46'
R = 378.00'
PC = 29+16.49
PT = 29+95.95
Lr = N/A
V = 30 MPH
E = NC

LEGEND

- Denotes Construction Limits In Cuts
- Denotes Construction Limits In Fills
- Denotes Temporary Easement
- Denotes Permanent Easement
- Denotes Demolition of Pavement
- Denotes Proposed Pavement
- Denotes Mill & Overlay Pavement
- Denotes Existing Bridge
- Denotes Proposed Bridge

NOTE: See Sheet 1M for Incidental Legend

Curve JBCON-2
PI = 26+79.32
DELTA = 11° 55' 21.38" (RT)
D = 8° 19' 40"
T = 71.84'
L = 143.17'
R = 688.00'
PCC = 26+07.48
PT = 27+50.64
Lr = N/A
V = 30 MPH
E = 2.00%

Curve JBCON-3
PI = 31+33.18
DELTA = 12° 02' 38.93" (LT)
D = 4° 46' 29"
T = 126.59'
L = 252.25'
R = 1,200.00'
PC = 30+06.59
PT = 32+58.84
Lr = N/A
V = 30 MPH
E = NC

REFERENCES (PROFILES, DETAIL & DRAINAGE DESCRIPTION SHEETS, ETC.)	
Jones Branch Connector Profile	5A
JBWES Ramp Profile	5B
JBSEW Ramp Profile	5C
JBNEW Ramp Profile	5D
JBEWN Ramp Profile	5E

NOTE: FEATURES SHOWN AS TOPO ON THIS SHEET ARE BASED ON CONSTRUCTION PLANS FOR "I-495 HOT LANES - SECTION 7," DATED APRIL 13, 2010 AND ARE NOT AS-BUILT

THESE PLANS ARE UNFINISHED AND UNAPPROVED AND ARE NOT TO BE USED FOR ANY TYPE OF CONSTRUCTION OR THE ACQUISITION OF RIGHT OF WAY.

SCALE 0 25' 50'

PLAN NO.	PROJECT	SHEET NO.
	8102 - 029 - 065	NR-3

PROJECT MANAGER Sung S. Shin, PE (703) 877-5753
DESIGN SUPERVISED BY John M. McDowell, PE (703) 246-0028 (RKK)
DESIGNED BY Rummel, Klepper & Kahl, LLP (703) 246-0028

AUTOTURN EXHIBIT

I-495 HOT LANES (SIDESTREET MOVEMENTS)

REVISED	STATE	STATE ROUTE	STATE PROJECT	SHEET NO.
	VA.		8102 - 029 - 065	NR-4

Rummel, Klepper & Kahl, LLP
Fairfax, Virginia
ROADWAY ENGINEER

Rummel, Klepper & Kahl, LLP
Fairfax, Virginia
HYDRAULIC ENGINEER

DESIGN FEATURES RELATING TO CONSTRUCTION OR TO REGULATION AND CONTROL OF TRAFFIC MAY BE SUBJECT TO CHANGE AS DEEMED NECESSARY BY THE DEPARTMENT.

NOTE: THE LANE CONFIGURATION AND STORAGE LENGTH DEDICATED TO BE FINALIZED BASED ON THE DETAILED TRAFFIC ANALYSIS RESULTS.

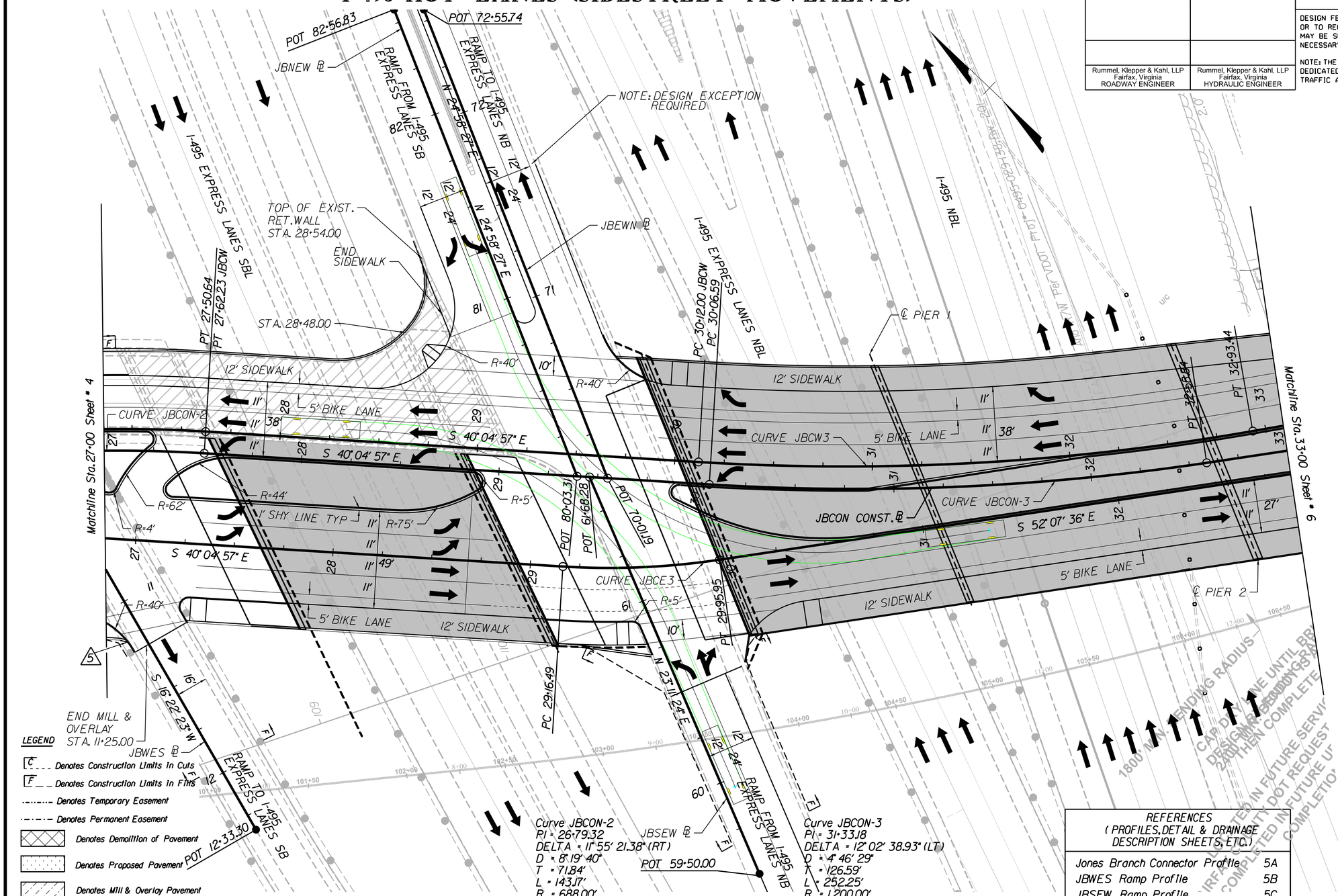

Curve JBCW-2
PI = 27+16.63
DELTA = 7° 29' 10.58" (RT)
D = 8° 11' 49"
T = 45.73'
L = 91.33'
R = 698.99'
PCC = 26+70.90
PT = 27+62.23
Lr = N/A
V = 30 MPH
E = NC

Curve JBCW-3
PI = 31+53.37
DELTA = 13° 26' 16.90" (LT)
D = 4° 46' 29"
T = 141.37'
L = 281.45'
R = 1,200.00'
PC = 30+12.00
PT = 32+93.44
Lr = N/A
V = 30 MPH
E = NC

Curve JBCE-3
PI = 29+56.37
DELTA = 12° 02' 38.93" (LT)
D = 15° 09' 27"
T = 39.88'
L = 79.46'
R = 378.00'
PC = 29+16.49
PT = 29+95.95
Lr = N/A
V = 30 MPH
E = NC

LEGEND

- Denotes Construction Limits In Cuts
- Denotes Construction Limits In Fills
- Denotes Temporary Easement
- Denotes Permanent Easement
- Denotes Demolition of Pavement
- Denotes Proposed Pavement
- Denotes Mill & Overlay Pavement
- Denotes Existing Bridge
- Denotes Proposed Bridge

NOTE: See Sheet 1M for Incidental Legend

Curve JBCON-2
PI = 26+79.32
DELTA = 11° 55' 21.38" (RT)
D = 8° 19' 40"
T = 71.84'
L = 143.17'
R = 688.00'
PCC = 26+07.48
PT = 27+50.64
Lr = N/A
V = 30 MPH
E = 2.00%

Curve JBCON-3
PI = 31+33.18
DELTA = 12° 02' 38.93" (LT)
D = 4° 46' 29"
T = 126.59'
L = 252.25'
R = 1,200.00'
PC = 30+06.59
PT = 32+58.84
Lr = N/A
V = 30 MPH
E = NC

REFERENCES (PROFILES, DETAIL & DRAINAGE DESCRIPTION SHEETS, ETC.)	
Jones Branch Connector Profile	5A
JBWES Ramp Profile	5B
JBSEW Ramp Profile	5C
JBNEW Ramp Profile	5D
JBEWN Ramp Profile	5E

NOTE: FEATURES SHOWN AS TOPO ON THIS SHEET ARE BASED ON CONSTRUCTION PLANS FOR "I-495 HOT LANES - SECTION 7," DATED APRIL 13, 2010 AND ARE NOT AS-BUILT

THESE PLANS ARE UNFINISHED AND UNAPPROVED AND ARE NOT TO BE USED FOR ANY TYPE OF CONSTRUCTION OR THE ACQUISITION OF RIGHT OF WAY.

SCALE 0 25' 50'

PLAN NO.	PROJECT	SHEET NO.
	8102 - 029 - 065	NR-4

PROJECT MANAGER Sung S. Shin, PE (703) 877-5753
DESIGN SUPERVISED BY John M. McDowell, PE (703) 246-0028 (RKK)
DESIGNED BY Rummel, Klepper & Kahl, LLP (703) 246-0028

AUTOTURN EXHIBIT

GATES OF McLEAN AND CAPITAL ONE DRIVE (MAINLINE MOVEMENTS)

REVISED	STATE	STATE ROUTE	STATE PROJECT	SHEET NO
	VA.		8102 - 029 - 065	NR-5

DESIGN FEATURES RELATING TO CONSTRUCTION OR TO REGULATION AND CONTROL OF TRAFFIC MAY BE SUBJECT TO CHANGE AS DEEMED NECESSARY BY THE DEPARTMENT.

NOTE: THE LANE CONFIGURATION AND STORAGE LENGTH DEDICATED TO BE FINALIZED BASED ON THE DETAILED TRAFFIC ANALYSIS RESULTS.

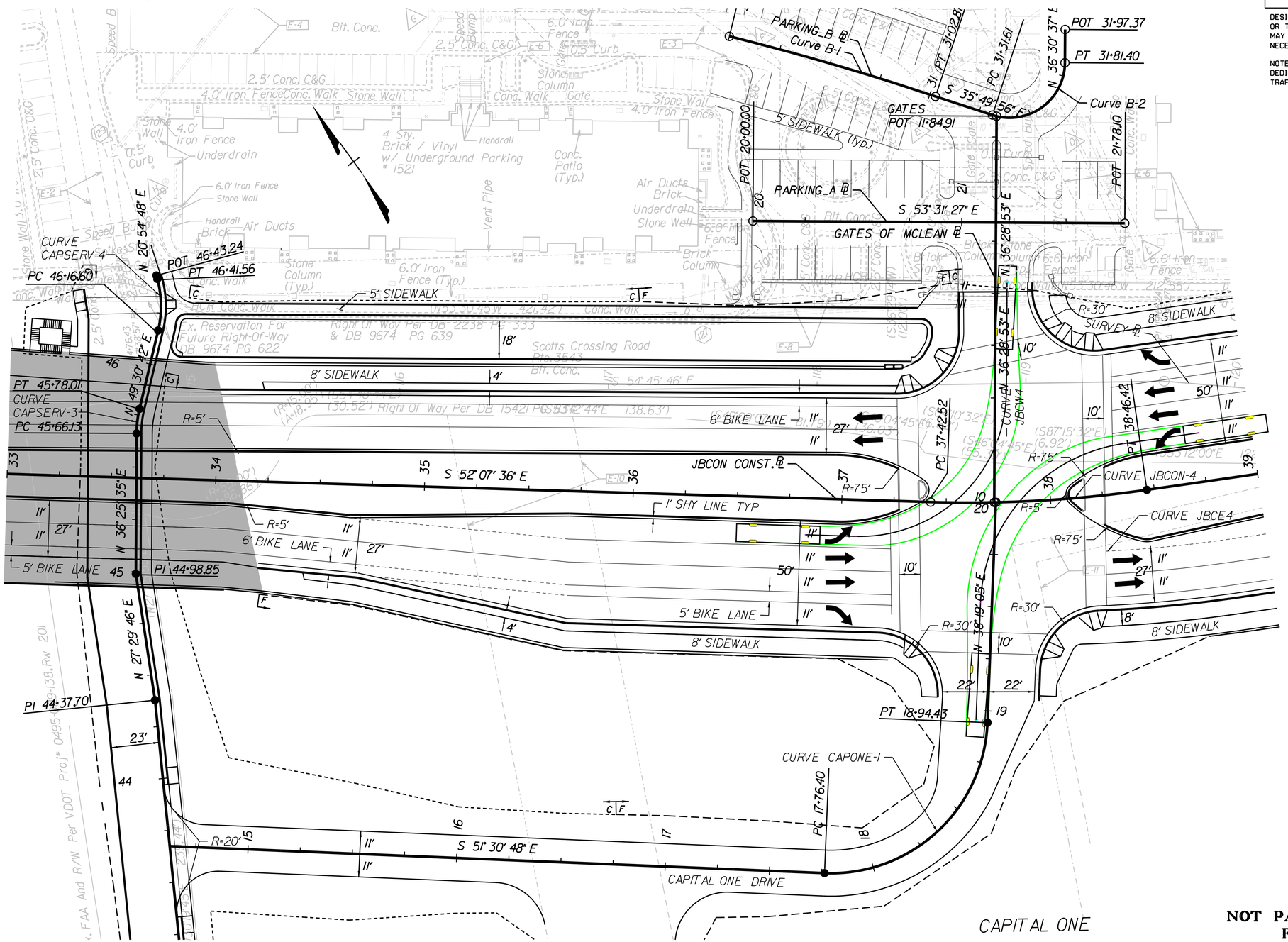

NOT PART OF CONSTRUCTION PLANS FOR INFORMATION ONLY

SCALE 0 25' 50'

PLAN NO.	PROJECT	SHEET NO.
	8102 - 029 - 065	NR-5

PROJECT MANAGER Sung S. Shin, PE (703) 877-5753
DESIGN SUPERVISED BY John M. McDowell, PE (703) 246-0028 (RKK)
DESIGNED BY Rummel, Klepper & Kahl, LLP (703) 246-0028

AUTOTURN EXHIBIT

GATES OF McLEAN AND CAPITAL ONE DRIVE (SIDESTREET MOVEMENTS)

REVISED	STATE	STATE ROUTE	STATE PROJECT	SHEET NO
	VA.		8102 - 029 - 065	NR-6

DESIGN FEATURES RELATING TO CONSTRUCTION OR TO REGULATION AND CONTROL OF TRAFFIC MAY BE SUBJECT TO CHANGE AS DEEMED NECESSARY BY THE DEPARTMENT.

NOTE: THE LANE CONFIGURATION AND STORAGE LENGTH DEDICATED TO BE FINALIZED BASED ON THE DETAILED TRAFFIC ANALYSIS RESULTS.

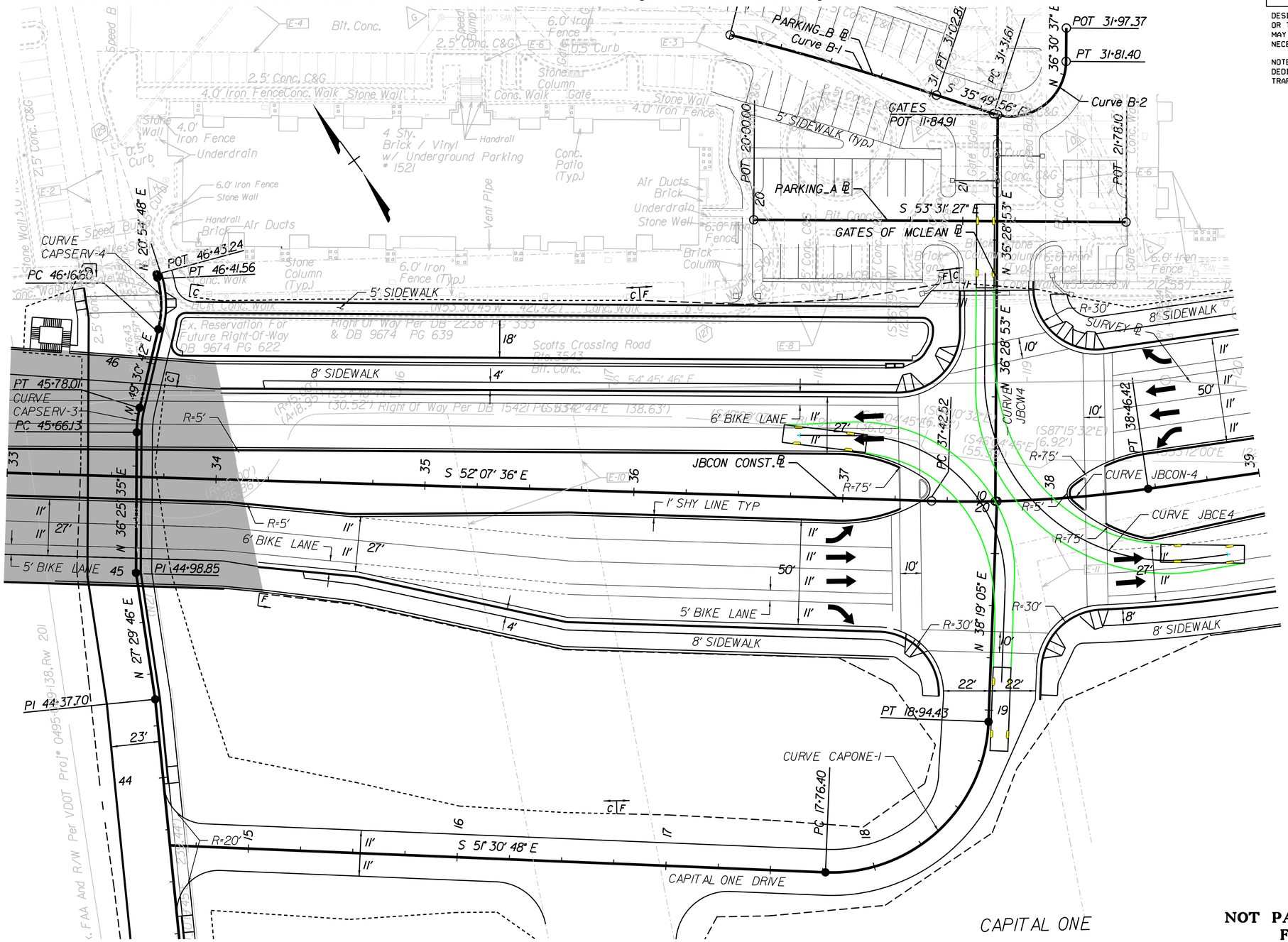

NOT PART OF CONSTRUCTION PLANS FOR INFORMATION ONLY

SCALE 0 25' 50'

PLAN NO.	PROJECT	SHEET NO.
	8102 - 029 - 065	NR-6

PROJECT MANAGER Sung S. Shin, PE (703) 877-5753
DESIGN SUPERVISED BY John M. McDowell, PE (703) 246-0028 (RKK)
DESIGNED BY Rummel, Klepper & Kahl, LLP (703) 246-0028

AUTOTURN EXHIBIT

OLD SPRINGHOUSE ROAD AND FUTURE ROADWAY (MAINLINE MOVEMENTS)

REVISED	STATE	STATE ROUTE	STATE PROJECT	SHEET NO
	VA.		8102 - 029 - 065	NR-7

DESIGN FEATURES RELATING TO CONSTRUCTION OR TO REGULATION AND CONTROL OF TRAFFIC MAY BE SUBJECT TO CHANGE AS DEEMED NECESSARY BY THE DEPARTMENT.

NOTE: THE LANE CONFIGURATION AND STORAGE LENGTH DEDICATED TO BE FINALIZED BASED ON THE DETAILED TRAFFIC ANALYSIS RESULTS.

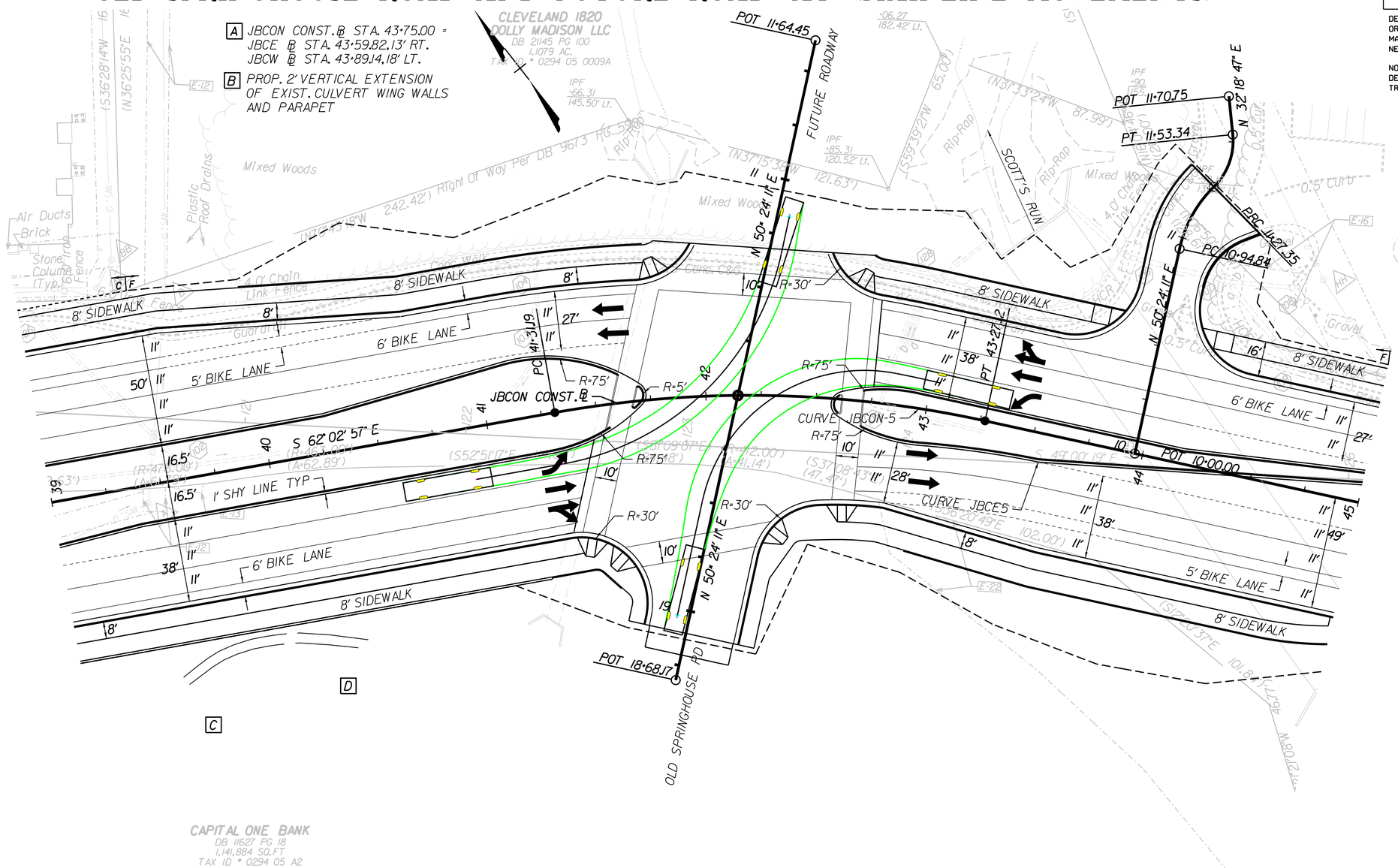

NOT PART OF CONSTRUCTION PLANS
FOR INFORMATION ONLY

SCALE 0 25' 50'

PLAN NO.	PROJECT	SHEET NO.
	8102 - 029 - 065	NR-7

PROJECT MANAGER Sung S. Shin, PE (703) 877-5753
DESIGN SUPERVISED BY John M. McDowell, PE (703) 246-0028 (RKK)
DESIGNED BY Rummel, Klepper & Kahl, LLP (703) 246-0028

AUTOTURN EXHIBIT

OLD SPRINGHOUSE ROAD AND FUTURE ROADWAY (SIDESTREET MOVEMENTS)

REVISED	STATE	STATE ROUTE	STATE PROJECT	SHEET NO
	VA.		8102 - 029 - 065	NR-8

DESIGN FEATURES RELATING TO CONSTRUCTION OR TO REGULATION AND CONTROL OF TRAFFIC MAY BE SUBJECT TO CHANGE AS DEEMED NECESSARY BY THE DEPARTMENT.

NOTE: THE LANE CONFIGURATION AND STORAGE LENGTH DEDICATED TO BE FINALIZED BASED ON THE DETAILED TRAFFIC ANALYSIS RESULTS.

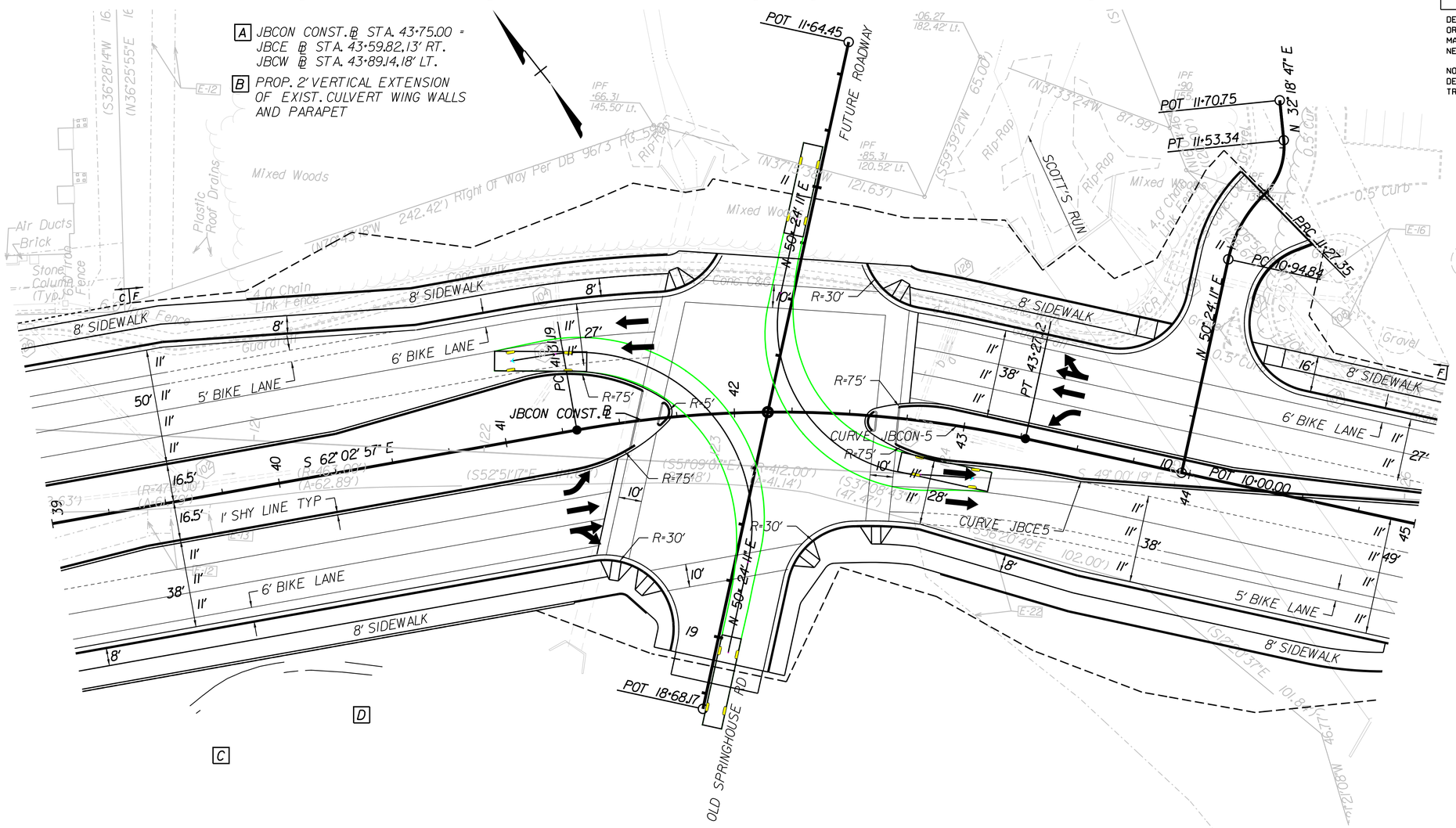

NOT PART OF CONSTRUCTION PLANS
FOR INFORMATION ONLY

SCALE 0 25' 50'

PLAN NO.	PROJECT	SHEET NO.
	8102 - 029 - 065	NR-8

PROJECT MANAGER Sung S. Shin, PE (703) 877-5753
DESIGN SUPERVISED BY John M. McDowell, PE (703) 246-0028 (RKK)
DESIGNED BY Rummel, Klepper & Kahl, LLP (703) 246-0028

AUTOTURN EXHIBIT

SCOTTS CROSSING RD AND DOLLEY MADISON BLVD

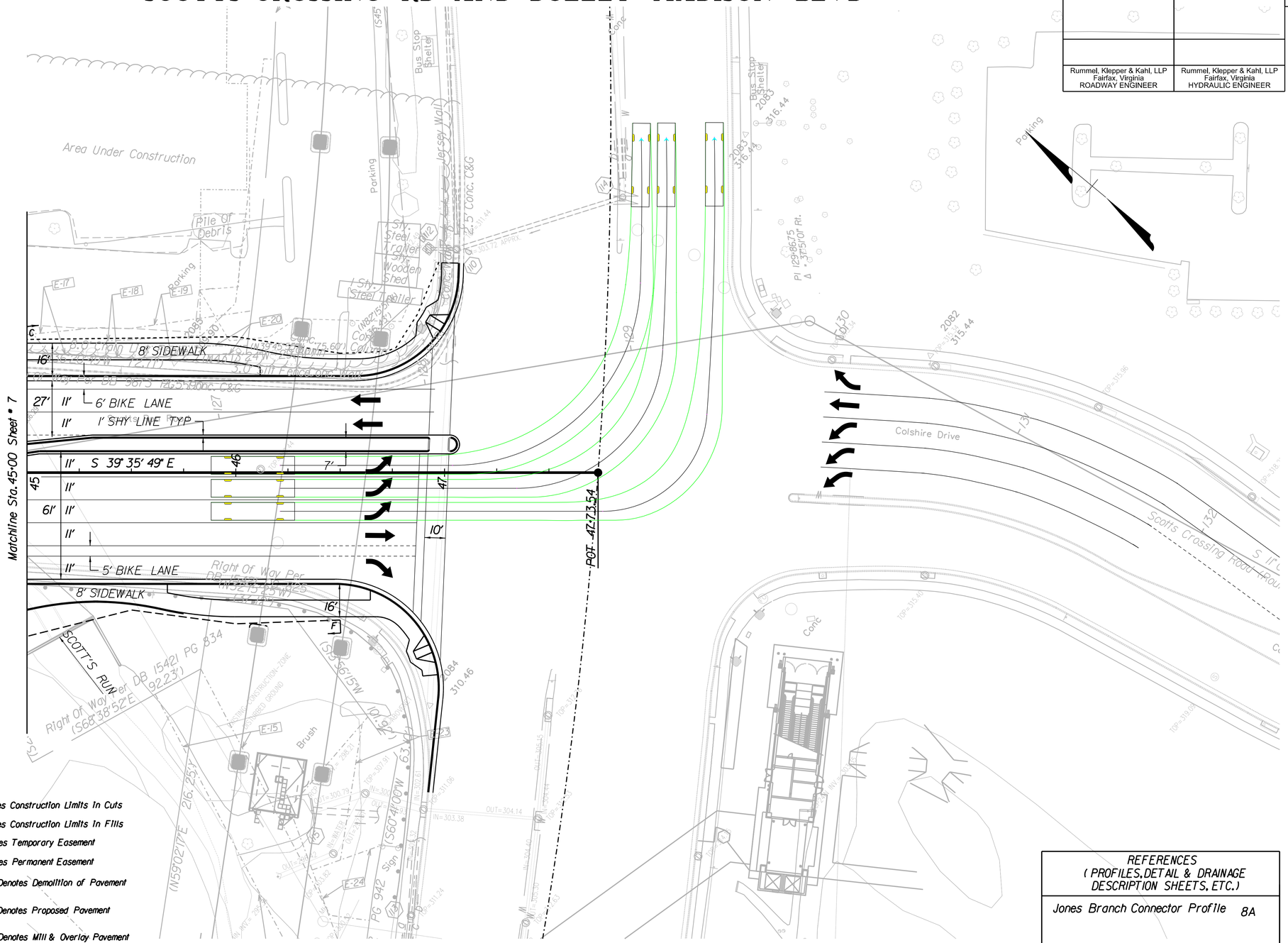

Rummel, Klepper & Kahl, LLP Fairfax, Virginia ROADWAY ENGINEER	Rummel, Klepper & Kahl, LLP Fairfax, Virginia HYDRAULIC ENGINEER

REVISED	STATE	STATE ROUTE	STATE PROJECT	SHEET NO.
	VA.		8102 - 029 - 065	NR-9

DESIGN FEATURES RELATING TO CONSTRUCTION OR TO REGULATION AND CONTROL OF TRAFFIC MAY BE SUBJECT TO CHANGE AS DEEMED NECESSARY BY THE DEPARTMENT.

NOTE: THE LANE CONFIGURATION AND STORAGE LENGTH DEDICATED TO BE FINALIZED BASED ON THE DETAILED TRAFFIC ANALYSIS RESULTS.

LEGEND

- C — Denotes Construction Limits In Cuts
- F — Denotes Construction Limits In Fills
- Denotes Temporary Easement
- Denotes Permanent Easement
- Denotes Demolition of Pavement
- Denotes Proposed Pavement
- Denotes Mill & Overlay Pavement
- Denotes Existing Bridge
- Denotes Proposed Bridge

NOTE: See Sheet IM for Incidental Legend

REFERENCES
(PROFILES, DETAIL & DRAINAGE DESCRIPTION SHEETS, ETC.)

Jones Branch Connector Profile 8A

THESE PLANS ARE UNFINISHED AND UNAPPROVED AND ARE NOT TO BE USED FOR ANY TYPE OF CONSTRUCTION OR THE ACQUISITION OF RIGHT OF WAY.

SCALE 0 25' 50'

PLAN NO.	PROJECT	SHEET NO.
	8102 - 029 - 065	NR-9

PROJECT MANAGER Sung S. Shin, PE (703) 877-5753
DESIGN SUPERVISED BY John M. McDowell, PE (703) 246-0028 (RKK)
DESIGNED BY Rummel, Klepper & Kahl, LLP (703) 246-0028

SIGHT DISTANCE EXHIBIT

REVISED	STATE	STATE ROUTE	STATE PROJECT	SHEET NO.
	VA.		8102 - 029 - 065	NR-10

DESIGN FEATURES RELATING TO CONSTRUCTION OR TO REGULATION AND CONTROL OF TRAFFIC MAY BE SUBJECT TO CHANGE AS DEEMED NECESSARY BY THE DEPARTMENT.

NOTE: THE LANE CONFIGURATION AND STORAGE LENGTH DEDICATED TO BE FINALIZED BASED ON THE DETAILED TRAFFIC ANALYSIS RESULTS.

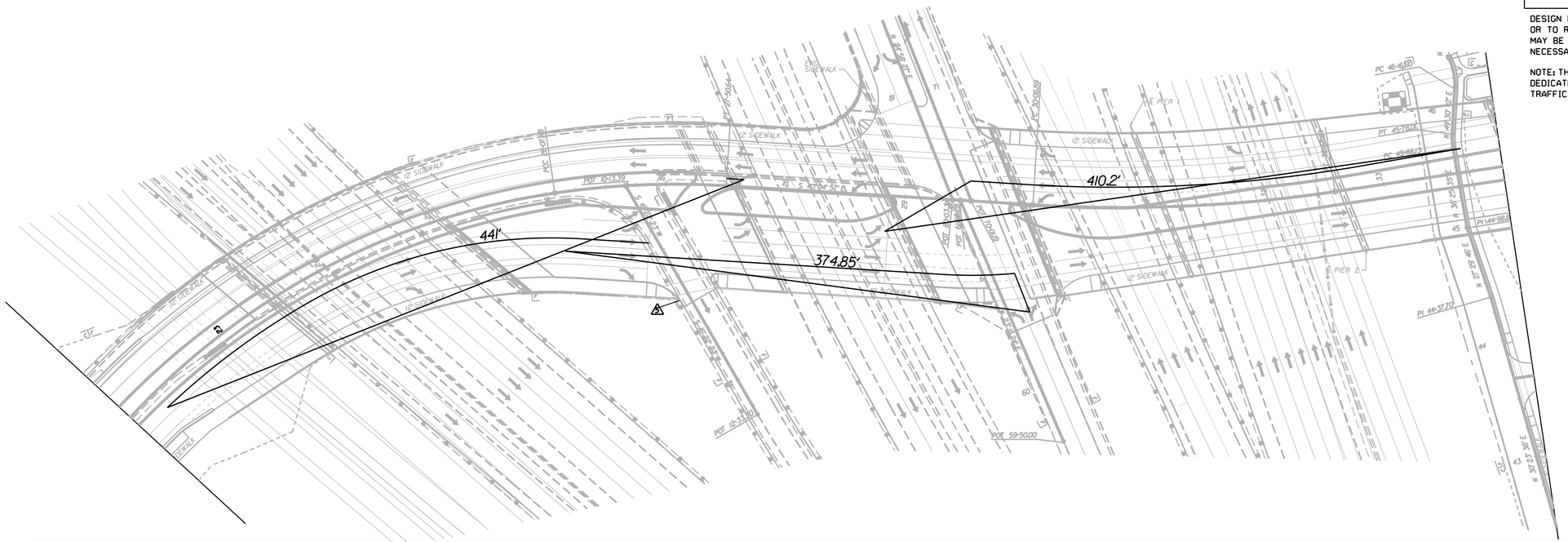

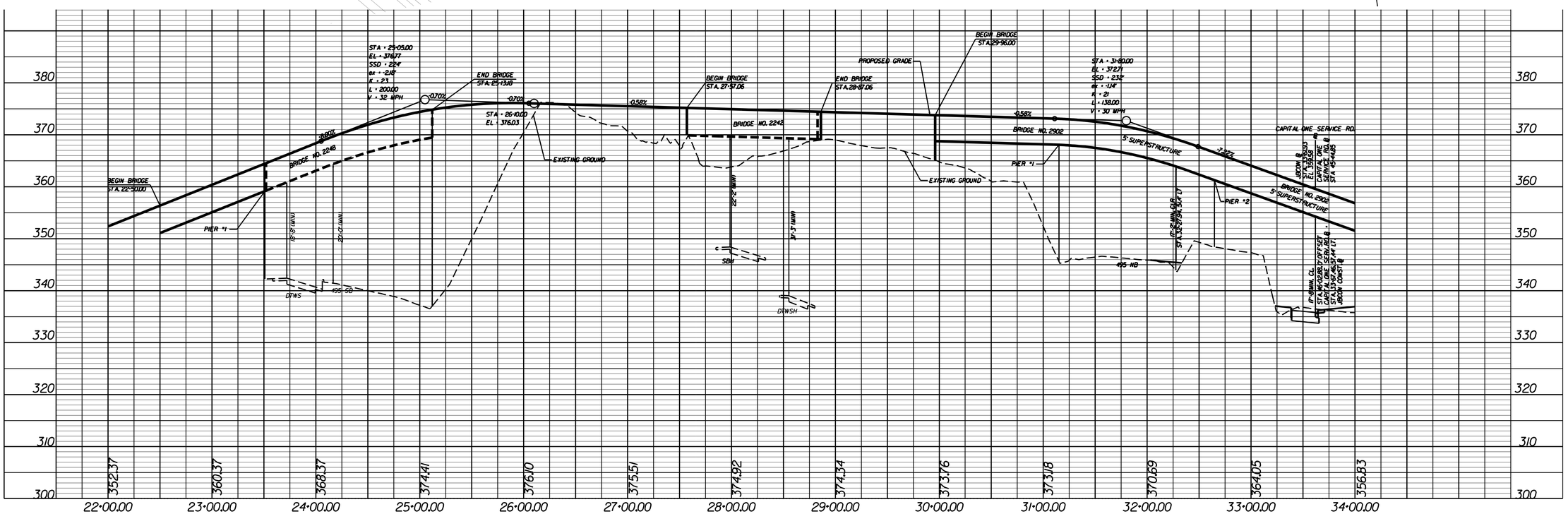

PLAN NO.	PROJECT	SHEET NO.
	8102 - 029 - 065	NR-10

PROJECT MANAGER Sung S. Shin, PE (703) 877-5753
DESIGN SUPERVISED BY John M. McDowell, PE (703) 246-0028 (RKK)
DESIGNED BY Rummel, Klepper & Kahl, LLP (703) 246-0028

REVISED	STATE	STATE ROUTE	STATE PROJECT	SHEET NO
	VA.		8102 - 029 - 065	NR-11

JBEWN RAMP EXHIBIT

DESIGN FEATURES RELATING TO CONSTRUCTION OR TO REGULATION AND CONTROL OF TRAFFIC MAY BE SUBJECT TO CHANGE AS DEEMED NECESSARY BY THE DEPARTMENT.

NOTE: THE LANE CONFIGURATION AND STORAGE LENGTH DEDICATED TO BE FINALIZED BASED ON THE DETAILED TRAFFIC ANALYSIS RESULTS.

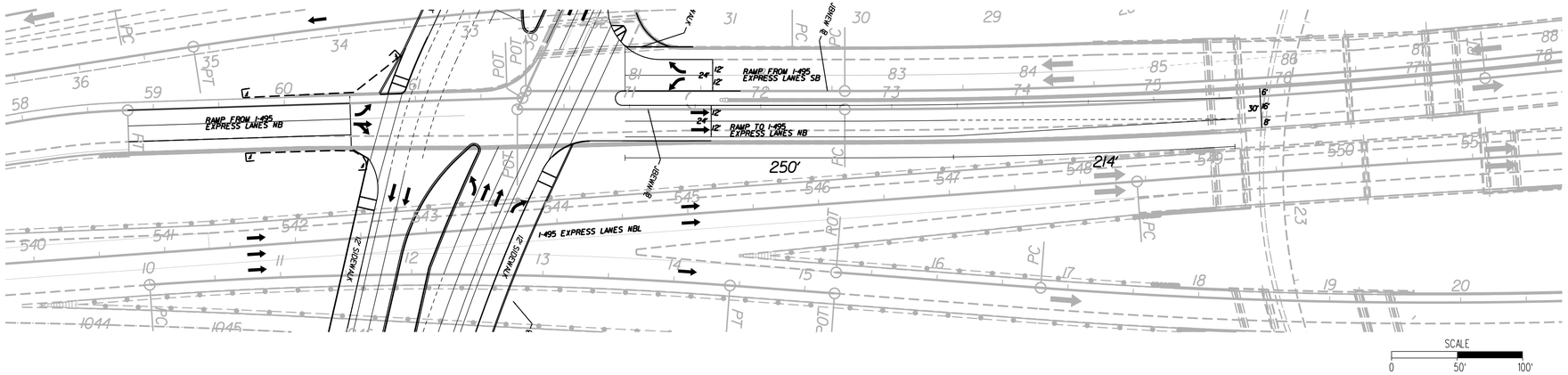

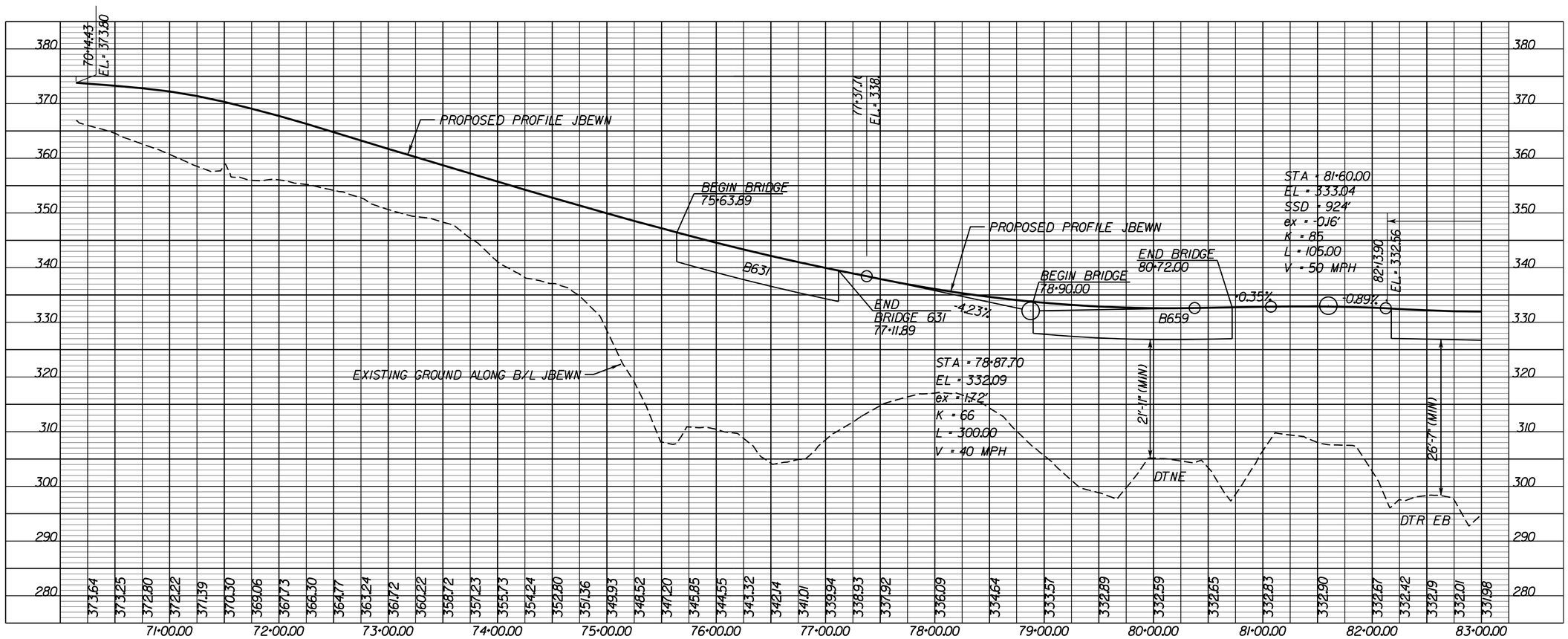

PLAN NO.	PROJECT	SHEET NO.
	8102 - 029 - 065	NR-11

PROJECT MANAGER Sung S.Shin, PE (703) 877-5753
DESIGN SUPERVISED BY John M.McDowell, PE (703) 246-0028 (RKK)
DESIGNED BY Rummel, Klepper & Kahl, LLP (703) 246-0028

REVISED	STATE	STATE ROUTE	STATE PROJECT	SHEET NO
	VA.		8102 - 029 - 065	IA

DESIGN FEATURES RELATING TO CONSTRUCTION OR TO REGULATION AND CONTROL OF TRAFFIC MAY BE SUBJECT TO CHANGE AS DEEMED NECESSARY BY THE DEPARTMENT.

NOTE: THE LANE CONFIGURATION AND STORAGE LENGTH DEDICATED TO BE FINALIZED BASED ON THE DETAILED TRAFFIC ANALYSIS RESULTS.

LOCATION MAP

PROJECT NO. 8102-029-065 UPC 103907

JONES BRANCH CONNECTOR

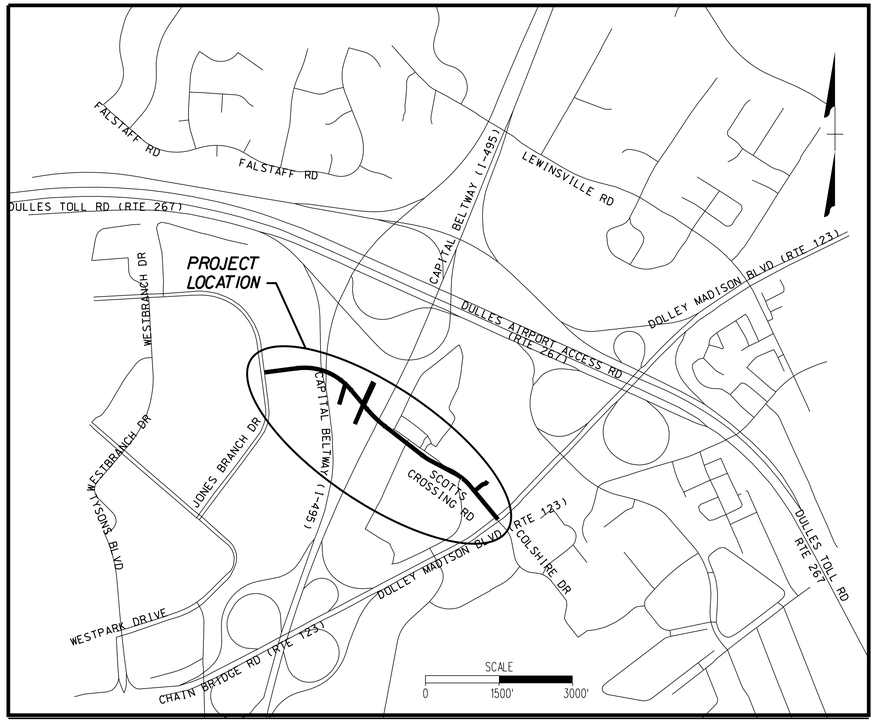

THESE PLANS ARE UNFINISHED AND UNAPPROVED AND ARE NOT TO BE USED FOR ANY TYPE OF CONSTRUCTION OR THE ACQUISITION OF RIGHT OF WAY.

PLAN NO.	PROJECT	SHEET NO.
	8102 - 029 - 065	IA

PROJECT MANAGER Sung S. Shin, PE (703) 877-5753
DESIGN SUPERVISED BY John M. McDowell, PE (703) 246-0028 (RKK)
DESIGNED BY Rummel, Klepper & Kahl, LLP (703) 246-0028

REVISED	STATE	STATE ROUTE	STATE PROJECT	SHEET NO
	VA.		8102 - 029 - 065	IB

INDEX OF SHEETS

DESIGN FEATURES RELATING TO CONSTRUCTION OR TO REGULATION AND CONTROL OF TRAFFIC MAY BE SUBJECT TO CHANGE AS DEEMED NECESSARY BY THE DEPARTMENT.

NOTE: THE LANE CONFIGURATION AND STORAGE LENGTH DEDICATED TO BE FINALIZED BASED ON THE DETAILED TRAFFIC ANALYSIS RESULTS.

SHEET NO.	DESCRIPTION	STATIONS
I	TITLE SHEET	
IA	LOCATION MAP	
IB	INDEX OF SHEETS	
IC	RIGHT OF WAY DATA SHEET	
ID	REVISION DATA SHEET	
IE	NOT USED	
IF	SURVEY DATA SHEET	
IG(1) thru IG(5)	CONSTRUCTION ALIGNMENT DATA SHEETS	
IH	NOT USED	
IJ	'95 CADD LEVEL STRUCTURE	
IK	TRANSPORTATION MANAGEMENT PLAN	
IL(1) thru IL(7)	MAINTENANCE OF TRAFFIC & SEQUENCE OF CONSTRUCTION PLANS	
IM	LEGEND	
2	GENERAL NOTES	
2A(1) thru 2A(7)	TYPICAL SECTIONS AND DETAILS	
3	PLAN SHEET	JONES BRANCH CONNECTOR STA. 17+94.27 TO 21+00
3A	PROFILE SHEET	JONES BRANCH CONNECTOR STA. 17+94.27 TO 21+00
4	PLAN SHEET	JONES BRANCH CONNECTOR STA. 21+00 TO 27+00
4A	PROFILE SHEET	JONES BRANCH CONNECTOR STA. 21+00 TO 27+00
5	PLAN SHEET	JONES BRANCH CONNECTOR STA. 27+00 TO 33+00
		JBWS RAMP STA. 10+13.39 TO 12+33.30
		JBSEW RAMP STA. 59+50.00 TO 61+68.28
		JBNEW RAMP STA. 80+03.31 TO 82+56.83
		JBEWN RAMP STA. 70+01.19 TO 72+55.74
5A	PROFILE SHEET	JONES BRANCH CONNECTOR STA. 27+00 TO 33+00
5B	PROFILE SHEET	JBWS RAMP STA. 10+13.39 TO 12+33.30
5C	PROFILE SHEET	JBSEW RAMP STA. 59+50.00 TO 61+68.28
5D	PROFILE SHEET	JBNEW RAMP STA. 80+03.31 TO 82+56.83
5E	PROFILE SHEET	JBEWN RAMP STA. 70+01.19 TO 72+55.74
6	PLAN SHEET	JONES BRANCH CONNECTOR STA. 33+00 TO 39+00
		CAPITAL ONE SERVICE ROAD STA. 42+50 TO 46+43.24
		CAPITAL ONE DRIVE STA. 14+50.37 TO 20+00
		GATES OF MCLEAN STA. 10+00 TO 11+00
6(1)	PLAN SHEET	GATES OF MCLEAN STA. 11+00 TO 11+84.91
6(2)	PLAN SHEET	CAPITAL ONE SERVICE ROAD STA. 37+88.57 TO 42+50
6A	PROFILE SHEET	JONES BRANCH CONNECTOR STA. 33+00 TO 39+00
6B	PROFILE SHEET	CAPITAL ONE SERVICE ROAD STA. 37+88.57 TO 43+75
6C	PROFILE SHEET	CAPITAL ONE SERVICE ROAD STA. 43+75 TO 50+00
6D	PROFILE SHEET	CAPITAL ONE DRIVE STA. 14+62.47 TO 20+00
7	PLAN SHEET	JONES BRANCH CONNECTOR STA. 39+00 TO 45+00
7A	PROFILE SHEET	JONES BRANCH CONNECTOR STA. 39+00 TO 45+00
8	PLAN SHEET	JONES BRANCH CONNECTOR STA. 45+00 TO 47+73.54
8A	PROFILE SHEET	JONES BRANCH CONNECTOR STA. 45+00 TO 47+73.54
9	ENTRANCE PROFILES	
10 thru 14	NOT USED	
15(1) thru 15(9)	CONCEPTUAL LANDSCAPE PLANS	
X-1 thru X-26	JONES BRANCH CONNECTOR CROSS SECTIONS	
X-27 thru X-33	CAPITAL ONE SERVICE ROAD CROSS SECTIONS	
X-34 thru X-36	CAPITAL ONE DRIVE CROSS SECTIONS	
B-1 TO B-26	BRIDGE PLAN SHEETS	

THESE PLANS ARE UNFINISHED AND UNAPPROVED AND ARE NOT TO BE USED FOR ANY TYPE OF CONSTRUCTION OR THE ACQUISITION OF RIGHT OF WAY.

PLAN NO.	PROJECT	SHEET NO.
	8102 - 029 - 065	IB

PROJECT MANAGER Sung S. Shin, PE (703) 877-5753
DESIGN SUPERVISED BY John M. McDowell, PE (703) 246-0028 (RKK)
DESIGNED BY Rummel, Klepper & Kahl, LLP (703) 246-0028

REVISED	STATE	STATE ROUTE	STATE PROJECT	SHEET NO
	VA.		8102 - 029 - 065	IC

DESIGN FEATURES RELATING TO CONSTRUCTION OR TO REGULATION AND CONTROL OF TRAFFIC MAY BE SUBJECT TO CHANGE AS DEEMED NECESSARY BY THE DEPARTMENT.

NOTE: THE LANE CONFIGURATION AND STORAGE LENGTH DEDICATED TO BE FINALIZED BASED ON THE DETAILED TRAFFIC ANALYSIS RESULTS.

PRELIMINARY
RIGHT OF WAY DATA SHEET

PARCEL NO.	LANDOWNER	SHEET NO.	AREA														
			TOTAL		FEE TAKING		PRESCRIPTIVE R/W		FEE REMAINDER		EASEMENTS						PROFFERS
											PERMANENT DRAINAGE EASEMENT		PERMANENT EASEMENT		TEMPORARY CONSTRUCTION EASEMENT		
			SQ.FEET	ACRES	SQ.FEET	ACRES	SQ.FEET	ACRES	SQ.FEET	ACRES	SQ.FEET	ACRES	SQ.FEET	ACRES	SQ.FEET	ACRES	YES / NO
001	RP MRP TYSONS LLC	3,4	263,279	6.0441	2,793.08	0.0641			260,485.92	5.9799					12,850.41	0.2950	YES*
002	TYSONS PARK PLACE II LLC	3,4	172,648	3.9635	1378.51	0.0316			171,269.49	3.9318					6,031.94	0.1385	NO
003	GATES OF MCLEAN	5,6(1)	914,446	20.9928					914,446	20.9928					33,461.73	0.7682	NO
004	CAPITAL ONE BANK	6(1),6(2)	1,141,884	26.2140	77005.29	1.7678			1,064,878.71	24.4463			63,332.55	1.4539	74,198.97	1.7034	YES
005	CLEVELAND 1820 DOLLY MADISON LLC	7	48,260	1.1079					48,260	1.1079					242.97	0.0056	NO
006	CLEVELAND 1820 DOLLY MADISON LLC	7,8	285,013	6.5430	688.49	0.0158			284,324.51	6.5272					4,173.53	0.0958	NO
007	BOARD OF SUPERVISORS OF FAIRFAX COUNTY, VIRGINIA	8	25,820	0.5927	234.03	0.0054			25,585.97	0.5874					683.21	0.0157	YES**

* PARTIAL
** INTERAGENCY TRANSFER

THESE PLANS ARE UNFINISHED AND UNAPPROVED AND ARE NOT TO BE USED FOR ANY TYPE OF CONSTRUCTION OR THE ACQUISITION OF RIGHT OF WAY.

PLAN NO.	PROJECT	SHEET NO.
	8102 - 029 - 065	IC

PROJECT MANAGER Sung S. Shin, PE (703) 877-5753
DESIGN SUPERVISED BY John M. McDowell, PE (703) 246-0028 (RKK)
DESIGNED BY Rummel, Klepper & Kahl, LLP (703) 246-0028

REVISION DATA SHEET

REVISED	STATE	STATE ROUTE	STATE PROJECT	SHEET NO.
	VA.			ID

DESIGN FEATURES RELATING TO CONSTRUCTION OR TO REGULATION AND CONTROL OF TRAFFIC MAY BE SUBJECT TO CHANGE AS DEEMED NECESSARY BY THE DEPARTMENT.

NOTE: THE LANE CONFIGURATION AND STORAGE LENGTH DEDICATED TO BE FINALIZED BASED ON THE DETAILED TRAFFIC ANALYSIS RESULTS.

THESE PLANS ARE UNFINISHED AND UNAPPROVED AND ARE NOT TO BE USED FOR ANY TYPE OF CONSTRUCTION OR THE ACQUISITION OF RIGHT OF WAY.

PLAN NO.	PROJECT	SHEET NO.
		ID

PROJECT MANAGER Sung S. Shin, PE (703) 877-5753
DESIGN SUPERVISED BY John M. McDowell, PE (703) 246-0028 (RKK)
DESIGNED BY Rummel, Klepper & Kahl, LLP (703) 246-0028

REVISED	STATE	STATE ROUTE	STATE PROJECT	SHEET NO
	VA.		8102 - 029 - 065	IF

DESIGN FEATURES RELATING TO CONSTRUCTION OR TO REGULATION AND CONTROL OF TRAFFIC MAY BE SUBJECT TO CHANGE AS DEEMED NECESSARY BY THE DEPARTMENT.

NOTE: THE LANE CONFIGURATION AND STORAGE LENGTH DEDICATED TO BE FINALIZED BASED ON THE DETAILED TRAFFIC ANALYSIS RESULTS.

Note: To Convert Va. State Plane Coordinates NAD 83 Metric Values to Va. D. O. T. Project Coordinates.
1. Reduce the Eastings 2.5 Million Meters and the South and North Zone Northings by 1 and 2 Million Respectively.
2. Multiply by the U. S. Survey Foot (3.28083333333).
3. Multiply These Values by the Combined Scale and Elevation Factor (1.00006) for this County.
A Reverse of this Procedure will Transform VDOT Project Coordinates to NAD 83 Values.

SURVEY DATA SHEET

District : Northern Virginia
County : Fairfax
From : The Terminus Of Scotts Crossing Road
To : The Intersection Of Dolly Madison And Scotts Crossing Road
Horizontal Datum Based On NAD83
Vertical Datum Based On NAVD88
Survey By : Rice Associates
Operator : Rice Associates
Date : 04 - 16 - 2012
Scale : 1" = 25'
UPC# : N/A

SURVEY ALIGNMENT

POINT ID.	STATION	BEARING	PROJECT COORDINATES NORTH (Y)	EAST (X)
	Scotts Crossing Road (Route 8102) - Survey Baseline			
POT	100+00.00		462,451.3870	3,646,175.4480
		S 62° 24' 43" E		
POT	114+76.43		461,767.6340	3,647,484.0120
		S 54° 45' 46" E		
POT	119+66.24		461,485.0357	3,647,884.0704
		S 49° 00' 19" E		
POT	129+86.75		460,815.5910	3,648,654.3220
		S 11° 09' 18" E		
POT	135+00.51		460,311.5390	3,648,753.7150

BENCH MARK REFERENCE: Levels Based on NAVD 1988 Datum

B.M. Description:	Bench Mark Location:	Elev.:
Rod & Cap	PI Sta. 100+00.00 Scotts Crossing Road (Route 8102) Survey Baseline	323.96'
PK Nail	PI Sta. 114+76.43 Scotts Crossing Road (Route 8102) Survey Baseline	335.72'
PK Nail	PI Sta. 119+66.24 Scotts Crossing Road (Route 8102) Survey Baseline	324.64'
Rod & Cap	PI Sta. 129+86.75 Scotts Crossing Road (Route 8102) Survey Baseline	316.13'
Rod & Cap	PI Sta. 135+00.51 Scotts Crossing Road (Route 8102) Survey Baseline	329.67'

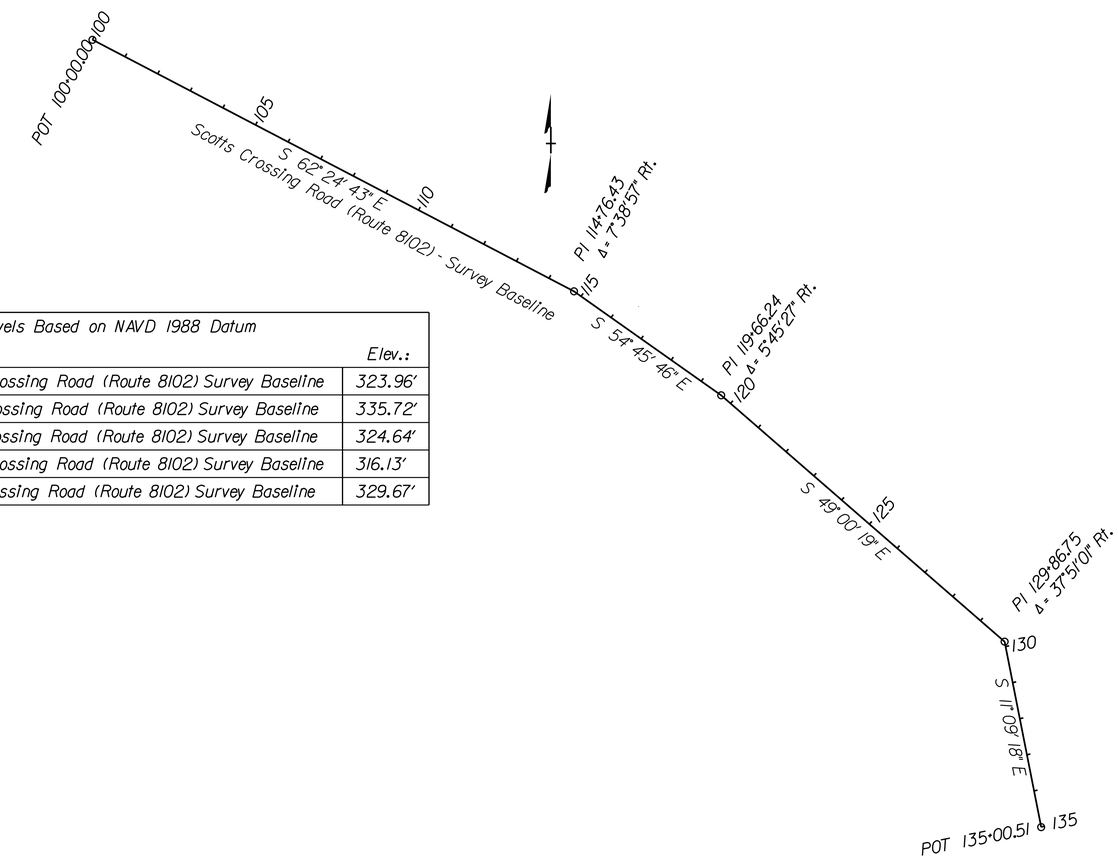

E-1 Approx. Location Ex. 15' City Of Falls Church Water Main Esmt. DB 4621 PG 25

E-2 Approx. Location Ex. 8' City Of Falls Church Water Main Esmt. DB 2844 PG 287

E-3 Ex. 15' City Of Falls Church Waterline Esmt. DB 10151 PG 1176

E-4 Ex. 24' Ingress / Egress Esmt. DB 9674 PG 622

E-5 Ex. 12' Emergency Access Esmt. DB 9674 PG 622

E-6 Approx. Location Of Ex. 15' Vepco Esmt. DB 9876 PG 1733

E-7 Ex. 10' Sanitary Sewer Esmt. DB 9674 PG 622

E-8 Ex. Sight Distance Esmt. DB 9674 PG 622

E-9 Approx. Location Of Ex. 15' Vepco Esmt. DB 9876 PG 1733

E-10 Ex. 59' Ingress / Egress Esmt. DB 11964 PG 1011

E-11 Ex. 10' Sanitary Sewer Esmt. DB 11964 PG 1011

E-12 Ex. 10' Sanitary Sewer Esmt. DB 11599 PG 668

E-13 Ex. 15' Storm Drain Esmt. DB 9673 PG 590 DB 9789 PG 768

E-14 Ex. 10' Sanitary Sewer Esmt. DB 11622 PG 1331

E-15 Approx. Location Ex. 25' Sanitary Sewer Esmt. DB 2586 PG 180

E-16 Ex. 20' Storm Drain Esmt. DB 9673 PG 590

E-17 Ex. Esmt. For Verizon Virginia DB 20515 PG 568 DB 20770 PG 131

E-18 Ex. Esmt. For Dominion Virginia Power DB 20515 PG 568 DB 20770 PG 131

E-19 Ex. Esmt. For MCI Metro Access Transmission Services Of Virginia DB 20515 PG 568 DB 20770 PG 131

E-20 Ex. Grading And Temporary Construction Esmt. DB 11772 PG 1025

E-21 Ex. Temp. Bore Pit Esmt. DB 20515 PG 568 DB 20770 PG 131

E-22 Ex. Floodplain And Storm Drain Esmt. DB 9674 PG 622 DB 9789 PG 757

E-23 Ex. Grading And Temporary Construction Esmt. DB 11772 PG 942

E-24 Ex. Storm Drainage Esmt. DB 11772 PG 942

THESE PLANS ARE UNFINISHED AND UNAPPROVED AND ARE NOT TO BE USED FOR ANY TYPE OF CONSTRUCTION OR THE ACQUISITION OF RIGHT OF WAY.

SCALE 0 200' 400'

PLAN NO.	PROJECT	SHEET NO.
	8102 - 029 - 065	IF

PROJECT MANAGER Sung S. Shin, PE (703) 877-5753
DESIGN SUPERVISED BY John M. McDowell, PE (703) 246-0028 (RKK)
DESIGNED BY Rummel, Klepper & Kahl, LLP (703) 246-0028

CONSTRUCTION ALIGNMENT DATA SHEET

Horizontal Datum Based On NAD83
Vertical Datum Based On NAVD88
Surveyed In VDOT Project Coordinates

REVISED	STATE	STATE ROUTE	STATE PROJECT	SHEET NO
	VA.		8102 - 029 - 065	IG(1)

Rummel, Klepper & Kahl, LLP
Fairfax, Virginia
ROADWAY ENGINEER

DESIGN FEATURES RELATING TO CONSTRUCTION OR TO REGULATION AND CONTROL OF TRAFFIC MAY BE SUBJECT TO CHANGE AS DEEMED NECESSARY BY THE DEPARTMENT.

NOTE: THE LANE CONFIGURATION AND STORAGE LENGTH DEDICATED TO BE FINALIZED BASED ON THE DETAILED TRAFFIC ANALYSIS RESULTS.

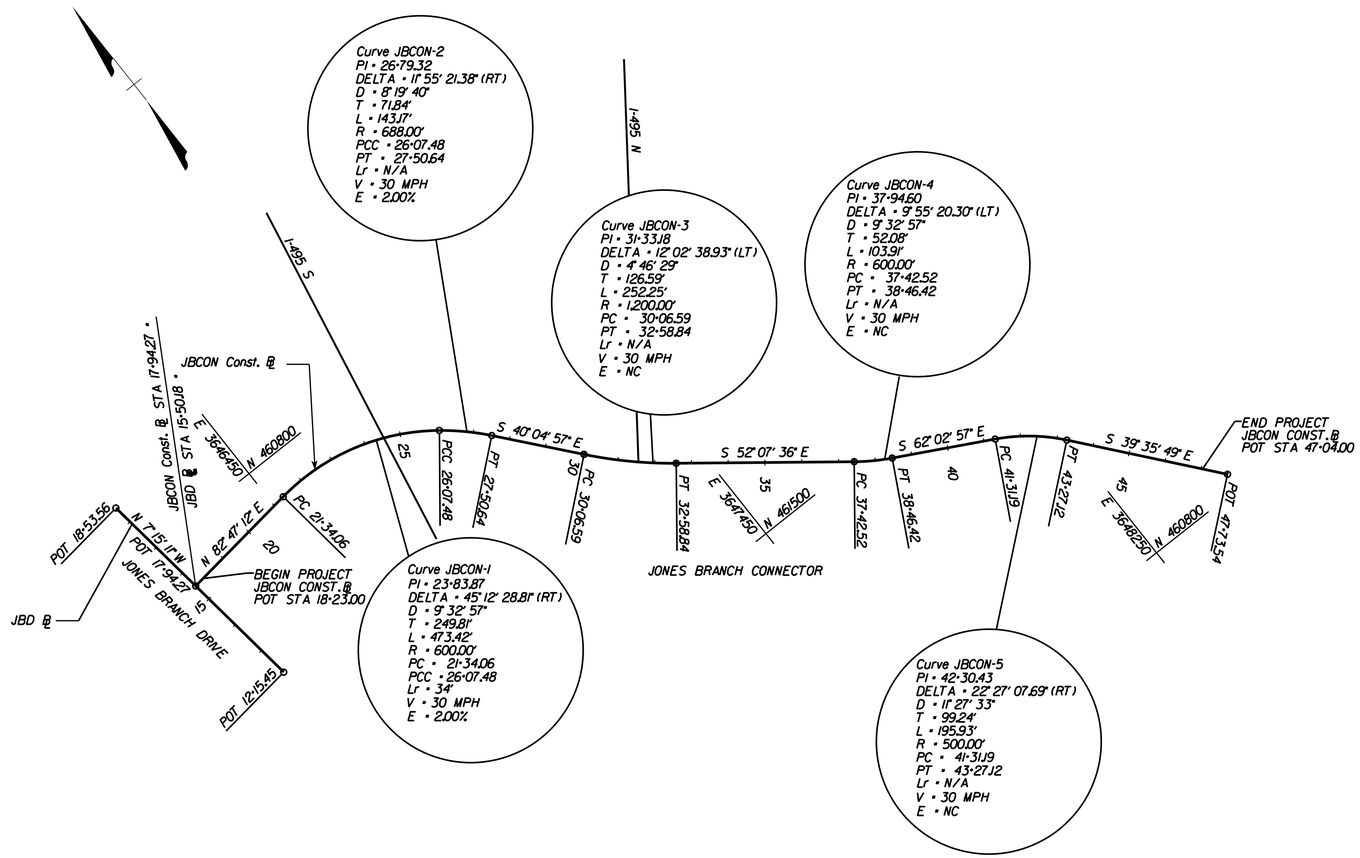

HORIZONTAL ALIGNMENT DATA FOR JONES BRANCH CONNECTOR

Location	Station	Point	Northing	Easting	Bearing
Jones Branch Con.	17+94.27	POT	462,350.57	3,646,146.84	N 82° 47' 12.37" E
Jones Branch Con.	21+34.06	PC	462,393.23	3,646,483.95	N 82° 47' 12.37" E
Jones Branch Con.	23+83.87	PI	462,424.60	3,646,731.77	
Jones Branch Con.	26+07.48	PCC	462,270.82	3,646,928.64	S 50° 00' 18.83" E
Jones Branch Con.	26+07.48	PCC	462,270.82	3,646,928.64	S 50° 00' 18.83" E
Jones Branch Con.	26+79.32	PI	462,226.59	3,646,985.25	
Jones Branch Con.	27+50.64	PT	462,171.63	3,647,031.51	S 40° 04' 57.45" E
Jones Branch Con.	30+06.59	PC	461,975.80	3,647,196.32	S 40° 04' 57.45" E
Jones Branch Con.	31+33.18	PI	461,878.94	3,647,277.83	
Jones Branch Con.	32+58.84	PT	461,801.22	3,647,377.76	S 52° 07' 36.37" E
Jones Branch Con.	37+42.52	PC	461,504.29	3,647,759.55	S 52° 07' 36.37" E
Jones Branch Con.	37+94.60	PI	461,472.31	3,647,800.67	
Jones Branch Con.	38+46.42	PT	461,447.90	3,647,846.67	S 62° 02' 56.67" E
Jones Branch Con.	41+31.19	PC	461,314.43	3,648,098.22	S 62° 02' 56.67" E
Jones Branch Con.	42+30.43	PI	461,267.91	3,648,185.88	
Jones Branch Con.	43+27.12	PT	461,191.44	3,648,249.14	S 39° 35' 48.98" E
Jones Branch Con.	47+04.00	EP	460,901.04	3,648,489.35	S 39° 35' 48.98" E
Jones Branch Con.	47+73.54	POT	460,847.45	3,648,533.68	S 39° 35' 48.98" E

HORIZONTAL ALIGNMENT DATA FOR JONES BRANCH DRIVE

Location	Station	Point	Northing	Easting	Bearing
Jones Branch Dr	12+15.45	POT	462,018.52	3,646,189.10	N 07° 15' 11.22" W
Jones Branch Dr	18+53.56	POT	462,651.52	3,646,108.54	N 07° 15' 11.22" W

THESE PLANS ARE UNFINISHED AND UNAPPROVED AND ARE NOT TO BE USED FOR ANY TYPE OF CONSTRUCTION OR THE ACQUISITION OF RIGHT OF WAY.

SCALE
0 200' 400'

PLAN NO.	PROJECT	SHEET NO.
	8102 - 029 - 065	IG(1)

PROJECT MANAGER Sung S. Shin, PE (703) 877-5753
DESIGN SUPERVISED BY John M. McDowell, PE (703) 246-0028 (RKK)
DESIGNED BY Rummel, Klepper & Kahl, LLP (703) 246-0028

REVISED	STATE	STATE ROUTE	STATE PROJECT	SHEET NO
	VA.		8102 - 029 - 065	IG(2)

Rummel, Klepper & Kahl, LLP
Fairfax, Virginia
ROADWAY ENGINEER

DESIGN FEATURES RELATING TO CONSTRUCTION OR TO REGULATION AND CONTROL OF TRAFFIC MAY BE SUBJECT TO CHANGE AS DEEMED NECESSARY BY THE DEPARTMENT.

NOTE: THE LANE CONFIGURATION AND STORAGE LENGTH DEDICATED TO BE FINALIZED BASED ON THE DETAILED TRAFFIC ANALYSIS RESULTS.

CONSTRUCTION ALIGNMENT DATA SHEET

Horizontal Datum Based On NAD83
Vertical Datum Based On NAVD88
Surveyed In VDOT Project Coordinates

JBCE ℄ IS THE GEOMETRIC ALIGNMENT FOR THE INSIDE EDGE OF EB THROUGH LANES.

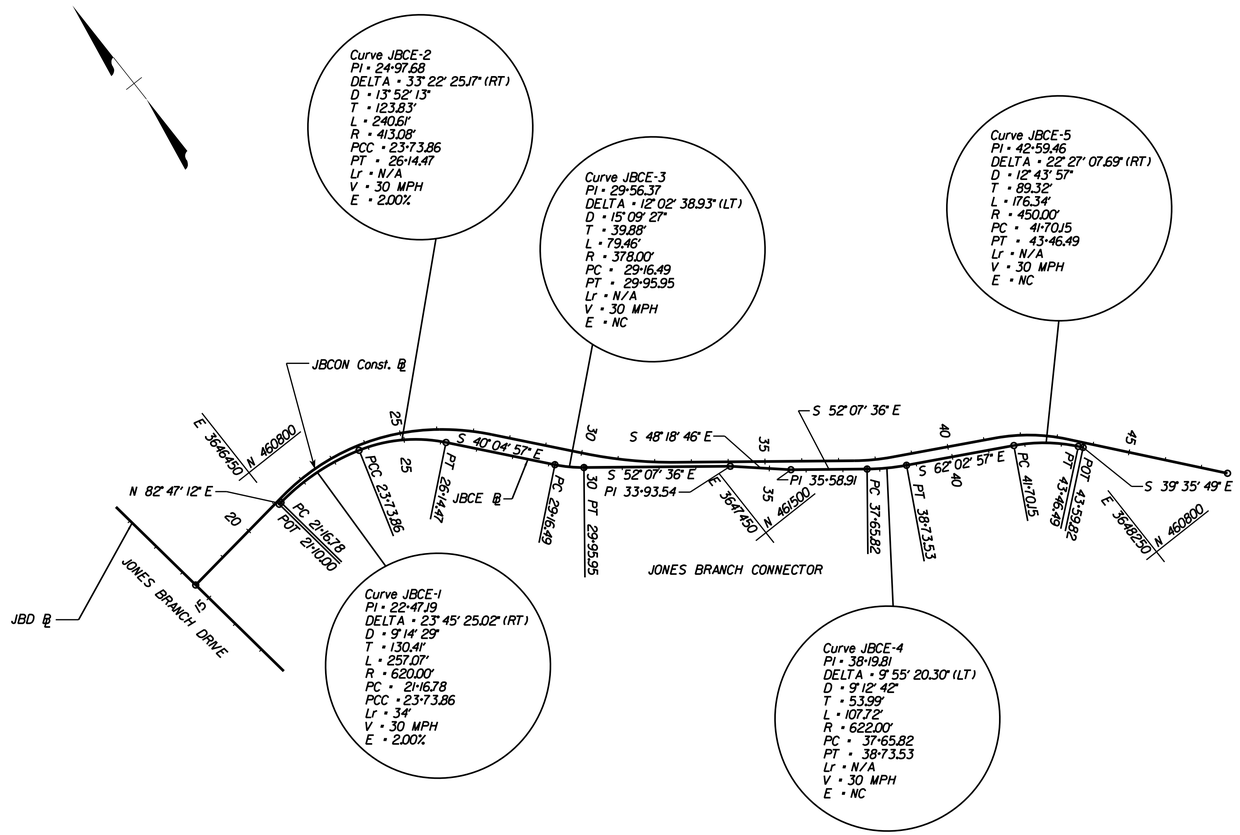

HORIZONTAL ALIGNMENT DATA FOR EB JONES BRANCH CONNECTOR (JBCE ℄)

Location	Station	Point	Northing	Easting	Bearing
Jones Branch Con. EB	21+00.00	POT	462,381.78	3,646,461.14	N 82° 47' 12.37" E
Jones Branch Con. EB	21+16.78	PC	462,382.63	3,646,467.87	N 82° 47' 12.37" E
Jones Branch Con. EB	22+47.19	PI	462,399.00	3,646,597.25	
Jones Branch Con. EB	23+73.86	PCC	462,361.87	3,646,722.26	S 73° 27' 22.62" E
Jones Branch Con. EB	23+73.86	PCC	462,361.87	3,646,722.26	S 73° 27' 22.62" E
Jones Branch Con. EB	24+97.68	PI	462,326.61	3,646,840.96	
Jones Branch Con. EB	26+14.47	PT	462,231.87	3,646,920.69	S 40° 04' 57.45" E
Jones Branch Con. EB	29+16.49	PC	462,000.78	3,647,115.16	S 40° 04' 57.45" E
Jones Branch Con. EB	29+56.37	PI	461,970.27	3,647,140.84	
Jones Branch Con. EB	29+95.95	PT	461,945.79	3,647,172.32	S 52° 07' 36.37" E
Jones Branch Con. EB	33+93.54	PI	461,701.71	3,647,486.17	S 48° 18' 45.71" E
Jones Branch Con. EB	35+58.91	PI	461,591.73	3,647,609.66	S 52° 07' 36.37" E
Jones Branch Con. EB	37+65.82	PC	461,464.70	3,647,772.99	S 52° 07' 36.37" E
Jones Branch Con. EB	38+19.81	PI	461,431.55	3,647,815.61	
Jones Branch Con. EB	38+73.53	PT	461,406.25	3,647,863.30	S 62° 02' 56.67" E
Jones Branch Con. EB	41+70.15	PC	461,267.22	3,648,125.32	S 62° 02' 56.67" E
Jones Branch Con. EB	42+59.46	PI	461,225.36	3,648,204.21	
Jones Branch Con. EB	43+46.49	PT	461,156.53	3,648,204.21	S 39° 35' 48.98" E
Jones Branch Con. EB	43+59.82	POT	461,146.26	3,648,269.64	S 39° 35' 48.98" E

THESE PLANS ARE UNFINISHED AND UNAPPROVED AND ARE NOT TO BE USED FOR ANY TYPE OF CONSTRUCTION OR THE ACQUISITION OF RIGHT OF WAY.

SCALE
0 200' 400'

PLAN NO.	PROJECT	SHEET NO.
	8102 - 029 - 065	IG(2)

PROJECT MANAGER Sung S. Shin, PE (703) 877-5753
DESIGN SUPERVISED BY John M. McDowell, PE (703) 246-0028 (RKK)
DESIGNED BY Rummel, Klepper & Kahl, LLP (703) 246-0028

CONSTRUCTION ALIGNMENT DATA SHEET

Horizontal Datum Based On NAD83
Vertical Datum Based On NAVD88
Surveyed In VDOT Project Coordinates

REVISED	STATE	STATE ROUTE	STATE PROJECT	SHEET NO
	VA.		8102 - 029 - 065	IG(3)

Rummel, Klepper & Kahl, LLP
Fairfax, Virginia
ROADWAY ENGINEER

DESIGN FEATURES RELATING TO CONSTRUCTION OR TO REGULATION AND CONTROL OF TRAFFIC MAY BE SUBJECT TO CHANGE AS DEEMED NECESSARY BY THE DEPARTMENT.

NOTE: THE LANE CONFIGURATION AND STORAGE LENGTH DEDICATED TO BE FINALIZED BASED ON THE DETAILED TRAFFIC ANALYSIS RESULTS.

JBCW ℄ IS THE GEOMETRIC ALIGNMENT FOR THE INSIDE EDGE OF WB THROUGH LANES.

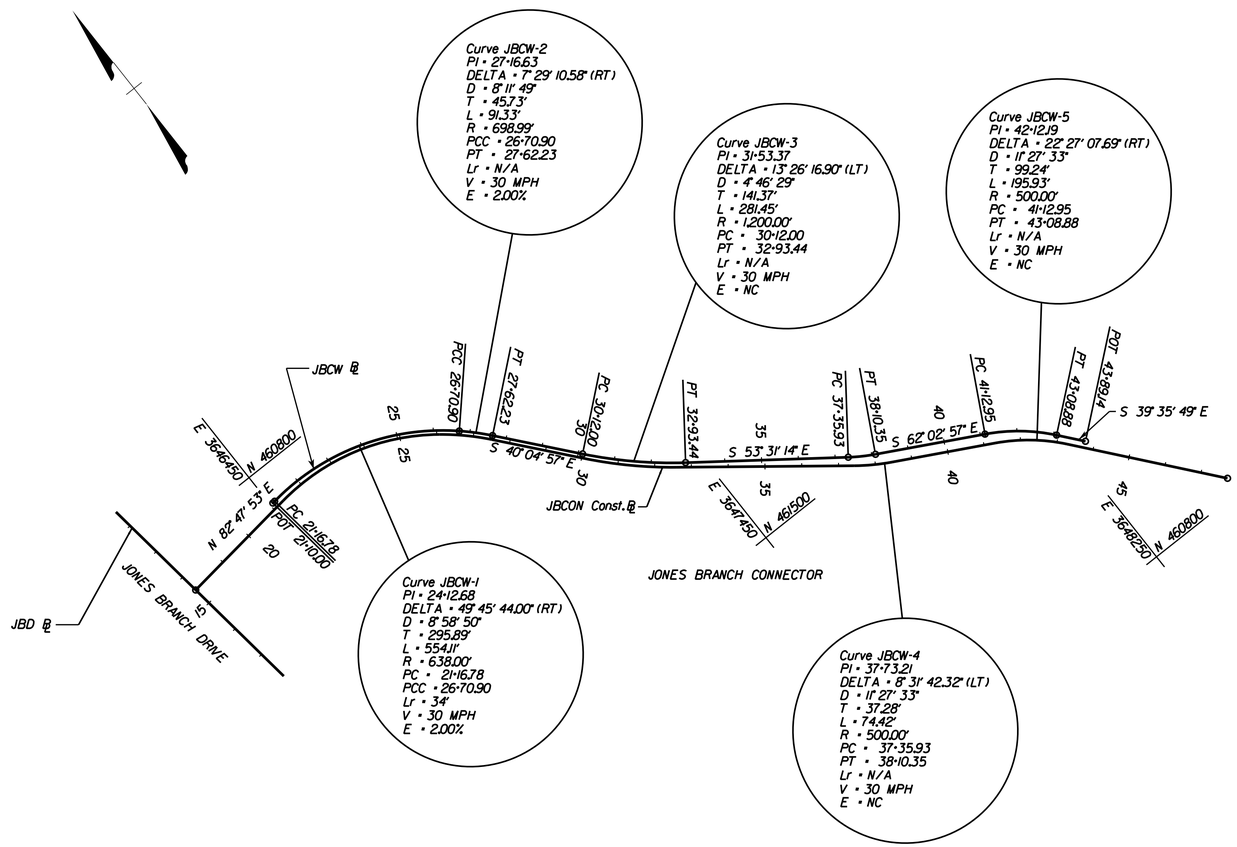

HORIZONTAL ALIGNMENT DATA FOR WB JONES BRANCH CONNECTOR (JBCW ℄)

Location	Station	Point	Northing	Easting	Bearing
Jones Branch Con.WB	21+10.00	POT	462,405.59	3,646,458.13	N 82° 47' 53.43" E
Jones Branch Con.WB	21+16.78	PC	462,406.44	3,646,464.86	N 82° 47' 53.43" E
Jones Branch Con.WB	24+12.68	PI	462,444.19	3,646,758.33	
Jones Branch Con.WB	26+70.90	PCC	462,244.55	3,646,976.73	S 47° 34' 08.03" E
Jones Branch Con.WB	26+70.90	PCC	462,244.55	3,646,976.73	S 47° 34' 08.03" E
Jones Branch Con.WB	27+16.63	PI	462,213.70	3,647,010.48	
Jones Branch Con.WB	27+62.23	PT	462,178.71	3,647,039.93	S 40° 04' 57.45" E
Jones Branch Con.WB	30+12.00	PC	461,987.60	3,647,200.76	S 40° 04' 57.45" E
Jones Branch Con.WB	31+53.37	PI	461,879.44	3,647,291.78	
Jones Branch Con.WB	32+93.44	PT	461,795.39	3,647,405.46	S 53° 31' 14.35" E
Jones Branch Con.WB	37+35.93	PC	461,532.32	3,647,761.24	S 53° 31' 14.35" E
Jones Branch Con.WB	37+73.21	PI	461,510.15	3,647,791.22	
Jones Branch Con.WB	38+10.35	PT	461,492.68	3,647,824.15	S 62° 02' 56.67" E
Jones Branch Con.WB	41+12.95	PC	461,350.85	3,648,091.45	S 62° 02' 56.67" E
Jones Branch Con.WB	42+12.19	PI	461,304.33	3,648,179.12	
Jones Branch Con.WB	43+08.88	PT	461,227.86	3,648,242.37	S 39° 35' 48.98" E
Jones Branch Con.WB	43+89.14	POT	461,166.02	3,648,293.53	S 39° 35' 48.98" E

THESE PLANS ARE UNFINISHED AND UNAPPROVED AND ARE NOT TO BE USED FOR ANY TYPE OF CONSTRUCTION OR THE ACQUISITION OF RIGHT OF WAY.

SCALE
0 200' 400'

PLAN NO.	PROJECT	SHEET NO.
	8102 - 029 - 065	IG(3)

PROJECT MANAGER Sung S. Shin, PE (703) 877-5753
DESIGN SUPERVISED BY John M. McDowell, PE (703) 246-0028 (RKK)
DESIGNED BY Rummel, Klepper & Kahl, LLP (703) 246-0028

CONSTRUCTION ALIGNMENT DATA SHEET

REVISED	STATE	STATE ROUTE	STATE PROJECT	SHEET NO
	VA.		8102 - 029 - 065	IG(4)

Rummel, Klepper & Kahl, LLP
Fairfax, Virginia
ROADWAY ENGINEER

DESIGN FEATURES RELATING TO CONSTRUCTION OR TO REGULATION AND CONTROL OF TRAFFIC MAY BE SUBJECT TO CHANGE AS DEEMED NECESSARY BY THE DEPARTMENT.

NOTE: THE LANE CONFIGURATION AND STORAGE LENGTH DEDICATED TO BE FINALIZED BASED ON THE DETAILED TRAFFIC ANALYSIS RESULTS.

Horizontal Datum Based On NAD83
Vertical Datum Based On NAVD88
Surveyed In VDOT Project Coordinates

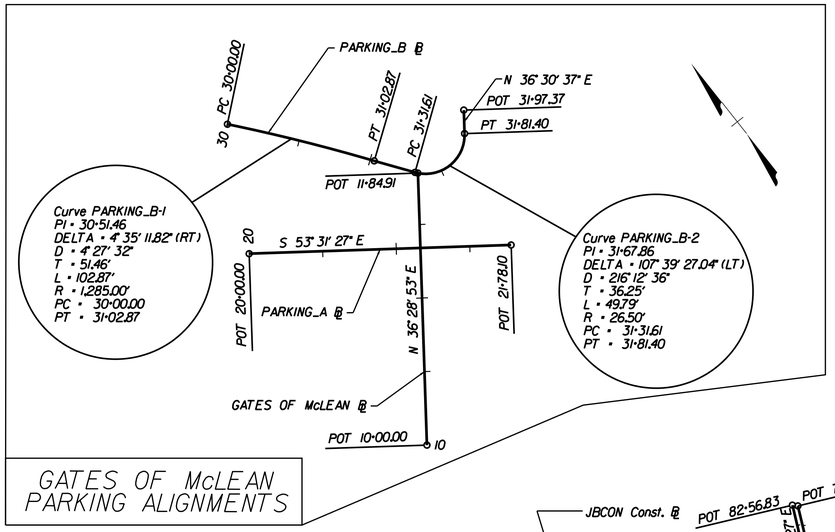

GATES OF McLEAN PARKING ALIGNMENTS

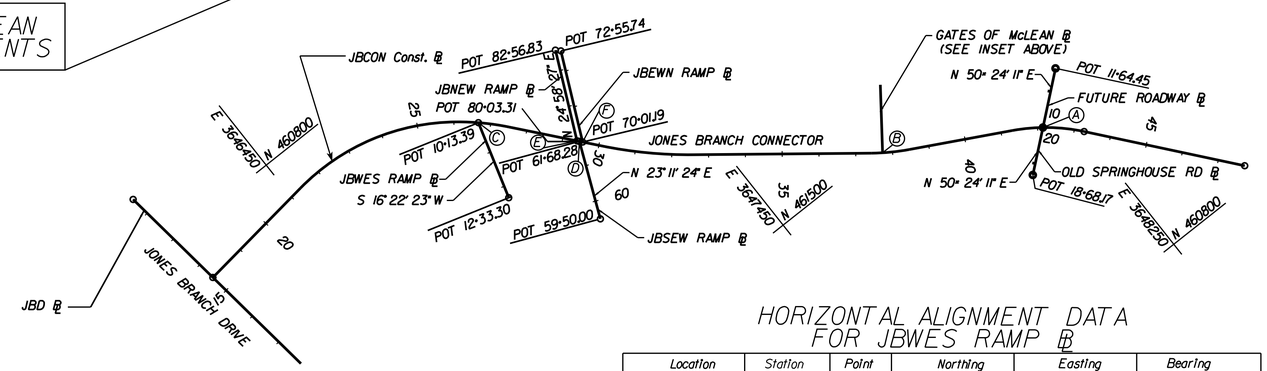

HORIZONTAL ALIGNMENT DATA FOR OLD SPRINGHOUSE RD ℄

Location	Station	Point	Northing	Easting	Bearing
Springhouse	18+68.17	POT	461,185.42	3,648,066.64	N 50° 24' 11.02" E
Springhouse	20+00.00	POT	461,269.45	3,648,168.22	

HORIZONTAL ALIGNMENT DATA FOR FUTURE ROADWAY ℄

Location	Station	Point	Northing	Easting	Bearing
DAAR	10+00.00	POT	461,269.45	3,648,168.22	N 50° 24' 11.02" E
DAAR	11+64.45	POT	461,374.26	3,648,294.93	

HORIZONTAL ALIGNMENT DATA FOR GATES OF MCLEAN ℄

Location	Station	Point	Northing	Easting	Bearing
Gates of McLean	10+00.00	POT	461,484.48	3,647,786.55	N 34° 40' 32.10" E
Gates of McLean	11+39.92	POT	461,599.54	3,647,866.15	

HORIZONTAL ALIGNMENT DATA FOR JBWES RAMP ℄

Location	Station	Point	Northing	Easting	Bearing
JBWES	10+13.39	POT	462,232.35	3,646,973.74	S 16° 22' 23.11" W
JBWES	12+33.30	POT	462,021.35	3,646,911.75	

HORIZONTAL ALIGNMENT DATA FOR JBSEW RAMP ℄

Location	Station	Point	Northing	Easting	Bearing
JBSEW	59+50.00	POT	461,821.58	3,647,071.28	N 23° 11' 24.09" E
JBSEW	61+68.28	POT	461,374.26	3,648,294.93	

HORIZONTAL ALIGNMENT DATA FOR JBNEW RAMP ℄

Location	Station	Point	Northing	Easting	Bearing
JBNEW	80+03.31	POT	462,027.07	3,647,153.16	N 24° 58' 26.53" E
JBNEW	82+56.83	POT	462,256.89	3,647,260.20	

HORIZONTAL ALIGNMENT DATA FOR JBEWN RAMP ℄

Location	Station	Point	Northing	Easting	Bearing
JBEWN	70+01.19	POT	462,015.26	3,647,163.10	N 24° 58' 26.53" E
JBEWN	72+55.74	POT	462,246.00	3,647,270.57	

HORIZONTAL ALIGNMENT DATA FOR GATES OF MCLEAN PARKING_A ℄

Location	Station	Point	Northing	Easting	Bearing
Parking_A	20+00.00	POT	461,663.12	3,647,770.17	S 53° 31' 26.76" E
Parking_A	21+78.10	POT	461,557.24	3,647,913.38	

HORIZONTAL ALIGNMENT DATA FOR GATES OF MCLEAN PARKING_B ℄

Location	Station	Point	Northing	Easting	Bearing
Parking_B	30+00.00	POT	461,741.24	3,647,813.19	S 39° 54' 10.60" E
Parking_B	30+00.00	PC	461,741.24	3,647,813.19	S 39° 54' 10.60" E
Parking_B	30+51.46	PI	461,701.76	3,647,846.20	
Parking_B	31+02.87	PT	461,659.77	3,647,875.95	S 35° 18' 58.78" E
Parking_B	31+31.61	PC	461,636.47	3,647,892.78	S 35° 49' 56.26" E
Parking_B	31+67.86	PI	461,607.08	3,647,914.00	
Parking_B	11+39.92	PT	461,636.22	3,647,914.26	N 36° 30' 36.70" E
Parking_B	11+39.92	POT	461,599.54	3,647,866.15	N 36° 30' 36.70" E

TIE STATIONS

Ⓐ JBCON CONST ℄ STA 42+14.48 = FUTURE ROADWAY ℄ STA 10+00.00
OLD SPRINGHOUSE RD ℄ STA 20+00.00

Ⓑ JBCON CONST ℄ STA 37+76.00 = GATES OF McLEAN ℄ STA 10+00.00

Ⓒ JBCON CONST ℄ STA 26+66.48 = JBWES RAMP ℄ STA 10+13.39

Ⓓ JBCON CONST ℄ STA 29+45.90 = JBSEW RAMP ℄ STA 61+68.28

Ⓔ JBCON CONST ℄ STA 29+39.57 = JBNEW RAMP ℄ STA 80+03.31

Ⓕ JBCON CONST ℄ STA 29+55.01 = JBEWN RAMP ℄ STA 70+01.19

THESE PLANS ARE UNFINISHED AND UNAPPROVED AND ARE NOT TO BE USED FOR ANY TYPE OF CONSTRUCTION OR THE ACQUISITION OF RIGHT OF WAY.

SCALE
0 200' 400'

PLAN NO.	PROJECT	SHEET NO.
	8102 - 029 - 065	IG(4)

PROJECT MANAGER Sung S. Shin, PE (703) 877-5753
DESIGN SUPERVISED BY John M. McDowell, PE (703) 246-0028 (RKK)
DESIGN BY Rummel, Klepper & Kahl, LLP (703) 246-0028

CONSTRUCTION ALIGNMENT DATA SHEET

Horizontal Datum Based On NAD83
Vertical Datum Based On NAVD88
Surveyed In VDOT Project Coordinates

REVISED	STATE	STATE ROUTE	STATE PROJECT	SHEET NO
	VA.		8102 - 029 - 065	IG(5)

Rummel, Klepper & Kahl, LLP
Fairfax, Virginia
ROADWAY ENGINEER

DESIGN FEATURES RELATING TO CONSTRUCTION OR TO REGULATION AND CONTROL OF TRAFFIC MAY BE SUBJECT TO CHANGE AS DEEMED NECESSARY BY THE DEPARTMENT.

NOTE: THE LANE CONFIGURATION AND STORAGE LENGTH DEDICATED TO BE FINALIZED BASED ON THE DETAILED TRAFFIC ANALYSIS RESULTS.

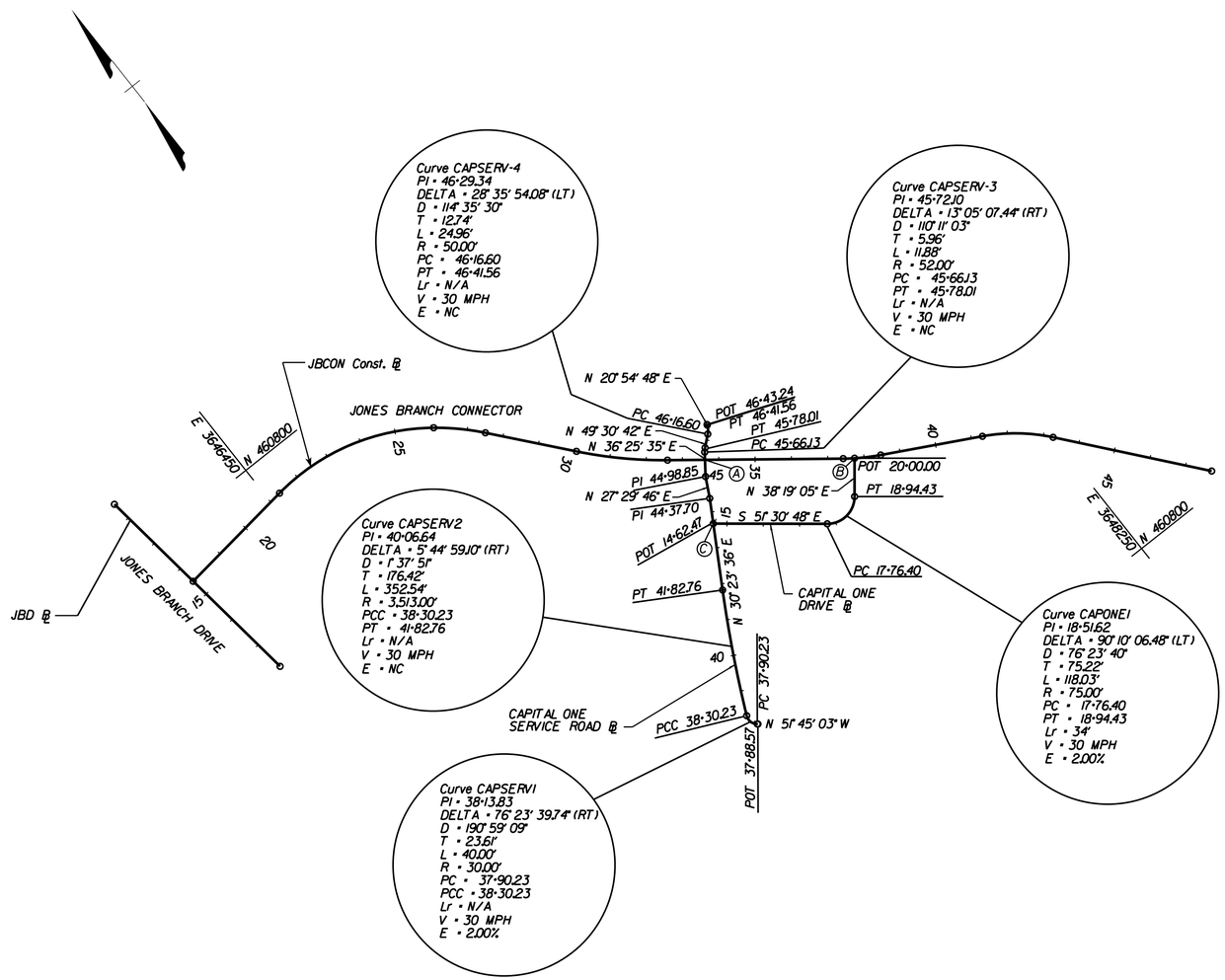

HORIZONTAL ALIGNMENT DATA FOR CAPITAL ONE SERVICE ROAD ℄

Location	Station	Point	Northing	Easting	Bearing
CAP. ONE. SERV.RD	37+88.57	POT	461,077.17	3,647,121.79	N 51° 45' 03.32" W
CAP. ONE. SERV.RD	37+90.23	PC	461,078.19	3,647,120.48	N 51° 45' 03.32" W
CAP. ONE. SERV.RD	38+13.83	PI	461,092.81	3,647,101.95	
CAP. ONE. SERV.RD	38+30.23	PCC	461,114.26	3,647,111.79	N 34° 38' 36.42" E
CAP. ONE. SERV.RD	38+30.23	PCC	461,114.26	3,647,111.79	N 34° 38' 36.42" E
CAP. ONE. SERV.RD	40+06.64	PI	461,274.61	3,647,185.35	
CAP. ONE. SERV.RD	41+82.76	PT	461,426.78	3,647,274.60	N 30° 23' 35.52" E
CAP. ONE. SERV.RD	44+37.70	PI	461,646.68	3,647,403.58	N 27° 29' 46.24" E
CAP. ONE. SERV.RD	44+98.85	PI	461,700.92	3,647,431.81	N 36° 25' 34.58" E
CAP. ONE. SERV.RD	45+66.13	PC	461,755.06	3,647,471.77	N 36° 25' 34.58" E
CAP. ONE. SERV.RD	45+72.10	PI	461,759.86	3,647,475.31	
CAP. ONE. SERV.RD	45+78.01	PT	461,763.73	3,647,513.61	N 49° 30' 42.02" E
CAP. ONE. SERV.RD	46+16.60	PC	461,788.79	3,647,509.19	N 49° 30' 42.02" E
CAP. ONE. SERV.RD	46+29.34	PI	461,797.07	3,647,518.89	
CAP. ONE. SERV.RD	46+41.56	PT	461,808.97	3,647,523.44	N 20° 54' 47.94" E
CAP. ONE. SERV.RD	46+43.24	POT	461,810.54	3,647,524.04	N 20° 54' 47.94" E

HORIZONTAL ALIGNMENT DATA FOR CAPITAL ONE DRIVE ℄

Location	Station	Point	Northing	Easting	Bearing
CAPITAL ONE DR	14+62.47	POT	461,586.04	3,647,368.03	S 51° 30' 48.29" E
CAPITAL ONE DR	17+76.40	PC	461,390.70	3,647,613.76	S 51° 30' 48.29" E
CAPITAL ONE DR	18+51.62	PI	461,343.89	3,647,672.64	
CAPITAL ONE DR	18+94.43	PT	461,402.91	3,647,719.28	N 38 19' 05.23" E
CAPITAL ONE DR	20+00.00	POT	461,485.74	3,647,784.73	N 38 19' 05.23" E

TIE STATIONS

(A) JBCON CONST ℄ STA 33+61.93 = CAP ONE SERV RD ℄ STA 44+55.15

(B) JBCON CONST ℄ STA 37+73.79 = CAPITAL ONE DR ℄ STA 20+00.00

(C) CAP ONE SERV RD ℄ STA 43+67.43 = CAPITAL ONE DR ℄ 14+62.47

THESE PLANS ARE UNFINISHED AND UNAPPROVED AND ARE NOT TO BE USED FOR ANY TYPE OF CONSTRUCTION OR THE ACQUISITION OF RIGHT OF WAY.

SCALE
0 200' 400'

PLAN NO.	PROJECT	SHEET NO.
	8102 - 029 - 065	IG(5)

PROJECT MANAGER Sung S. Shin, PE (703) 877-5753
DESIGN SUPERVISED BY John M. McDowell, PE (703) 246-0028 (RKK)
DESIGNED BY Rummel, Klepper & Kahl, LLP (703) 246-0028

'95 CADD LEVEL STRUCTURE

REVISED	STATE	STATE ROUTE	STATE PROJECT	SHEET NO
	VA.		8102 - 029 - 065	IJ

SURVEY

LEVEL 1	CENTERLINE, TRAVERSE, CONTROL STATION
LEVEL 2	BRIDGES
LEVEL 3	EDGE OF PAVEMENT, GRAVEL, CONCRETE, ASPHALT PARKING LOT
LEVEL 4	CURB AND GUTTER
LEVEL 5	CURB & CONCRETE ISLANDS
LEVEL 6	PAVED & GRAVEL SHOULDER
LEVEL 7	SIDEWALK (ALONG ROADS); WHEELCHAIR RAMPS
LEVEL 8	BUILDINGS, PORCHES, DECKS, PATIOS & SWIMMING POOLS
LEVEL 9	WALKS (AROUND HOUSES & BUILDINGS)
LEVEL 10	STEPS
LEVEL 11	FENCES & GATES
LEVEL 12	WOOD LINE, TREES, SHRUBS, HEDGEROWS
LEVEL 13	RETAINING WALLS
LEVEL 14	CONCRETE SLABS, BALLARDS, COLUMNS, SIGNS, POSTS, GAS ISLANDS & PLAYSETS
LEVEL 15	ABOVE GROUND TANKS, DUMPSTERS, PROPANE TANKS
LEVEL 16	GUARDRAIL & JERSEY BARRIER
LEVEL 17	BODIES OF WATER, STREAMS, LAKES, ETC.
LEVEL 18	PAVED DITCHES, RIPRAP
LEVEL 19	DRAINAGE ITEMS DAMS, ENDWALLS & ENDSECTIONS CATCH BASINS, DROP INLETS & DI MANHOLES CULVERT PIPES
LEVEL 20	ALL RAILROAD ITEMS, RAILROAD TIES
LEVEL 21	SEPTIC TANKS, DRAIN FIELDS, WELLS
LEVEL 22	CEMETERY LOCATION & GRAVES
LEVEL 23	RIGHT OF WAY AND RIGHT OF WAY MONUMENTS
LEVEL 24	PROPERTY LINES, TEMPORARY EASEMENT, PERMANENT EASEMENT, PROPERTY PINS
LEVEL 25	STATE, COUNTY AND CITY BOUNDARY LINES
LEVEL 26	UTILITY EASEMENTS
LEVEL 27	WELANDS
LEVEL 28	GAS PUMPS, GAS TANKS, FILLER CAPS, MONITORING WELLS, VENT PIPES, ETC.
LEVEL 29	MINE INFORMATION
LEVEL 30	EXISTING NOISE BARRIER WALLS
LEVEL 31-60	ANNOTATION FOR LEVELS 1 - 30
LEVEL 61	TRAFFIC SIGNES IN R/W, BASE PLAN SHEET, NORTH ARROW, SCALE BAR, ETC.
LEVEL 62	GRID AND LABELS; ELEVATION TICKS, PROJECT NOTES
LEVEL 63	NOT ASSIGNED

NOTE: Survey Utility Information will be in a separate file. Digital Terrain Model Information will be in separate files.

DESIGN

LEVEL 1	BASELINE & SUB-TANGENTS
LEVEL 2	BRIDGES
LEVEL 3	EDGE OF PAVEMENT & PRIVATE ENTRANCES
LEVEL 4	CURB AND GUTTER
LEVEL 5	CURB
LEVEL 6	PAVED SHOULDER
LEVEL 7	SIDEWALK AND/OR BICYCLE TRAIL
LEVEL 8	NOT ASSIGNED
LEVEL 9	NOT ASSIGNED
LEVEL 10	STEPS
LEVEL 11	FENCES
LEVEL 12	DIRECTIONAL ARROWS, PAVEMENT STRIPING & FLUSH MEDIAN DELINEATION
LEVEL 13	RETAINING WALLS
LEVEL 14	CONCRETE SLABS, COLUMNS, SIGNS, POSTS
LEVEL 15	NOT ASSIGNED
LEVEL 16	GUARDRAIL & JERSEY BARRIER
LEVEL 17	NOT ASSIGNED
LEVEL 18	PAVED DITCHES
LEVEL 19	RESERVED FOR MISC. DRAIN. ITEMS TO BE PLACED BY ROAD DESIGNERS
LEVEL 20	RAILROADS, ETC.
LEVEL 21	NOT ASSIGNED
LEVEL 22	LIMITS OF CONSTRUCTION
LEVEL 23	RIGHT-OF-WAY, TEMP. & PERM. EASEMENTS
LEVEL 24	NOT ASSIGNED
LEVEL 25-29	NOT ASSIGNED
LEVEL 30	PROPOSED NOISE BARRIER WALLS & ANNOTATION
LEVEL 31-54	ANNOTATION FOR LEVELS 1 - 24
LEVEL 55-60	NOT ASSIGNED
LEVEL 61	BASE PLAN SHEET, SCALE BAR, NORTH ARROW, MATCH LINES, SEALING & SIGNING BLOCKS
LEVEL 62	NOT ASSIGNED
LEVEL 63	NOT ASSIGNED

HYDRAULICS - DRAINAGE

LEVEL 1	PIPES FROM 4" TO 42" (CUSTOM LINE STYLES)
LEVEL 2	PIPES 48" AND LARGER (CUSTOM LINE STYLE)
LEVEL 3	STANDARD BOX CULVERTS LC-0, WT-5
LEVEL 4	ENDWALLS (CELLS)
LEVEL 5	END SECTIONS (CELLS)
LEVEL 6	DITCHES AND FLUMES WT-4, LC-0 (CUSTOM LINE STYLE)
LEVEL 7	ENERGY DISSIPATORS, PIPE SPILLOUT AND SPRING BOXES (CELLS)
LEVEL 8	MANHOLES AND JUNCTION BOXES (CELLS)
LEVEL 9	DROP INLETS DI-1, DI-5 AND DI-9 SERIES (CELLS)
LEVEL 10	DROP INLETS DI-2 SERIES (CELLS)
LEVEL 11	DROP INLETS DI-3 SERIES (CELLS)
LEVEL 12	DROP INLETS DI-4 SERIES (CELLS)
LEVEL 13	DROP INLETS DI-7 SERIES (CELLS)
LEVEL 14	DROP INLETS DI-10 SERIES (CELLS)
LEVEL 15	DROP INLETS DI-11 AND DI-13 SERIES (CELLS)
LEVEL 16	DROP INLETS DI-12 SERIES (CELLS)
LEVEL 17	DROP INLETS DI-14 SERIES (CELLS)
LEVEL 18	SPECIAL DESIGN ITEMS (ENDWALLS, INLETS, ETC.)
LEVEL 19	UNDERDRAINS (CD-1 & 2, UD-1, UD-2, ETC.) (CUSTOM LINE STYLE)
LEVEL 20	UNDERDRAIN OUTLET PIPE AND EW-12 ENDSECTIONS (CUSTOM LINE STYLE & CELLS)
LEVEL 21	STONE & OUTLET PROTECTION (EC-1, RIPRAP CHANNEL, ETC.) (CELLS)
LEVEL 22	SWM BASIN ITEMS (BASIN, RISERS, WEIRS, ETC.)
LEVEL 23	SWM BASIN (BASELINE/ALIGNMENT)
LEVEL 24	SWM BASIN (PLAN VIEW/CONTOURS)
LEVEL 25	SWM BASIN (MISCELLANEOUS/ITEMS)
LEVEL 26	SWM BASIN (DESCRIPTIONS/NOTES)
LEVEL 27	TYPICAL DITCH DETAILS
LEVEL 28-30	NOT ASSIGNED
LEVEL 31-60	ANNOTATION FOR LEVELS 1 - 30 NOTE: ALL DRAINAGE STRUCTURE LABELS ON LEVEL 31
LEVEL 61	BASE PLAN SHEET, SCALE BAR, NORTH ARROW, MATCH LINES, ETC. WT - 5, LC - 0
LEVEL 62	NOT ASSIGNED
LEVEL 63	PROJECT NOTES

EROSION & SEDIMENT CONTROL

LEVEL 1	PHASE I - EROSION CONTROL ITEMS (TFB, TSF, TURB. CURTAIN) (CUSTOM LINE STYLE)
LEVEL 2	PHASE I - EROSION CONTROL DITCH ITEMS (EC-2, EC-3, ETC.)(CUSTOM LINE STYLE)
LEVEL 3	PHASE I - EROSION CONTROL STONE (EC-1, RIPRAP, CHECK DAMS) (CELLS)
LEVEL 4	PHASE I - EROSION CONTROL ITEMS (SEDIMENT TRAPS & BASINS)
LEVEL 5	PHASE I - EROSION CONTROL ITEMS (DIVERSION DIKES & DITCHES) (CUSTOM LINE STYLE)
LEVEL 6	PHASE I - EROSION CONTROL ITEMS (TEMPORARY DIVERSION CHANNELS) (CUSTOM LINE STYLE)
LEVEL 7	PHASE I - EROSION CONTROL ITEMS (MISCELLANEOUS DIVERSION ITEMS)
LEVEL 8	PHASE I - EROSION CONTROL ITEMS (BRUSH BARRIERS, LEVEL SPREADERS, ETC.)
LEVEL 9	PHASE I - MISCELLANEOUS EROSION CONTROL ITEMS
LEVEL 10	PHASE I - TEMPORARY DRAINAGE (PIPES) (CUSTOM LINE STYLE)
LEVEL 11	PHASE I - PROPOSED DRAINAGE (PIPES) (CUSTOM LINE STYLE)
LEVEL 12	PHASE I - PROPOSED DRAINAGE (SWM)
LEVEL 13	PHASE I - EXISTING CONTOURS (LC - 1, WT - 1)
LEVEL 14	PHASE I - PROPOSED CONTOURS
LEVEL 15	PHASE I - SYMBOLS, LEGEND AND NOTES
LEVEL 16	PHASE II - EROSION CONTROL ITEMS (TFB, TSF, TURB. CURTAIN) (CUSTOM LINE STYLE)
LEVEL 17	PHASE II - EROSION CONTROL DITCH ITEMS (EC-2, EC-3, ETC.)(CUSTOM LINE STYLE)
LEVEL 18	PHASE II - EROSION CONTROL STONE (EC-1, RIPRAP, CHECK DAMS) (CELLS)
LEVEL 19	PHASE II - EROSION CONTROL ITEMS (SEDIMENT TRAPS & BASINS)
LEVEL 20	PHASE II - EROSION CONTROL ITEMS (DIVERSION DIKES & DITCHES) (CUSTOM LINE STYLE)
LEVEL 21	PHASE II - EROSION CONTROL ITEMS (TEMPORARY DIVERSION CHANNELS) (CUSTOM LINE STYLE)
LEVEL 22	PHASE II - EROSION CONTROL ITEMS (MISCELLANEOUS DIVERSION ITEMS)
LEVEL 23	PHASE II - EROSION CONTROL ITEMS (BRUSH BARRIERS, LEVEL SPREADERS, ETC.)
LEVEL 24	PHASE II - MISCELLANEOUS EROSION CONTROL ITEMS
LEVEL 25	PHASE II - TEMPORARY DRAINAGE (PIPES) (CUSTOM LINE STYLE)
LEVEL 26	PHASE II - PROPOSED DRAINAGE (PIPES) (CUSTOM LINE STYLE)
LEVEL 27	PHASE II - PROPOSED DRAINAGE (SWM)
LEVEL 28	PHASE II - EXISTING CONTOURS (LC - 1, WT - 1)
LEVEL 29	PHASE II - PROPOSED CONTOURS
LEVEL 30	PHASE II - SYMBOLS, LEGEND AND NOTES
LEVEL 31-60	ANNOTATION FOR LEVELS 1 - 30
LEVEL 61	BASE PLAN SHEET, SCALE BAR, NORTH ARROW, ETC. WT - 5, LC - 0
LEVEL 62	NOT ASSIGNED
LEVEL 63	PROJECT NOTES

TRAFFIC ENGINEERING

LEVEL 1	PROPOSED AND EXISTING SIGNAL FACES & NUMBERS SIGN FACES & NUMBERS (Legend)
LEVEL 2	PROPOSED UNDERGROUND SIGNAL EQUIPMENT CONDUIT, JUNCTION BOXES, MANHOLES
LEVEL 3	UNDERGROUND EQUIPMENT LABELS CONDUIT, WIRE, JUNCTION BOXES
LEVEL 4	PROPOSED ABOVE GROUND MINOR SIGNAL EQUIPMENT SIGNS ON SPANWIRE, MAST ARMS, POLES, SIGNAL HEADS, PEDESTRIAN PUSHBUTTONS, ETC.
LEVEL 5	ABOVE GROUND EQUIPMENT LABELS SIGNAL POLE LABELS SIGNAL HEAD LABELS, SIGN LABELS, PHASE INFO, SIGNAL POLE DETAIL
LEVEL 6	PROPOSED LOOPS/VIDEO DETECTION ZONES LOOPS, VIDEO DETECTION ZONES, MICROLOOP PROBE
LEVEL 7	SIGNAL CHARTS COLOR SEQUENCE CHART, PHASING DIAGRAM, PREEMPTION DIAGRAM, TIMING CHART
LEVEL 8	OVERHEAD UTILITY HEIGHT INFORMATION
LEVEL 9	EXISTING UNDERGROUND SIGNAL EQUIPMENT CONDUIT, JUNCTION BOXES, MANHOLES
LEVEL 10	EXISTING ABOVE GROUND MINOR SIGNAL EQUIPMENT POLE, MAST ARM, SPAN WIRE, SIGNAL HEADS, PEDESTRIAN PUSHBUTTONS, CONTROLLER/CABINET&FOUNDATION, ETC.
LEVEL 11	EXISTING LOOPS/VIDEO DETECTION ZONES LOOPS, VIDEO DETECTION ZONES, MICROLOOP PROBES
LEVEL 12	EXISTING PAVEMENT MARKINGS (LONGITUDINAL)
LEVEL 13	EXISTING TRANSVERSE MARKINGS (STOP BARS & CROSSWALKS)
LEVEL 14	EXISTING HATCHING
LEVEL 15	EXISTING LETTERS/ARROWS/SYMBOLS
LEVEL 16	GUARDRAIL AND JERSEY BARRIER
LEVEL 17	PROPOSED PAVEMENT MARKINGS (LONGITUDINAL)
LEVEL 18	PROPOSED TRANSVERSE MARKINGS (STOP BARS & CROSSWALKS)
LEVEL 19	PROPOSED HATCHING
LEVEL 20	PROPOSED LETTERS/ARROWS/SYMBOLS
LEVEL 21	PAVEMENT MARKINGS LABELS
LEVEL 22	DIRECTIONAL ARROWS (LANE ARRANGEMENTS ARROWS)
LEVEL 23	EXISTING AND PROPOSED ROW PROPOSED R/W FOR TCD's, LABELS AND LEADERS
LEVEL 24	EXISTING SIGN LOCATIONS INCLUDING STRUCTURES (SYMBOLS)
LEVEL 25	EXISTING SIGN FACES & LEADERS EXISTING SIGN FACES, EXISTING SIGN LEADERS, 'X' FOR EXISTING SIGNS TO BE REMOVED
LEVEL 26	PROPOSED SIGN LOCATIONS, INCLUDING STRUCTURES (SYMBOLS)
LEVEL 27	PROPOSED SIGN FACES & LEADERS, PROPOSED SIGN FACES, PROPOSED SIGN LEADERS
LEVEL 28	SIGN NUMBER/CALL-OUTS PROPOSED SIGN CALL-OUT, EXISTING SIGN CALL-OUT
LEVEL 29	SIGN DETAIL SHEET
LEVEL 30	SIGN SCHEDULE SHEET
LEVEL 31	OVERHEAD SIGN SUPPORT DATA SUMMARY & NOTES
LEVEL 32	VA AND VIA STRUCTURE SHEET

DESIGN FEATURES RELATING TO CONSTRUCTION OR TO REGULATION AND CONTROL OF TRAFFIC MAY BE SUBJECT TO CHANGE AS DEEMED NECESSARY BY THE DEPARTMENT.

NOTE: THE LANE CONFIGURATION AND STORAGE LENGTH DEDICATED TO PROPOSED LEFT/RIGHT/ON BOTH SIDES. TRAFFIC ANALYSIS REPORT.

LEVEL 33	PROPOSED ABOVE GROUND EQUIPMENT LABELS, LUMINAIRES, SIGNS, ELECTRICAL SERVICE, CONTROL CENTER
LEVEL 34	PROPOSED UNDERGROUND EQUIPMENT CONDUIT, JUNCTION BOXES, FOUNDATIONS, DUCT CABLE
LEVEL 35	PROPOSED UNDER BRIDGE LIGHTING
LEVEL 36	LIGHTING LABELS POLE LOCATION LABEL, LUMINAIRE LABEL, CONDUIT/CABLE IDENTIFIER LABEL, EXIST. CONDUIT/CABLE IDENTIFIER LABLE
LEVEL 37	EXISTING ABOVE GROUND EQUIPMENT -- LIGHTING LUMINAIRES (INCLUDING UNDER BRIDGE), POLES, CONTROL CENTER, ELECTRICAL SERVICE, ARMS
LEVEL 38	EXISTING UNDERGROUND EQUIPMENT -- LIGHTING CONDUIT, JUNCTION BOXES, DUCT CABLE
LEVEL 39	SIGNAL LEGEND
LEVEL 40	SIGNAL POLE LEGEND
LEVEL 41	SIGNING LEGEND
LEVEL 42	PAVEMENT MARKING LEGEND
LEVEL 43	LIGHTING LEGEND
LEVEL 44	SUMMARY OF QUANTITIES
LEVEL 45	GENERAL NOTES & PLAN NOTES
LEVEL 46	LOCATION INFORMATION ROADWAY NAMES, BASELINE NAME, DIRECTIONAL ARROWS, DIRECTIONAL ARROW TEXT
LEVEL 47	DIMENSIONS, TERMINATORS
LEVEL 48	PROP. ABOVE GROUND MAJOR SIGNAL EQUIPMENT POLE - MAST ARM, COMBO MAST ARM, STRAIN, COMBO STRAIN, PF-2, PF-3 MAST ARM, SPAN WIRE, CONTROLLER/ CABINET & FOUNDATION, UTILITY POLES
LEVEL 49	EXIST. ABOVE GROUND MAJOR SIGNAL EQUIPMENT POLE - MAST ARM, COMBO MAST ARM, STRAIN, COMBO STRAIN, PF-2, PF-3 MAST ARM, SPAN WIRE, CONTROLLER/ CABINET & FOUNDATION, UTILITY POLES
LEVEL 50	'CLIP MASK' BOUNDARIES
LEVEL 51	'CLIP BOUNDARY" BOUNDARIES
LEVEL 52	PROPOSED SIGNAL POLES FOUNDATIONS
LEVEL 53	CLEARZONE TEMPLATES FOR SIGNAL/LIGHT POLES
LEVEL 54	SIGNAL HEAD SIGHT LINES - NB
LEVEL 55	SIGNAL HEAD SIGHT LINES - SB
LEVEL 56	SIGNAL HEAD SIGHT LINES - EB
LEVEL 57	SIGNAL HEAD SIGHT LINES - WB
LEVEL 58	SIGNAL DESIGNER WORKING LEVEL PAVEMENT MARKING LAYOUTS, SIGNAL WORKING LEVEL, LIGHTING WORKING LEVEL, SIGNING WORKING LEVEL
LEVEL 59	STAGING AREAS DIRECTIONAL BORE STAGING AREA, JACKING PIT - 20" PIPE SLEEVE JACKING PIT - 10" PIPE SLEEVE
LEVEL 60	BORDER TEXT - FILL-IN PRELIMINARY PLANS TITLE
LEVEL 61	SHEET INFORMATION NORTH ARROW, SCALE BAR, MATCHLINES, BORDER, STANDARD BORDER TEXT, VDOT LOGO, CONSULTANT LOGO
LEVEL 62	BORDER SNAP LOCATIONS
LEVEL 63	PRINT BOUNDARY

PLAN NO.	PROJECT	SHEET NO.
	8102 - 029 - 065	IJ

PROJECT MANAGER Sung S. Shin, PE (703) 877-5753
DESIGN SUPERVISED BY John M. McDowell, PE (703) 246-0028 (RKK)
DESIGNED BY Rummel, Klepper & Kahl, LLP (703) 246-0028

THESE PLANS ARE UNFINISHED AND UNAPPROVED AND ARE NOT TO BE USED FOR ANY TYPE OF CONSTRUCTION OR THE ACQUISITION OF RIGHT OF WAY.

TRANSPORTATION MANAGEMENT PLAN

REVISED	STATE	STATE ROUTE	STATE PROJECT	SHEET NO
	VA.		8102 - 029 - 065	IK

DESIGN FEATURES RELATING TO CONSTRUCTION OR TO REGULATION AND CONTROL OF TRAFFIC MAY BE SUBJECT TO CHANGE AS DEEMED NECESSARY BY THE DEPARTMENT

Rummel, Klepper & Kahl, LLP
Fairfax, Virginia
TRAFFIC ENGINEER

TRAFFIC CONTROL / MAINTENANCE OF TRAFFIC NOTES:

1. IT IS NOT THE INTENT OF THE MAINTENANCE OF TRAFFIC PLAN TO ENUMERATE EVERY DETAIL WHICH MUST BE CONSIDERED IN CONSTRUCTION, BUT ONLY TO SHOW THE GENERAL HANDLING OF TRAFFIC, UNLESS OTHERWISE APPROVED OR DIRECTED BY THE ENGINEER. THE CONTRACTOR SHALL PLAN AND PROSECUTE THE WORK IN ACCORDANCE WITH THIS TEMPORARY TRAFFIC CONTROL PLAN.
2. ALL WORK SHALL BE COMPLETED IN ACCORDANCE WITH THE 2011 VIRGINIA WORK AREA PROTECTION MANUAL.
3. THE CONTRACTOR CAN REQUEST A MODIFICATION TO THE TTC PLAN, BASED ON SITE CONDITIONS, BUT IT MUST BE APPROVED BY THE ENGINEER OF RECORD PRIOR TO THE INSTALLATION OF ANY TEMPORARY LANE CLOSURE MEASURES.
4. THE CONTRACTOR SHALL FOLLOW THE MAINTENANCE OF TRAFFIC (MOT) PLANS AS PROPOSED IN SHEETS IL(1) THROUGH IL(7). IF THE CONTRACTOR WISHES TO DEVIATE FROM THE PROPOSED MOT PLANS, WITH GOOD CAUSE, THE CONTRACTOR SHALL DEVELOP PLANS THAT CONFORM TO THE RECOMMENDATIONS IN THE VIRGINIA WORK AREA PROTECTION MANUAL, MUTCD, VDOT'S IIM-LD-241.5, AND VDOT'S 2008 ROAD AND BRIDGE SPECIFICATIONS. THE CONTRACTOR SHALL SUBMIT THE TRAFFIC CONTROL PLAN FOR APPROVAL BY THE ENGINEER PRIOR TO THE INSTALLATION OF ANY TEMPORARY LANE CLOSURE MEASURES. THE CONTRACTOR SHALL DEVELOP THE TRAFFIC CONTROL PLAN AT NO COST TO THE PROJECT. IT WILL BE THE RESPONSIBILITY OF THE CONTRACTOR TO PROVIDE FOR SAFE TRAVEL ON THE ROADWAYS.
5. PEAK HOURS: 6:00 AM - 9:00 AM AND 3:00 PM - 8:00 PM, M-F
   NON-PEAK HOURS: 9:00 AM - 3:00 PM AND 8:00 PM - 6:00 AM M-F, AND WEEKENDS

   THE CONTRACTOR SHALL SUBMIT A TRAFFIC CONTROL PLAN FOR APPROVAL BY THE ENGINEER PRIOR TO THE INSTALLATION OF ANY TEMPORARY LANE CLOSURE MEASURES. LANE CLOSURES THAT RESTRICT TRAFFIC WILL NOT BE PERMITTED ON HOLIDAYS FROM 12:00 NOON THE DAY BEFORE A HOLIDAY UNTIL NOON THE DAY AFTER A HOLIDAY UNLESS APPROVED BY THE ENGINEER. WHEN A HOLIDAY FALLS ON A FRIDAY, LANE CLOSURES ARE NOT PERMITTED FROM NOON THURSDAY UNTIL NOON ON MONDAY. WHEN THE HOLIDAY FALLS ON MONDAY, LANE CLOSURES ARE NOT PERMITTED FROM NOON FRIDAY UNTIL NOON ON TUESDAY.
6. THE CLEAR ZONE SHALL BE MAINTAINED FREE OF PARKED EQUIPMENT AND STORED MATERIAL OR PROTECTED AT THE END OF EACH DAY IN ACCORDANCE WITH THE VIRGINIA WORK AREA PROTECTION MANUAL.
7. UPON COMPLETION OF CONSTRUCTION, THE CONTRACTOR SHALL REMOVE TEMPORARY SIGNAGE AND SIGNALIZATION, AND REPLACE WITH PERMANENT STRIPING, SIGNAGE PLAN, AND SIGNALIZATION.
8. THE CONTRACTOR SHALL MAINTAIN PEDESTRIAN AND VEHICULAR ACCESS TO ADJACENT PROPERTIES AND INTERSECTIONS DURING ALL PHASES OF CONSTRUCTION ALONG JONES BRANCH CONNECTOR.
9. ANY EXISTING PAVEMENT MARKINGS THAT CONFLICT WITH THE TEMPORARY STRIPING ARE TO BE ERADICATED.
10. THIS PROJECT IS A TYPE B (CATEGORY III & IV) PROJECT AS PER IIM-LD-241.5.

SEQUENCE OF CONSTRUCTION NOTES:

PHASE 1A:
1. CONSTRUCT WESTERN PORTION OF EASTBOUND JONES BRANCH CONNECTOR (STA. 18+00 TO STA. 30+00).
2. CONSTRUCT THE WIDENING/LENGTHENING OF THE BRIDGE (BRIDGE No. 2248) CROSSING I-495S.
3. CONSTRUCT PORTION OF I-495 SB EXPRESS LANES ON RAMP (MAINTAIN ACCESS).
4. CONSTRUCT THE WIDENING OF THE BRIDGE (BRIDGE No. 2242) CROSSING I-495 SB EXPRESS LANES.
5. CONSTRUCT PORTION OF I-495 NB EXPRESS LANES OFF RAMP (MAINTAIN ACCESS).
6. CONSTRUCT THE NEW BRIDGE (BRIDGE No. 2902) CROSSING OVER I-495 NB, I-495 NB EXPRESS LANES, AND PROPOSED CAPITAL ONE SERVICE ROAD.
7. CONSTRUCT CAPITAL ONE DRIVE AND CAPITAL ONE SERVICE ROAD WHILE MAINTAINING CURRENT ACCESS.
8. CONSTRUCT PORTION OF GATES OF McLEAN PARKING LOT.
9. CONSTRUCT EASTERN PORTION OF EASTBOUND JONES BRANCH CONNECTOR (STA. 37+40 TO STA. 47+00).

PHASE 1B:
1. CONSTRUCT REMAINING PORTIONS OF THE NEW BRIDGE (BRIDGE No. 2902) CROSSING OVER I-495 NB, I-495 NB EXPRESS LANES, AND PROPOSED CAPITAL ONE SERVICE ROAD.
2. CONSTRUCT EAST AND WESTBOUND PORTIONS OF JONES BRANCH CONNECTOR (STA. 33+40 TO STA. 37+40).

PHASE 2:
1. CONSTRUCT REMAINING PORTIONS OF WESTBOUND JONES BRANCH CONNECTOR (STA. 18+00 TO STA. 28+50), INCLUDING LENGTHENING THE EXISTING PORTION OF THE BRIDGE (BRIDGE NO. 2248) CROSSING I-495S.
2. CONSTRUCT PORTION OF I-495 NB/SB EXPRESS LANES ON/OFF RAMP (MAINTAIN ACCESS)
3. CONSTRUCT REMAINING CAPITAL ONE SERVICE ROAD AND SIDEWALKS ADJACENT TO GATES OF McLEAN.
4. CONSTRUCT REMAINING PORTIONS OF GATES OF McLEAN PARKING LOT.
5. CONSTRUCT EASTERN PORTION OF WESTBOUND JONES BRANCH CONNECTOR (STA. 37+90 TO STA. 47+00).

PHASE 3:
1. CONSTRUCT CURBED MEDIAN ON JONES BRANCH CONNECTOR (STA. 18+00 TO STA. 27+20 AND STA. 27+30 TO STA. 29+50).

PLAN NO.	PROJECT	SHEET NO.
	8102 - 029 - 065	IK

PROJECT MANAGER Sung S. Shin, PE (703) 877-5753
DESIGN SUPERVISED BY John M. McDowell, PE (703) 246-0028 (RKK)
DESIGNED BY Rummel, Klepper & Kahl, LLP (703) 246-0028

THESE PLANS ARE UNFINISHED AND UNAPPROVED AND ARE NOT TO BE USED FOR ANY TYPE OF CONSTRUCTION OR THE ACQUISITION OF RIGHT OF WAY.

MAINTENANCE OF TRAFFIC & SEQUENCE OF CONSTRUCTION PLAN PHASE 1A

REVISED	STATE	STATE ROUTE	STATE PROJECT	SHEET NO.
	VA.		8102 - 029 - 065	IL(1)

DESIGN FEATURES RELATING TO CONSTRUCTION OR TO REGULATION AND CONTROL OF TRAFFIC MAY BE SUBJECT TO CHANGE AS DEEMED NECESSARY BY THE DEPARTMENT

Rummel, Klepper & Kahl, LLP
Fairfax, Virginia
TRAFFIC ENGINEER

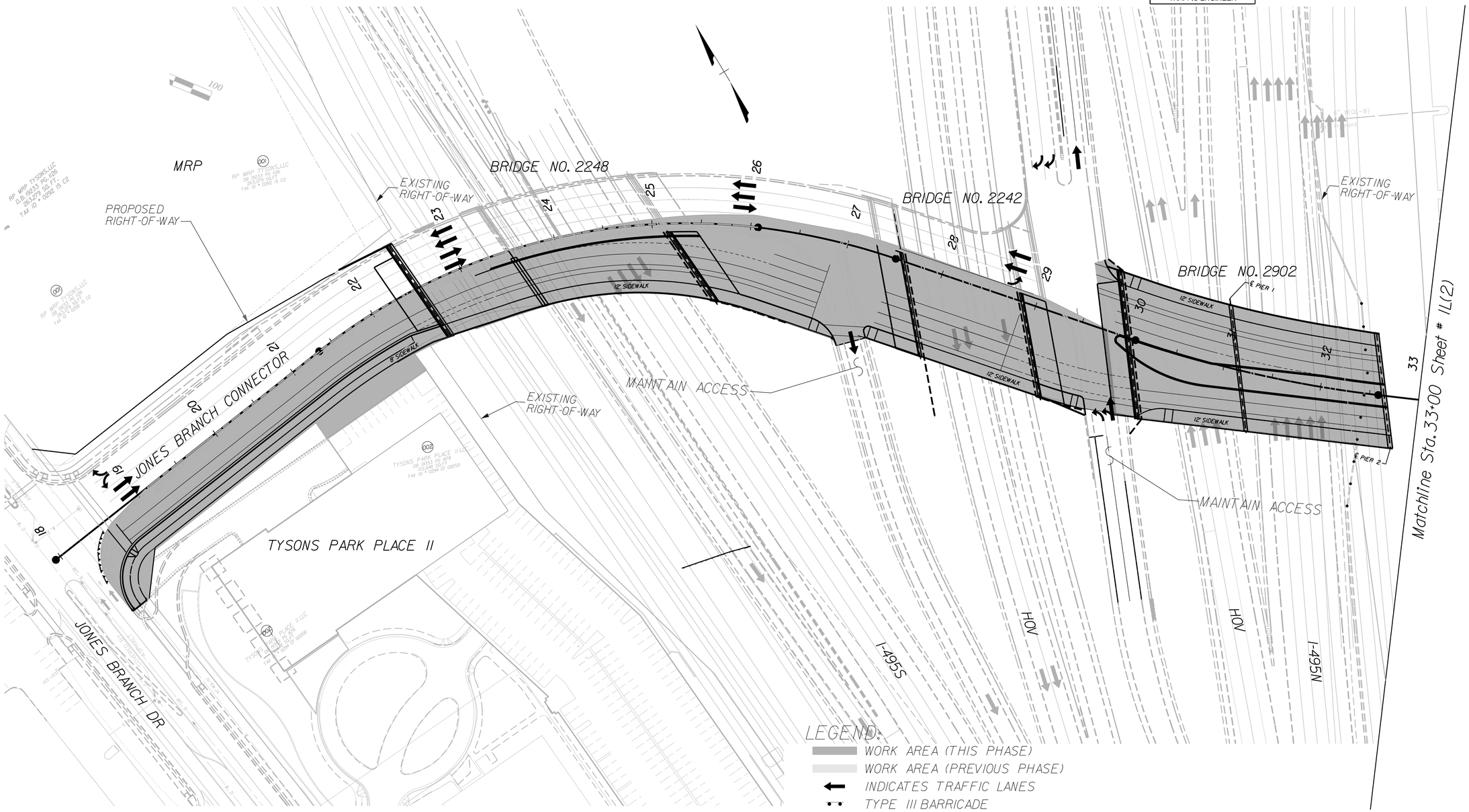

PLAN NO.	PROJECT	SHEET NO.
	8102 - 029 - 065	IL(1)

PROJECT MANAGER Sung S. Shin, PE (703) 877-5753
DESIGN SUPERVISED BY John M. McDowell, PE (703) 246-0028 (RKK)
DESIGNED BY Rummel, Klepper & Kahl, LLP (703) 246-0028

THESE PLANS ARE UNFINISHED AND UNAPPROVED AND ARE NOT TO BE USED FOR ANY TYPE OF CONSTRUCTION OR THE ACQUISITION OF RIGHT OF WAY.

MAINTENANCE OF TRAFFIC & SEQUENCE OF CONSTRUCTION PLAN PHASE 1A

REVISED	STATE	ROUTE	PROJECT	SHEET NO.
	VA.		8102 - 029 - 065	IL(2)

DESIGN FEATURES RELATING TO CONSTRUCTION OR TO REGULATION AND CONTROL OF TRAFFIC MAY BE SUBJECT TO CHANGE AS DEEMED NECESSARY BY THE DEPARTMENT

Rummel, Klepper & Kahl, LLP
Fairfax, Virginia
TRAFFIC ENGINEER

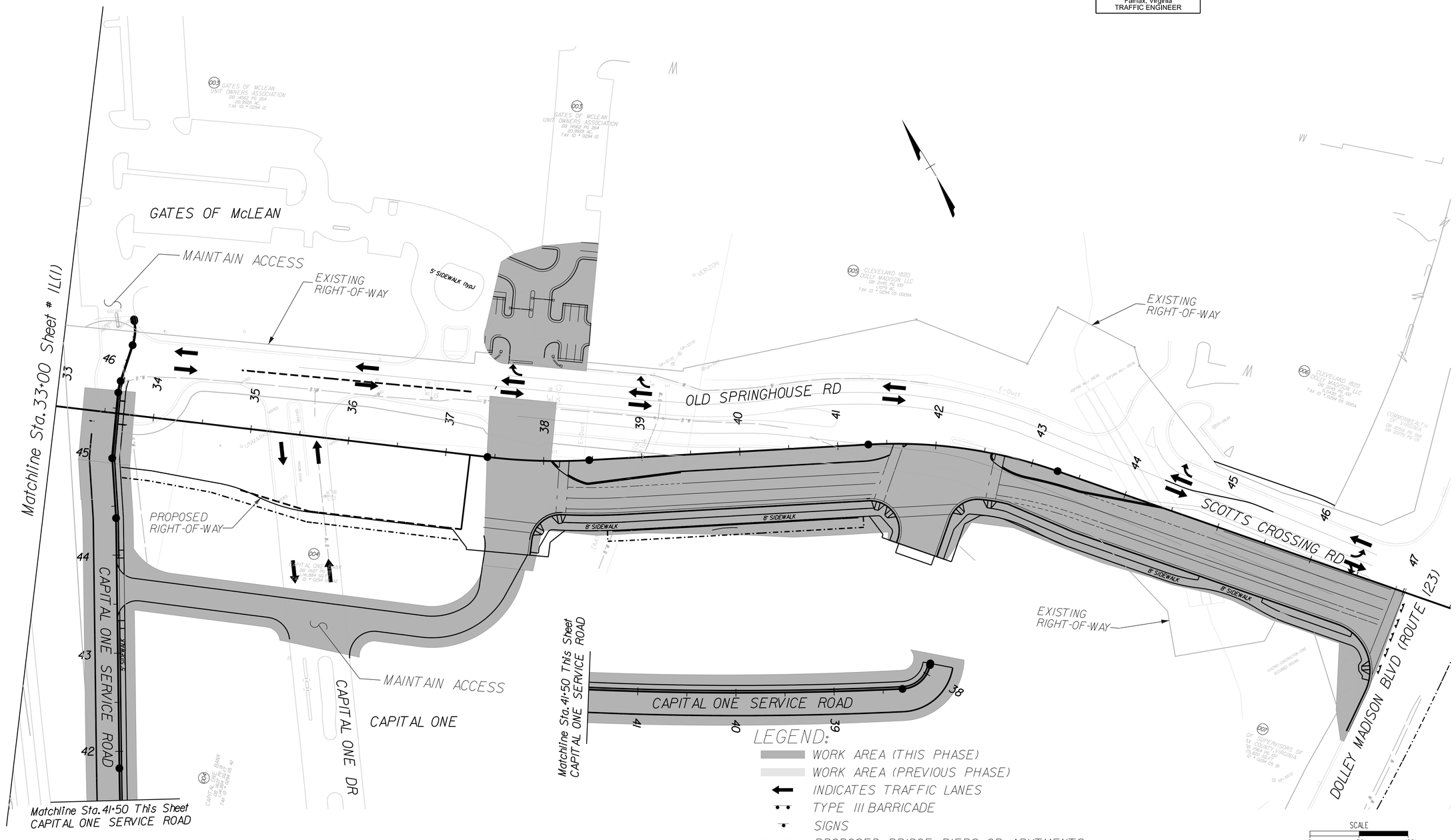

PLAN NO.	PROJECT	SHEET NO.
	8102 - 029 - 065	IL(2)

PROJECT MANAGER Sung S. Shin, PE (703) 877-5753
DESIGN SUPERVISED BY John M. McDowell, PE (703) 246-0028 (RKK)
DESIGNED BY Rummel, Klepper & Kahl, LLP (703) 246-0028

THESE PLANS ARE UNFINISHED AND UNAPPROVED AND ARE NOT TO BE USED FOR ANY TYPE OF CONSTRUCTION OR THE ACQUISITION OF RIGHT OF WAY.

MAINTENANCE OF TRAFFIC & SEQUENCE OF CONSTRUCTION PLAN PHASE 1B

REVISED	STATE	STATE ROUTE	STATE PROJECT	SHEET NO.
	VA.		8102 - 029 - 065	IL(3)

DESIGN FEATURES RELATING TO CONSTRUCTION OR TO REGULATION AND CONTROL OF TRAFFIC MAY BE SUBJECT TO CHANGE AS DEEMED NECESSARY BY THE DEPARTMENT

Rummel, Klepper & Kahl, LLP
Fairfax, Virginia
TRAFFIC ENGINEER

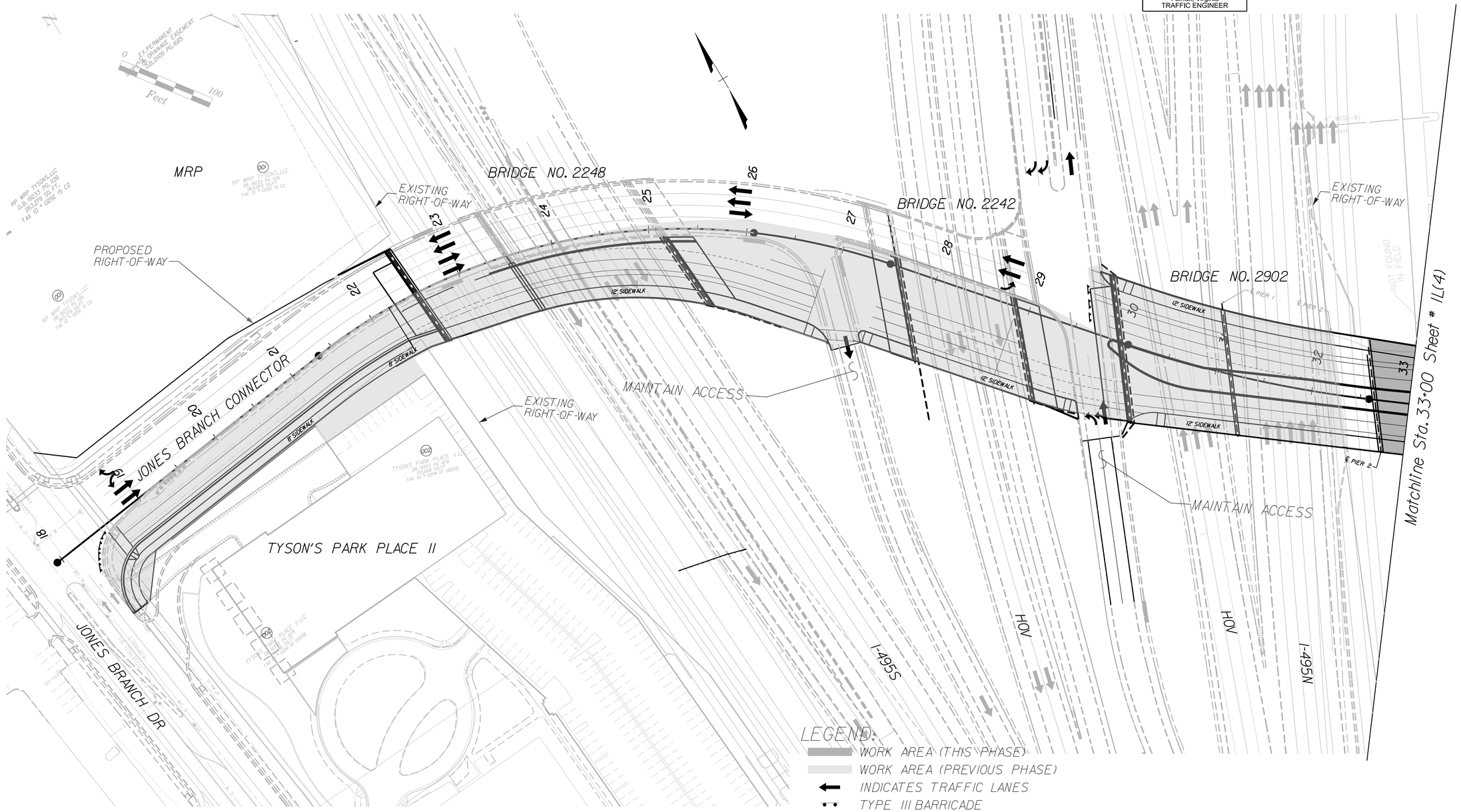

PLAN NO.	PROJECT	SHEET NO.
	8102 - 029 - 065	IL(3)

PROJECT MANAGER Sung S. Shin, PE (703) 877-5753
DESIGN SUPERVISED BY John M. McDowell, PE (703) 246-0028 (RKK)
DESIGNED BY Rummel, Klepper & Kahl, LLP (703) 246-0028

THESE PLANS ARE UNFINISHED AND UNAPPROVED AND ARE NOT TO BE USED FOR ANY TYPE OF CONSTRUCTION OR THE ACQUISITION OF RIGHT OF WAY.

MAINTENANCE OF TRAFFIC & SEQUENCE OF CONSTRUCTION PLAN PHASE 1B

REVISED	STATE	STATE ROUTE	STATE PROJECT	SHEET NO.
	VA.		8102 - 029 - 065	IL(4)

DESIGN FEATURES RELATING TO CONSTRUCTION OR TO REGULATION AND CONTROL OF TRAFFIC MAY BE SUBJECT TO CHANGE AS DEEMED NECESSARY BY THE DEPARTMENT

Rummel, Klepper & Kahl, LLP
Fairfax, Virginia
TRAFFIC ENGINEER

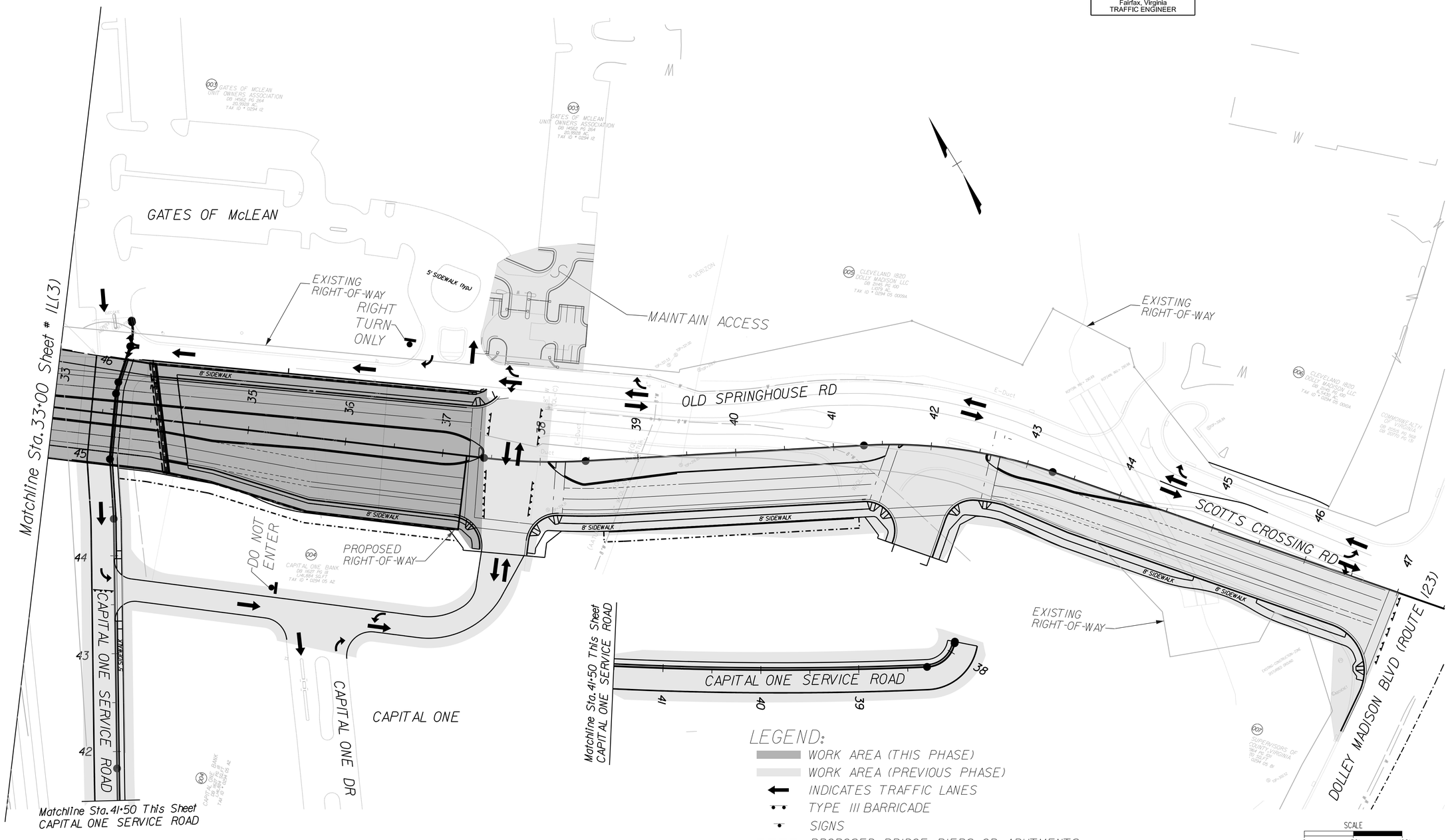

PLAN NO.	PROJECT	SHEET NO.
	8102 - 029 - 065	IL(4)

PROJECT MANAGER Sung S. Shin, PE (703) 877-5753
DESIGN SUPERVISED BY John M. McDowell, PE (703) 246-0028 (RKK)
DESIGNED BY Rummel, Klepper & Kahl, LLP (703) 246-0028

THESE PLANS ARE UNFINISHED AND UNAPPROVED AND ARE NOT TO BE USED FOR ANY TYPE OF CONSTRUCTION OR THE ACQUISITION OF RIGHT OF WAY.

MAINTENANCE OF TRAFFIC & SEQUENCE OF CONSTRUCTION PLAN PHASE 2

REVISED	STATE	STATE ROUTE	STATE PROJECT	SHEET NO.
	VA.		8102 - 029 - 065	IL(5)

DESIGN FEATURES RELATING TO CONSTRUCTION OR TO REGULATION AND CONTROL OF TRAFFIC MAY BE SUBJECT TO CHANGE AS DEEMED NECESSARY BY THE DEPARTMENT

Rummel, Klepper & Kahl, LLP
Fairfax, Virginia
TRAFFIC ENGINEER

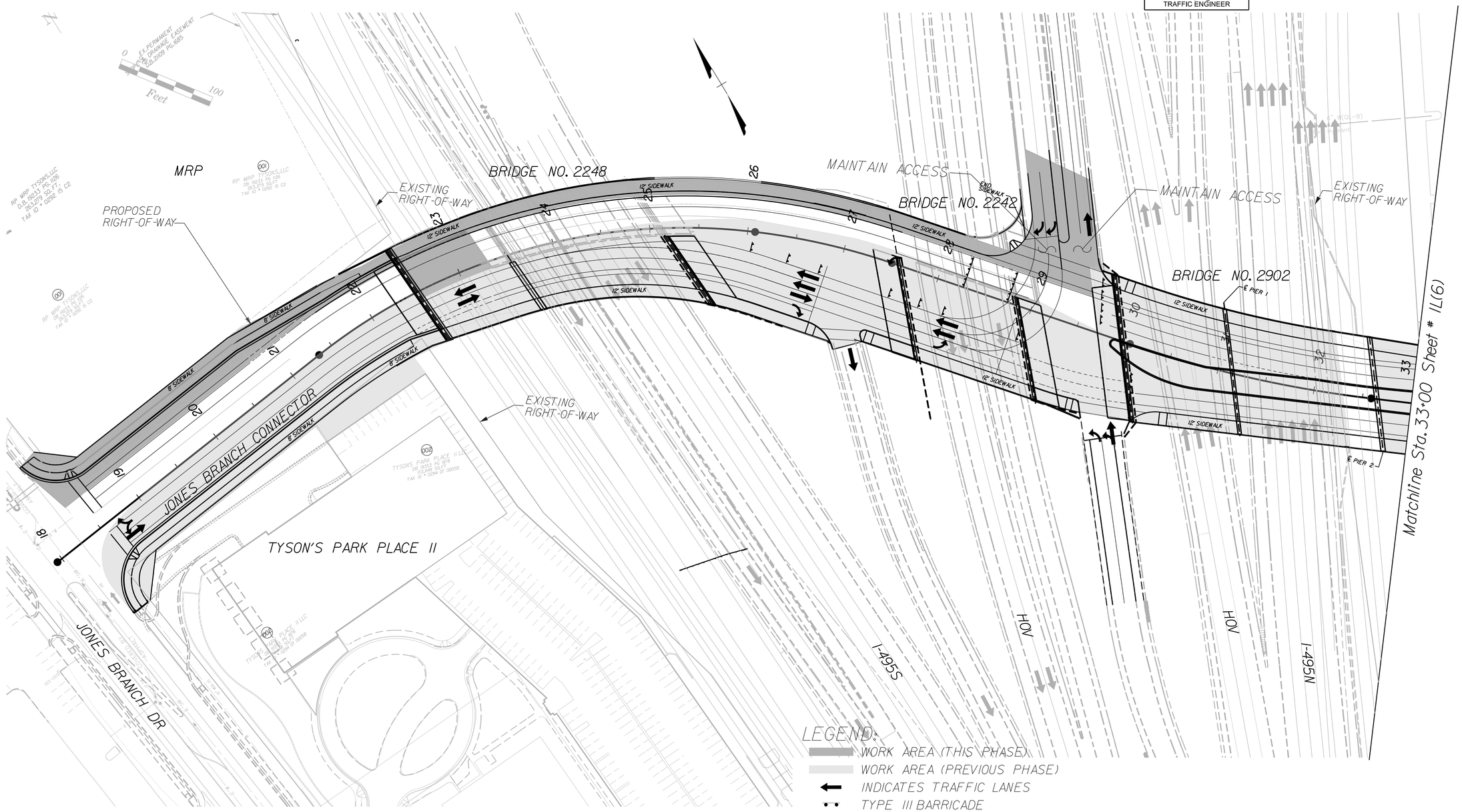

PLAN NO.	PROJECT	SHEET NO.
	8102 - 029 - 065	IL(5)

PROJECT MANAGER Sung S. Shin, PE (703) 877-5753
DESIGN SUPERVISED BY John M. McDowell, PE (703) 246-0028 (RKK)
DESIGNED BY Rummel, Klepper & Kahl, LLP (703) 246-0028

THESE PLANS ARE UNFINISHED AND UNAPPROVED AND ARE NOT TO BE USED FOR ANY TYPE OF CONSTRUCTION OR THE ACQUISITION OF RIGHT OF WAY.

MAINTENANCE OF TRAFFIC & SEQUENCE OF CONSTRUCTION PLAN PHASE 2

REVISED	STATE	ROUTE	PROJECT	SHEET NO.
	VA.		8102 - 029 - 065	IL(6)

DESIGN FEATURES RELATING TO CONSTRUCTION OR TO REGULATION AND CONTROL OF TRAFFIC MAY BE SUBJECT TO CHANGE AS DEEMED NECESSARY BY THE DEPARTMENT

Rummel, Klepper & Kahl, LLP
Fairfax, Virginia
TRAFFIC ENGINEER

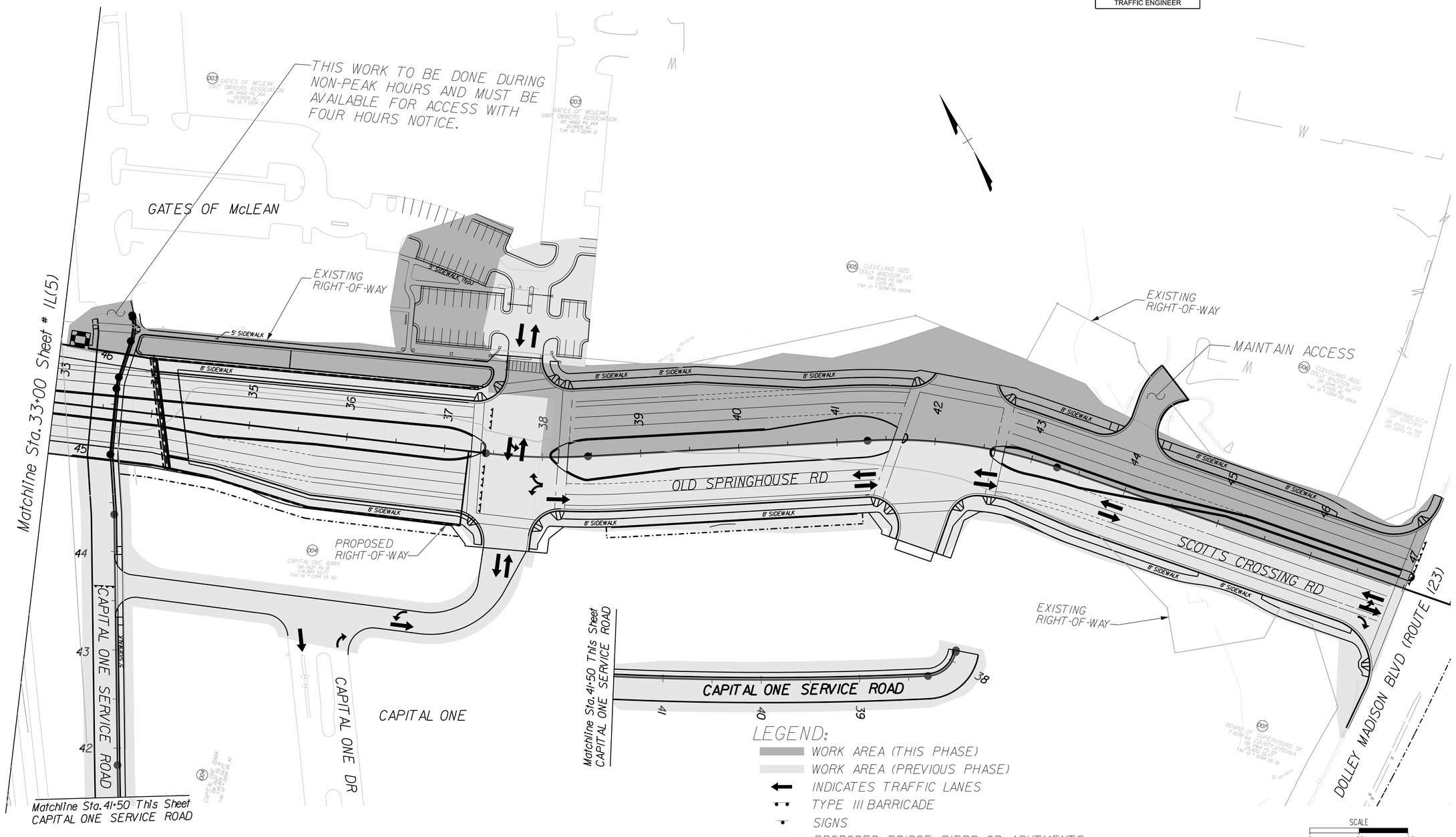

PLAN NO.	PROJECT	SHEET NO.
	8102 - 029 - 065	IL(6)

PROJECT MANAGER Sung S. Shin, PE (703) 877-5753
DESIGN SUPERVISED BY John M. McDowell, PE (703) 246-0028 (RKK)
DESIGNED BY Rummel, Klepper & Kahl, LLP (703) 246-0028

THESE PLANS ARE UNFINISHED AND UNAPPROVED AND ARE NOT TO BE USED FOR ANY TYPE OF CONSTRUCTION OR THE ACQUISITION OF RIGHT OF WAY.

MAINTENANCE OF TRAFFIC & SEQUENCE OF CONSTRUCTION PLAN PHASE 3

REVISED	STATE	STATE ROUTE	STATE PROJECT	SHEET NO.
	VA.		8102 - 029 - 065	IL(7)

DESIGN FEATURES RELATING TO CONSTRUCTION OR TO REGULATION AND CONTROL OF TRAFFIC MAY BE SUBJECT TO CHANGE AS DEEMED NECESSARY BY THE DEPARTMENT

Rummel, Klepper & Kahl, LLP
Fairfax, Virginia
TRAFFIC ENGINEER

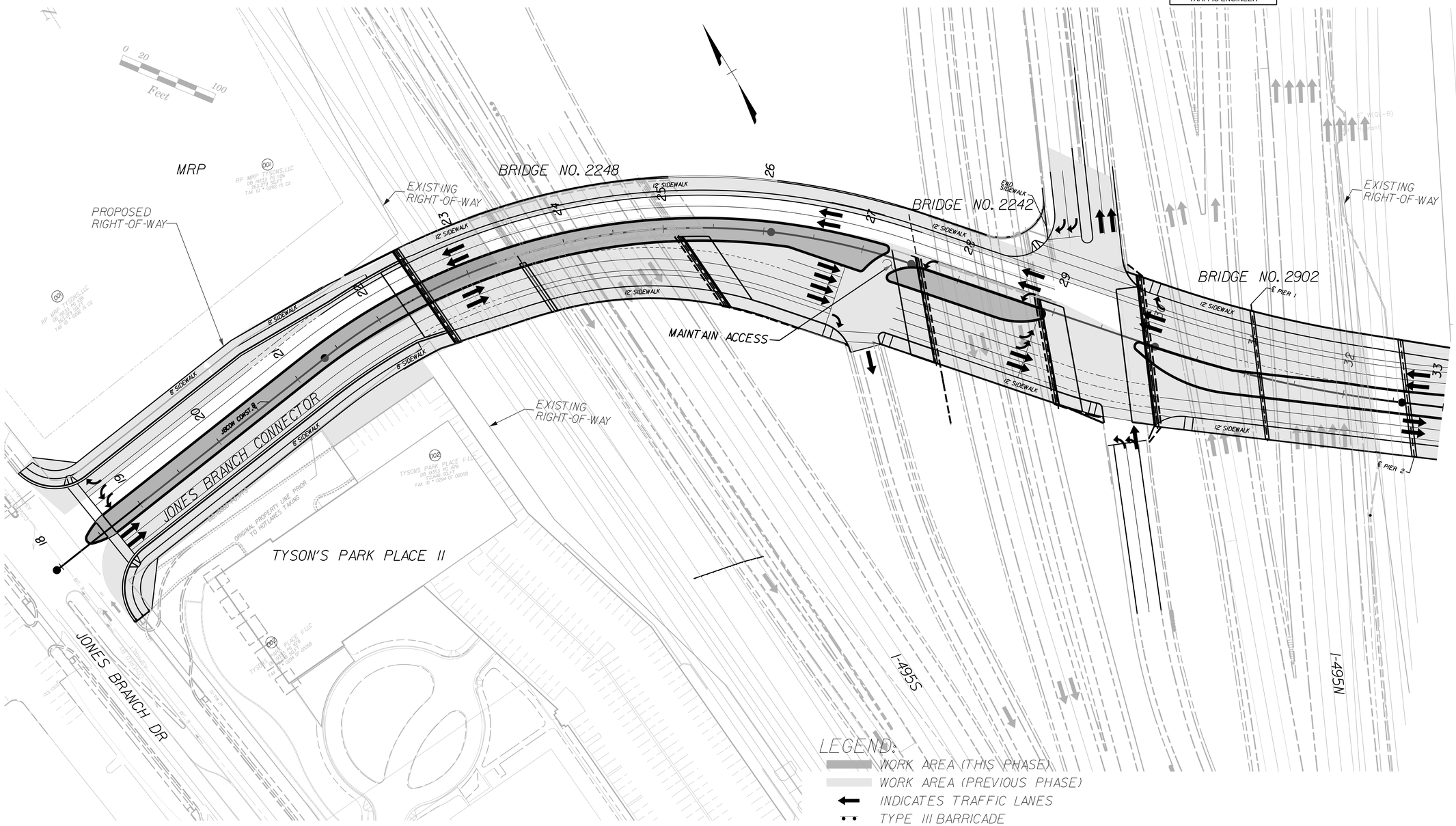

SCALE 0 50' 100'

PLAN NO.	PROJECT	SHEET NO.
	8102 - 029 - 065	IL(7)

PROJECT MANAGER Sung S.Shin, PE (703) 877-5753
DESIGN SUPERVISED BY John M.McDowell, PE (703) 246-0028 (RKK)
DESIGNED BY Rummel, Klepper & Kahl, LLP (703) 246-0028

REVISED	STATE	STATE ROUTE	STATE PROJECT	SHEET NO
	VA.		8102 - 029 - 065	IM

LEGEND

DESIGN FEATURES RELATING TO CONSTRUCTION OR TO REGULATION AND CONTROL OF TRAFFIC MAY BE SUBJECT TO CHANGE AS DEEMED NECESSARY BY THE DEPARTMENT.

NOTE: THE LANE CONFIGURATION AND STORAGE LENGTH DEDICATED TO BE FINALIZED BASED ON THE DETAILED TRAFFIC ANALYSIS RESULTS.

CONSTRUCTION NOTE LEGEND

1. STD. CG-6 REQ'D.
2. STD. CG-2 REQ'D.
3. STD. HR-1 REQ'D.
4. STD. MB-7F REQ'D.
5. STD. GR-F0A-1 REQ'D.
6. STD. GR-9 REQ'D.
7. STD. RW-3 REQ'D.
8. MSE RETAINING WALL
9. QUADGUARD II, TL-2
10. STD. FE-CL, REQ'D.
11. REMOVE EXIST. BARRIER WALL
12. REMOVE EXIST. SIDEWALK
13. REMOVE EXIST. CURB & GUTTER
14. REMOVE EXIST. CONC. BARRIER
15. REMOVE EXIST. CONC. ISLAND
16. REMOVE EXIST. GUARDRAIL
17. REMOVE EXIST. SOUNDWALL
18. REMOVE EXIST. FENCE
19. REMOVE EXIST. RET. WALL TO BE FLUSH WITH PROP. GRADE OF SIDEWALK
20. STD. RETAINING WALL CAP
21. REMOVE EXIST. RET. WALL
22. STD.CG-7 REQ'D
23. STANDARD SOLID CONCRETE RAISED MEDIAN STRIP (MS-1)
24. STD. CG-12, TYPE A CURB RAMP
25. STD. CG-12, TYPE B CURB RAMP
26. STD. CG-12, TYPE M1
27. STD. CG-12, TYPE M2
28. STD. BR27C REQ'D.
29. STD.PEDESTRIAN FENCE TYPE B
30. STD.PEDESTRIAN FENCE TYPE C

THESE PLANS ARE UNFINISHED AND UNAPPROVED AND ARE NOT TO BE USED FOR ANY TYPE OF CONSTRUCTION OR THE ACQUISITION OF RIGHT OF WAY.

PLAN NO.	PROJECT	SHEET NO.
	8102 - 029 - 065	IM

PROJECT MANAGER Sung S.Shin, PE (703) 877-5753
DESIGN SUPERVISED BY John M.McDowell, PE (703) 246-0028 (RKK)
DESIGNED BY Rummel, Klepper & Kahl, LLP (703) 246-0028

REVISED	STATE	STATE ROUTE	STATE PROJECT	SHEET NO
	VA.		8102 - 029 - 065	2

DESIGN FEATURES RELATING TO CONSTRUCTION OR TO REGULATION AND CONTROL OF TRAFFIC MAY BE SUBJECT TO CHANGE AS DEEMED NECESSARY BY THE DEPARTMENT.

NOTE: THE LANE CONFIGURATION AND STORAGE LENGTH DEDICATED TO BE FINALIZED BASED ON THE DETAILED TRAFFIC ANALYSIS RESULTS.

GENERAL NOTES

GRADING

G-1 The grade line denotes top of finished pavement unless shown otherwise on typical sections or plans.

G-2 Earthwork quantities on this project are based on anticipated settlement and may require adjusting during construction.

G-4 The cost of removal of all existing concrete items located in the area to be graded, including, but not limited to the following, shall be included in the price bid for regular excavation: Conc. Curb, Pipe Head Walls, Culverts, Storm Sewer Pipes, Cast Iron Drainage Pipe.

G-5 The excavation of unsuitable material as specified on these plans is based on previously conducted subsurface soil investigation. If, during construction, it is deemed necessary to change the depth more than one foot, or the limits of such excavation, such change is to be made at the direction of the Engineer and measurement and payment shall be made in accordance with Section 303 of the applicable VDOT Road and Bridge Specifications.

G-6 The borrow material for this project shall be a minimum CBR_____ or as approved by the Materials Engineer.

INCIDENTALS

I-4 All trees located within the Clear Zone or within a minimum of 30 feet of the edge of pavement, within the limits of the right of way or construction easement, unless otherwise noted on plans or directed by the Engineer, shall be removed, as provided for a Section 301 of the applicable VDOT Road and Bridge Specifications.

I-5 That portion of the right of way lying within the Clear Zone or within a minimum of 10 feet from the edge of pavement or surfacing or within the limits of the construction slopes beyond 10 feet, shall be cleared and grubbed in accordance with the applicable VDOT Road and Bridge Specifications, Section 301, where sufficient right of way or construction easement is provided.

I-9 When no centerline alignment is shown for a proposed entrance, the entrance shall be constructed in the same location as the existing entrance.

I-11 GR-2A or optional GR-2 stiffening method shall be used. Refer to the 2008 Road & Bridge Std. 501.39.

I-10 St'd. RM-1 Right of Way monuments shall be set by the Contractor.

I-16 The "underground utilities" survey data on this project has been provided by consultant and copies are available from the Department.

I-17 For method of constructing Straight-Line Taper Lanes in curb and/or curb and gutter sections, see typical details on this sheet.

I-18 All pavement markings and traffic flow arrows shown on the roadway construction plans are schematic only. The actual location and application of pavement markings shall be in accordance with Section 704 of the applicable VDOT Road and Bridge Specifications, MUTCD, sequence of construction/ traffic control plans, pavement marking plan sheets thru and as directed by the Engineer.

I-19 The following sources, under contract with VDOT, have provided information on this project:

Hydraulic Design - Rummel, Klepper & Kahl, LLP
Roadway Design - Rummel, Klepper & Kahl, LLP
Utility Design -
Utility Designation -
Utility Location -
Survey - VDOT, Rice Associates

If questions or problems arise during construction, please contact the Project Designer. DO NOT CONTACT THE OUTSIDE SOURCES.

I-20 The Official Electronic .tif Version of the plans will override the paper copies or prints of specific layers.

Portions of this plan assembly have been CADD generated. To assist in the construction of the project electronic files will be available to the prime contractor after award of the contract.

I-21 All electronic plan assemblies will include the construction plans in two formats: .tif files and MicroStation format (.dgn) files. Only the .tif files will be considered as part of the official plan assembly.

The MicroStation format (.dgn) files are furnished only as information for the contractor. These plans are developed in layers (levels) to aid in readability. However, the construction items may or may not be in the proper layering scheme as described in the VDOT CADD Manual. The MicroStation files will only match the scanned files if all levels are turned on. A MicroStation Software license is required to be able to read these files.

PAVEMENT

P-2 The pavement materials on this project will be paid for on a tonnage basis. The weight will vary in accordance with the specific gravity of the aggregates and the asphaltic content of the mix actually used to secure the design depth. The weight of the asphalt concrete is based on 95% of the theoretical maximum density.

DRAINAGE

D-1 The locations of all drainage structures shown on these plans are approximate only, with the exception of structures showing specific stations, special design bridges and storm sewers. The "h" dimensions shown on the plans for drop inlets and junction boxes and the L. F. dimensions shown for manholes are approximate.

D-2 The horizontal location and invert elevations shown for proposed culverts and storm sewer outfall pipes are based on existing survey data and required design criteria. If during construction, it is found that the horizontal location or invert elevations shown on the plans differ significantly from the horizontal location or elevations of the stream or swale in which the culvert or storm sewer outfall pipe is to be placed, the Engineer shall confer with, and get approval from, the applicable District Drainage Engineer before installing the culvert or storm sewer outfall pipe.

D-3 The "H" dimensions shown on plans for drop inlets and junction boxes and the "L.F." dimensions shown for manholes are for estimating purposes and are based on the proposed invert elevations shown for the structure and the anticipated top (rim) elevation based on existing or proposed finished grade. The actual "H" or "L.F." dimensions are to be determined by the contractor from field conditions.

D-10 The proposed riprap may be omitted by the Engineer if the slope designated for placement of riprap is found to be comprised of solid rock or closely consolidated boulders with soundness, size and weight equal to, or exceeding, the specifications for the proposed riprap.

D-12 All existing drainage facilities labeled "To Be Abandoned" shall be left in place, backfilled and plugged in accordance with the VDOT Road and Bridge Standard PP-1. Basis of Payment will be C.Y. of Flowable Backfill.

D-13 Existing drainage facilities being utilized as a part of the drainage system, and designated on the plans "To Be Cleaned Out" shall be cleaned as directed by the Engineer. The cost incidental to this shall be included in the contract price for other items.

D-14 Proposed drop inlets with a height (H) less than the standard minimum shown in the VDOT Road and Bridge Standards shall be considered and paid for as Standard Drop Inlets for the type specified.

D-16 When CG-6 or CG-7 is specified on a radius (such as at a street intersection), the Engineer may approve a decrease in the cross slope of the gutter to facilitate proper drainage.

EROSION AND SILTATION CONTROL

E-1 If for the removal of Brush Silt Barrier is specified on the plans or required by the Engineer, the cost of removal and disposal of brush shall be in accordance with Section 109 of the applicable VDOT Road and Bridge Specifications.

E-2 Rock for Check Dams, Inlet Protection, Erosion Control Stone and Riprap shall be in accordance with Section 203 and Section 414 of the applicable VDOT Road and Bridge Specifications.

E-3 The following symbols are used to depict Erosion Control items in the plan assembly:

- EC-2 — Denotes Protective Covering, St'd. EC-2
- EC-3A, EC-3B, EC-3C — Denotes Soil Stabilization Mat. St'd. EC-3 Type A, B or C
- TFB — Denotes Temporary Filter Barrier, St'd EC-5
- TSF — Denotes Temporary Silt Fence, St'd EC-5
- TDC — Denotes Temporary Diversion Channel, St'd EC-12
- DD — Denotes Temporary Diversion Dike, St'd EC-9
- TC-I — Denotes Turbidity Curtain, Type - Impervious
- TC-P — Denotes Turbidity Curtain, Type - Pervious
- RCD-1 — Denotes Rock Check Dam, Type I: St'd EC-4
- RCD-2 — Denotes Rock Check Dam, Type II: St'd EC-4
- IP-A — Denotes Inlet Protection, Type A: St'd EC-6
- IP-B — Denotes Inlet Protection, Type B: St'd EC-6

ALLOWABLE TYPE OF STORM SEWER PIPE (UNLESS OTHERWISE SHOWN ON PLANS)
(SEE ROAD AND BRIDGE STANDARD PC-1 FOR HEIGHT OF COVER LIMITATIONS FOR EACH TYPE)

LOCATION	CONCRETE	CORRUGATED STEEL ALUMINUM COATED TYPE 2 FULLY CONCRETE LINED	ALUMINUM COATED TYPE 2 STEEL SPIRAL RIB	POLYMER COATED (10/10) CORRUGATED STEEL SPIRAL RIB	POLYMER COATED (10/10) CORRUGATED STEEL DOUBLE WALL (SMOOTH INTERIOR)	ALUMINUM SPIRAL RIB	POLYVINYLCHLORIDE (PVC) RIBBED PIPE (SMOOTH INTERIOR)	POLYETHYLENE (PE) CORRUGATED TYPE S
ALL LOCATIONS	X				X		X	X

TYPICAL STRAIGHT - LINE TAPER LANE

(Use with Curbs and/or Curb & Gutters)

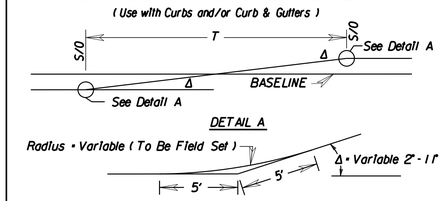

T - See plans for Length of T.

S/O - See plans for Stations and Offsets.

THESE PLANS ARE UNFINISHED AND UNAPPROVED AND ARE NOT TO BE USED FOR ANY TYPE OF CONSTRUCTION OR THE ACQUISITION OF RIGHT OF WAY.

PLAN NO.	PROJECT	SHEET NO.
	8102 - 029 - 065	2

PROJECT MANAGER Sung S. Shin, PE (703) 877-5753
DESIGN SUPERVISED BY John M. McDowell, PE (703) 246-0028 (RKK)
DESIGNED BY Rummel, Klepper & Kahl, LLP (703) 246-0028

REVISED	STATE	STATE ROUTE	STATE PROJECT	SHEET NO
	VA.		8102 - 029 - 065	2A(1)

Rummel, Klepper & Kahl, LLP
Fairfax, Virginia
ROADWAY ENGINEER

VDOT Materials
Fairfax, Virginia
MATERIALS ENGINEER

DESIGN FEATURES RELATING TO CONSTRUCTION OR TO REGULATION AND CONTROL OF TRAFFIC MAY BE SUBJECT TO CHANGE AS DEEMED NECESSARY BY THE DEPARTMENT.

NOTE: THE LANE CONFIGURATION AND STORAGE LENGTH DEDICATED TO BE FINALIZED BASED ON THE DETAILED TRAFFIC ANALYSIS RESULTS.

TYPICAL SECTIONS

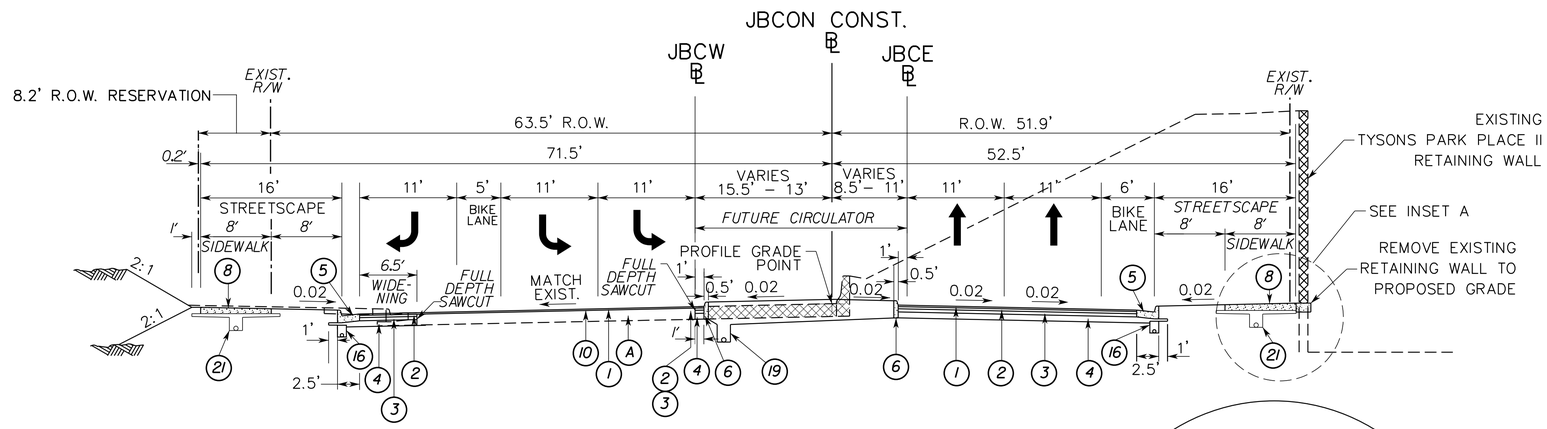

TYPICAL SECTIONS

JONES BRANCH CONNECTOR

STA 18+23.00 TO STA 22+50.00

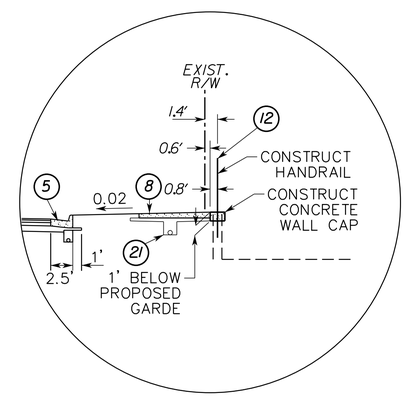

INSET A

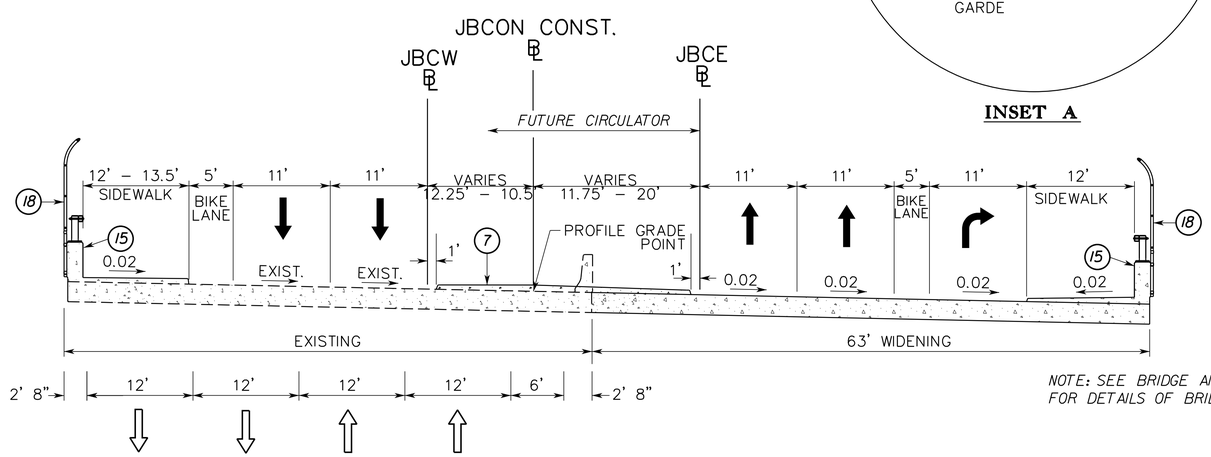

NOTE: SEE BRIDGE AND RETAINING WALL PLANS FOR DETAILS OF BRIDGE CONSTRUCTION

TYPICAL SECTIONS

JONES BRANCH CONNECTOR

STA 22+50.00 TO STA 25+12.00

BRIDGE B658 WIDENING

LEGEND:

- (A) EXISTING PAVEMENT (RETAIN)
- (1) ASPHALT CONCRETE SURFACE COURSE TYPE SM-9.5D
- (2) ASPHALT CONCRETE INTERMEDIATE COURSE TYPE IM-19.0A
- (3) ASPHALT CONCRETE BASE MATERIAL, TYPE BM-25.0
- (4) AGGREGATE BASE MATERIAL, TYPE I, SIZE NO. 21B
- (5) STANDARD 6" CURB AND GUTTER (CG-6)
- (6) STANDARD 6" CURB (CG-2)
- (7) STANDARD SOLID CONCRETE RAISED MEDIAN STRIP (MS-1)
- (8) STANDARD HYDRAULIC CEMENT CONCRETE SIDEWALK - 4 INCH THICK
- (9) MSE RETAINING WALL
- (10) FLEXIBLE PAVEMENT PLANING 0" - 2"
- (11) STANDARD GRAVITY WALL (RW-3)
- (12) STANDARD HANDRAIL (HR-1)
- (13) STANDARD CONCRETE MEDIAN BARRIER MB-7F
- (14) STANDARD CONCRETE MEDIAN BARRIER MB-7F WITH MOMENT SLAB
- (15) STANDARD BRIDGE RAIL BR27C
- (16) STANDARD UNDERDRAIN UD-4
- (17) STANDARD PEDESTRIAN FENCE TYPE B
- (18) STANDARD PEDESTRIAN FENCE TYPE C
- (19) STANDARD UNDERDRAIN UD-2
- (20) REMOVE EXIST. BARRIER WALL
- (21) STANDARD UNDERDRAIN UD-3

THESE PLANS ARE UNFINISHED AND UNAPPROVED AND ARE NOT TO BE USED FOR ANY TYPE OF CONSTRUCTION OR THE ACQUISITION OF RIGHT OF WAY.

PLAN NO.	PROJECT	SHEET NO.
	8102 - 029 - 065	2A(1)

PROJECT MANAGER Sung S. Shin, PE (703) 877-5753
DESIGN SUPERVISED BY John M. McDowell, PE (703) 246-0028 (RKK)
DESIGNED BY Rummel, Klepper & Kahl, LLP (703) 246-0028

TYPICAL SECTIONS

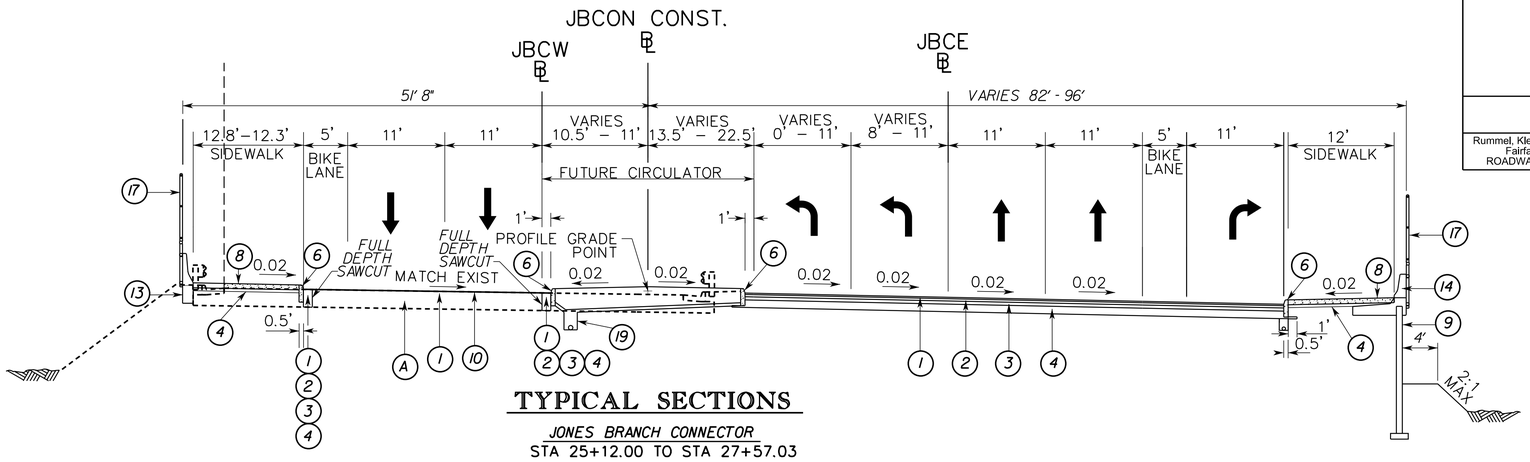

TYPICAL SECTIONS

JONES BRANCH CONNECTOR
STA 25+12.00 TO STA 27+57.03

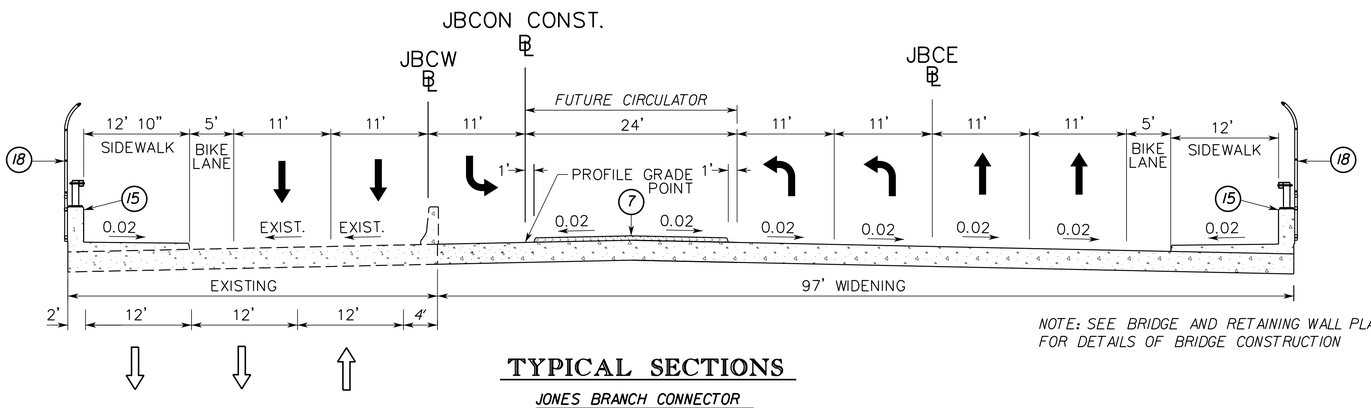

NOTE: SEE BRIDGE AND RETAINING WALL PLANS FOR DETAILS OF BRIDGE CONSTRUCTION

TYPICAL SECTIONS

JONES BRANCH CONNECTOR
STA 27+57.03 TO STA 28+87.06
BRIDGE B628 WIDENING

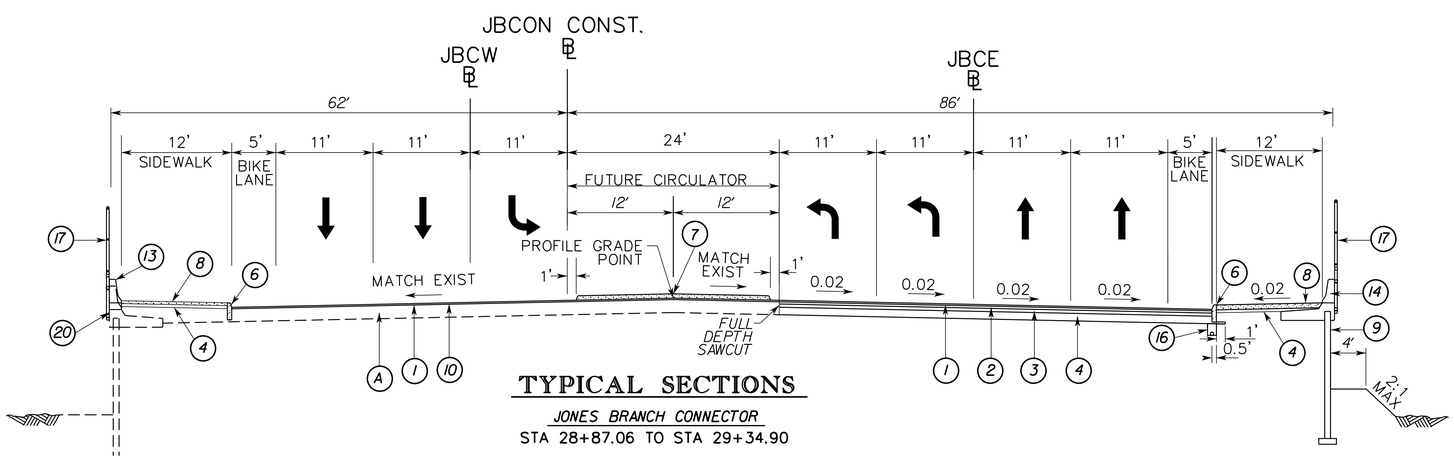

TYPICAL SECTIONS

JONES BRANCH CONNECTOR
STA 28+87.06 TO STA 29+34.90

REVISED	STATE	STATE ROUTE	STATE PROJECT	SHEET NO.
	VA.		8102 - 029 - 065	2A(2)

Rummel, Klepper & Kahl, LLP
Fairfax, Virginia
ROADWAY ENGINEER

VDOT Materials
Fairfax, Virginia
MATERIALS ENGINEER

DESIGN FEATURES RELATING TO CONSTRUCTION OR TO REGULATION AND CONTROL OF TRAFFIC MAY BE SUBJECT TO CHANGE AS DEEMED NECESSARY BY THE DEPARTMENT.

NOTE: THE LANE CONFIGURATION AND STORAGE LENGTH DEDICATED TO BE FINALIZED BASED ON THE DETAILED TRAFFIC ANALYSIS RESULTS.

LEGEND:

- (A) EXISTING PAVEMENT (RETAIN)
- (1) ASPHALT CONCRETE SURFACE COURSE TYPE SM-9.5D
- (2) ASPHALT CONCRETE INTERMEDIATE COURSE TYPE IM-19.0A
- (3) ASPHALT CONCRETE BASE MATERIAL, TYPE BM-25.0
- (4) AGGREGATE BASE MATERIAL, TYPE I, SIZE NO. 21B
- (5) STANDARD 6" CURB AND GUTTER (CG-6)
- (6) STANDARD 6" CURB (CG-2)
- (7) STANDARD SOLID CONCRETE RAISED MEDIAN STRIP (MS-1)
- (8) STANDARD HYDRAULIC CEMENT CONCRETE SIDEWALK - 4 INCH THICK
- (9) MSE RETAINING WALL
- (10) FLEXIBLE PAVEMENT PLANING 0" - 2"
- (11) STANDARD GRAVITY WALL (RW-3)
- (12) STANDARD HANDRAIL (HR-1)
- (13) STANDARD CONCRETE MEDIAN BARRIER MB-7F
- (14) STANDARD CONCRETE MEDIAN BARRIER MB-7F WITH MOMENT SLAB
- (15) STANDARD BRIDGE RAIL BR27C
- (16) STANDARD UNDERDRAIN UD-4
- (17) STANDARD PEDESTRIAN FENCE TYPE B
- (18) STANDARD PEDESTRIAN FENCE TYPE C
- (19) STANDARD UNDERDRAIN UD-2
- (20) REMOVE EXIST. BARRIER WALL

THESE PLANS ARE UNFINISHED AND UNAPPROVED AND ARE NOT TO BE USED FOR ANY TYPE OF CONSTRUCTION OR THE ACQUISITION OF RIGHT OF WAY.

PLAN NO.	PROJECT	SHEET NO.
	8102 - 029 - 065	2A(2)

PROJECT MANAGER Sung S. Shin, PE (703) 877-5753
DESIGN SUPERVISED BY John M. McDowell, PE (703) 246-0028 (RKK)
DESIGNED BY Rummel, Klepper & Kahl, LLP (703) 246-0028

REVISED	STATE	STATE ROUTE	STATE PROJECT	SHEET NO
	VA.		8102 - 029 - 065	2A(3)

Rummel, Klepper & Kahl, LLP
Fairfax, Virginia
ROADWAY ENGINEER

VDOT Materials
Fairfax, Virginia
MATERIALS ENGINEER

DESIGN FEATURES RELATING TO CONSTRUCTION OR TO REGULATION AND CONTROL OF TRAFFIC MAY BE SUBJECT TO CHANGE AS DEEMED NECESSARY BY THE DEPARTMENT.

NOTE: THE LANE CONFIGURATION AND STORAGE LENGTH DEDICATED TO BE FINALIZED BASED ON THE DETAILED TRAFFIC ANALYSIS RESULTS.

TYPICAL SECTIONS

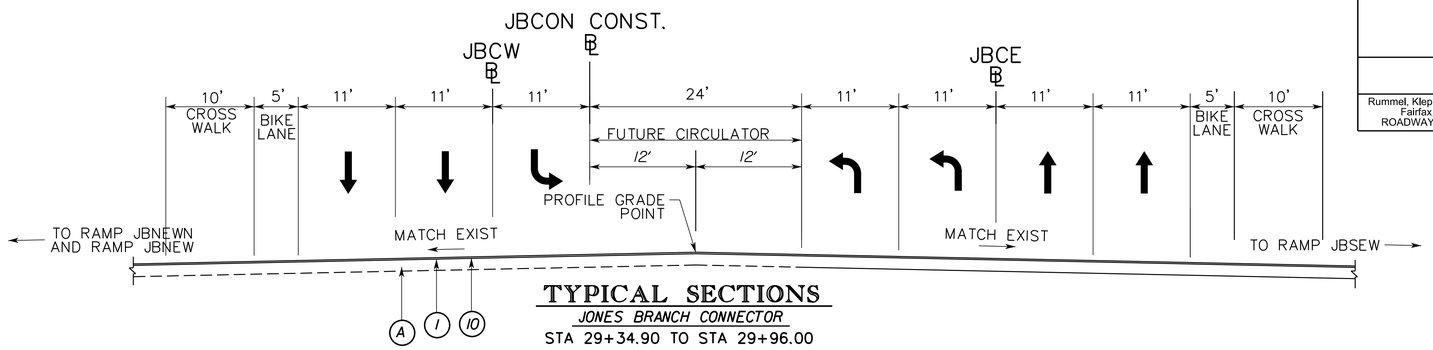

TYPICAL SECTIONS

JONES BRANCH CONNECTOR

STA 29+34.90 TO STA 29+96.00

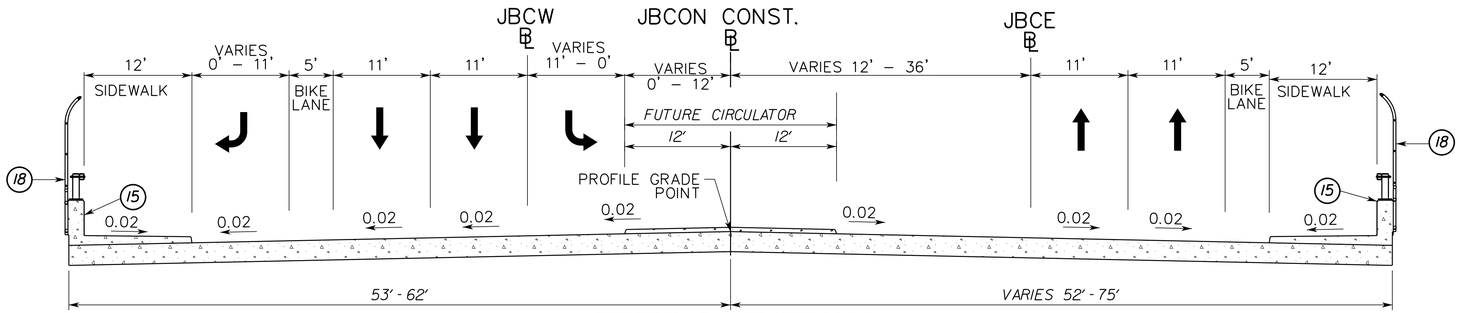

TYPICAL SECTIONS

JONES BRANCH CONNECTOR

STA 29+96.00 TO STA 34+12.00
NEW BRIDGE OVER I-495

NOTE: SEE BRIDGE AND RETAINING WALL PLANS FOR DETAILS OF BRIDGE CONSTRUCTION

LEGEND:

- (A) EXISTING PAVEMENT (RETAIN)
- (1) ASPHALT CONCRETE SURFACE COURSE TYPE SM-9.5D
- (2) ASPHALT CONCRETE INTERMEDIATE COURSE TYPE IM-19.0A
- (3) ASPHALT CONCRETE BASE MATERIAL,TYPE BM-25.0
- (4) AGGREGATE BASE MATERIAL,TYPE I,SIZE NO.21B
- (5) STANDARD 6" CURB AND GUTTER (CG-6)
- (6) STANDARD 6" CURB (CG-2)
- (7) STANDARD SOLID CONCRETE RAISED MEDIAN STRIP (MS-1)
- (8) STANDARD HYDRAULIC CEMENT CONCRETE SIDEWALK - 4 INCH THICK
- (9) MSE RETAINING WALL
- (10) FLEXIBLE PAVEMENT PLANING 0" - 2"
- (11) STANDARD GRAVITY WALL (RW-3)
- (12) STANDARD HANDRAIL (HR-1)
- (13) STANDARD CONCRETE MEDIAN BARRIER MB-7F
- (14) STANDARD CONCRETE MEDIAN BARRIER MB-7F WITH MOMENT SLAB
- (15) STANDARD BRIDGE RAIL BR27C
- (16) STANDARD UNDERDRAIN UD-4
- (17) STANDARD PEDESTRIAN FENCE TYPE B
- (18) STANDARD PEDESTRIAN FENCE TYPE C
- (19) STANDARD UNDERDRAIN UD-2
- (20) REMOVE EXIST. BARRIER WALL
- (21) STANDARD UNDERDRAIN UD-3

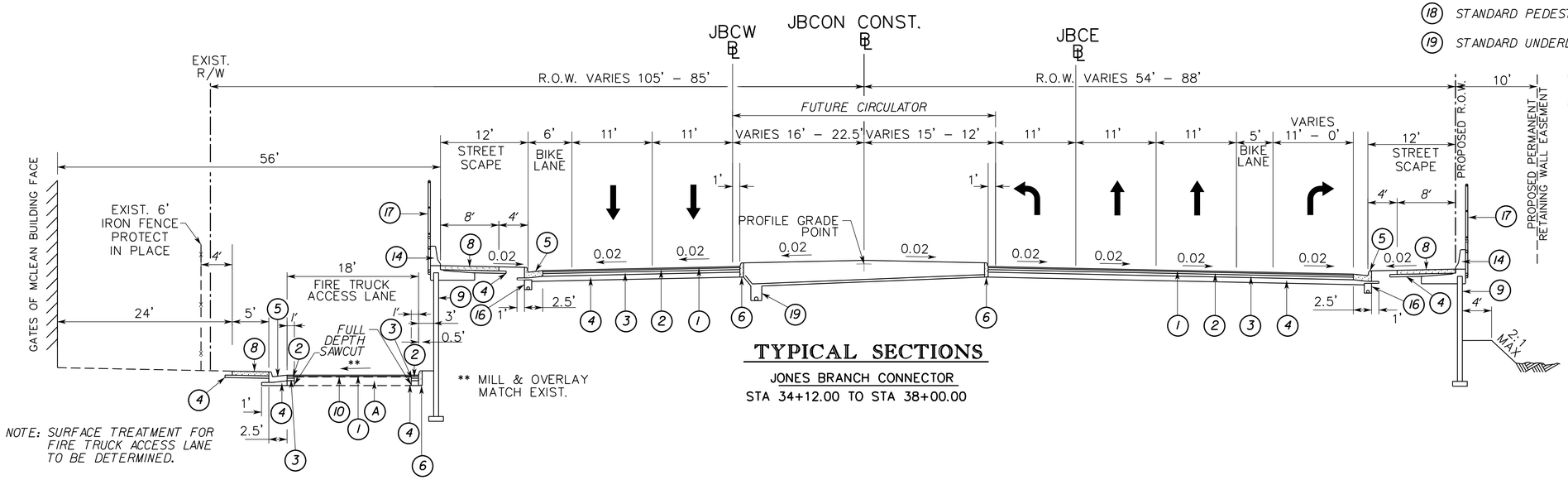

TYPICAL SECTIONS

JONES BRANCH CONNECTOR

STA 34+12.00 TO STA 38+00.00

NOTE: SURFACE TREATMENT FOR FIRE TRUCK ACCESS LANE TO BE DETERMINED.

THESE PLANS ARE UNFINISHED AND UNAPPROVED AND ARE NOT TO BE USED FOR ANY TYPE OF CONSTRUCTION OR THE ACQUISITION OF RIGHT OF WAY.

PLAN NO.	PROJECT	SHEET NO.
	8102 - 029 - 065	2A(3)

PROJECT MANAGER Sung S.Shin, PE (703) 877-5753
DESIGN SUPERVISED BY John M.McDowell, PE (703) 246-0028 (RKK)
DESIGNED BY Rummel, Klepper & Kahl, LLP (703) 246-0028

REVISED	STATE	STATE ROUTE	STATE PROJECT	SHEET NO
	VA.		8102 - 029 - 065	2A(4)

Rummel, Klepper & Kahl, LLP
Fairfax, Virginia
ROADWAY ENGINEER

VDOT Materials
Fairfax, Virginia
MATERIALS ENGINEER

DESIGN FEATURES RELATING TO CONSTRUCTION OR TO REGULATION AND CONTROL OF TRAFFIC MAY BE SUBJECT TO CHANGE AS DEEMED NECESSARY BY THE DEPARTMENT.

NOTE: THE LANE CONFIGURATION AND STORAGE LENGTH DEDICATED TO BE FINALIZED BASED ON THE DETAILED TRAFFIC ANALYSIS RESULTS.

TYPICAL SECTIONS

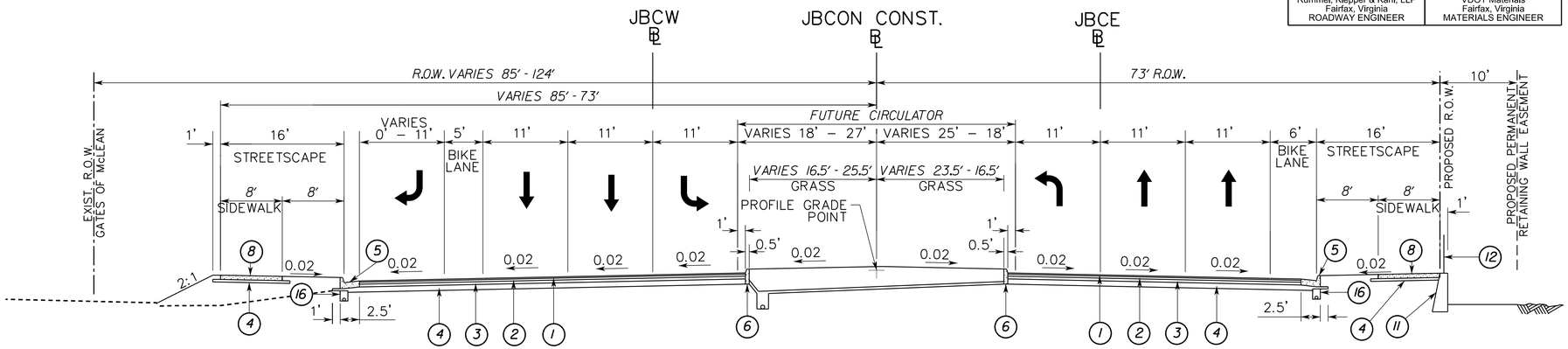

TYPICAL SECTIONS

JONES BRANCH CONNECTOR

STA 38+00.00 TO STA 42+00.00

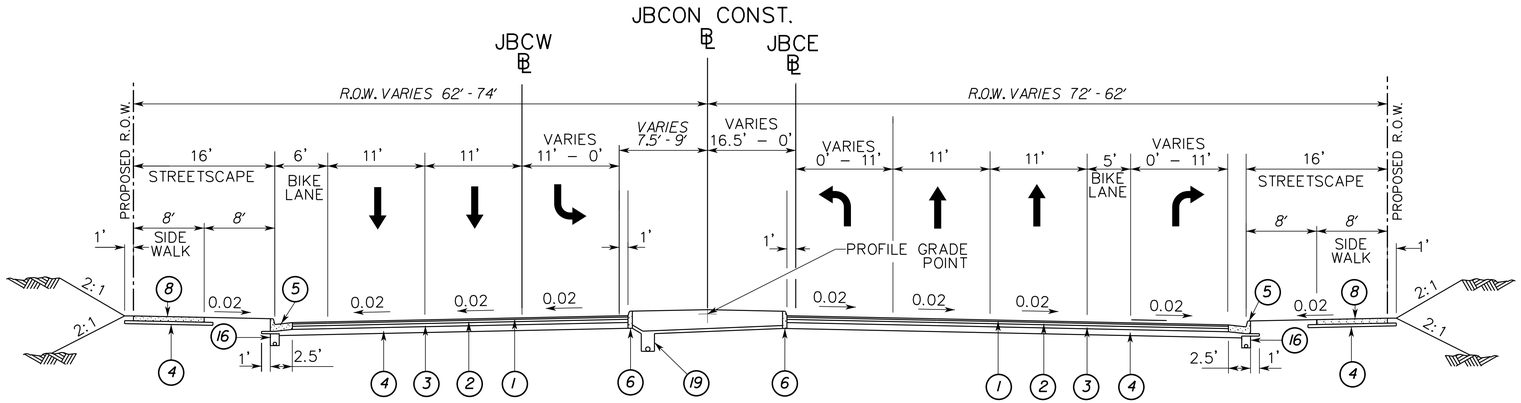

TYPICAL SECTIONS

JONES BRANCH CONNECTOR

STA 42+00.00 TO STA 44+40.00

LEGEND:

(A) EXISTING PAVEMENT (RETAIN)
(1) ASPHALT CONCRETE SURFACE COURSE TYPE SM-9.5D
(2) ASPHALT CONCRETE INTERMEDIATE COURSE TYPE IM-19.0A
(3) ASPHALT CONCRETE BASE MATERIAL,TYPE BM-25.0
(4) AGGREGATE BASE MATERIAL,TYPE I,SIZE NO.21B
(5) STANDARD 6" CURB AND GUTTER (CG-6)
(6) STANDARD 6" CURB (CG-2)
(7) STANDARD SOLID CONCRETE RAISED MEDIAN STRIP (MS-1)
(8) STANDARD HYDRAULIC CEMENT CONCRETE SIDEWALK - 4 INCH THICK
(9) MSE RETAINING WALL
(10) FLEXIBLE PAVEMENT PLANING 0" - 2"
(11) STANDARD GRAVITY WALL (RW-3)
(12) STANDARD HANDRAIL (HR-1)
(13) STANDARD CONCRETE MEDIAN BARRIER MB-7F
(14) STANDARD CONCRETE MEDIAN BARRIER MB-7F WITH MOMENT SLAB
(15) STANDARD BRIDGE RAIL BR27C
(16) STANDARD UNDERDRAIN UD-4
(17) STANDARD PEDESTRIAN FENCE TYPE B
(18) STANDARD PEDESTRIAN FENCE TYPE C
(19) STANDARD UNDERDRAIN UD-2
(20) REMOVE EXIST. BARRIER WALL
(21) STANDARD UNDERDRAIN UD-3

THESE PLANS ARE UNFINISHED AND UNAPPROVED AND ARE NOT TO BE USED FOR ANY TYPE OF CONSTRUCTION OR THE ACQUISITION OF RIGHT OF WAY.

PLAN NO.	PROJECT	SHEET NO.
	8102 - 029 - 065	2A(4)

PROJECT MANAGER Sung S. Shin, PE (703) 877-5753
DESIGN SUPERVISED BY John M. McDowell, PE (703) 246-0028 (RKK)
DESIGNED BY Rummel, Klepper & Kahl, LLP (703) 246-0028

TYPICAL SECTIONS

REVISED	STATE	STATE ROUTE	STATE PROJECT	SHEET NO
	VA.		8102 - 029 - 065	2A(5)

Rummel, Klepper & Kahl, LLP
Fairfax, Virginia
ROADWAY ENGINEER

VDOT Materials
Fairfax, Virginia
MATERIALS ENGINEER

DESIGN FEATURES RELATING TO CONSTRUCTION OR TO REGULATION AND CONTROL OF TRAFFIC MAY BE SUBJECT TO CHANGE AS DEEMED NECESSARY BY THE DEPARTMENT.

NOTE: THE LANE CONFIGURATION AND STORAGE LENGTH DEDICATED TO BE FINALIZED BASED ON THE DETAILED TRAFFIC ANALYSIS RESULTS.

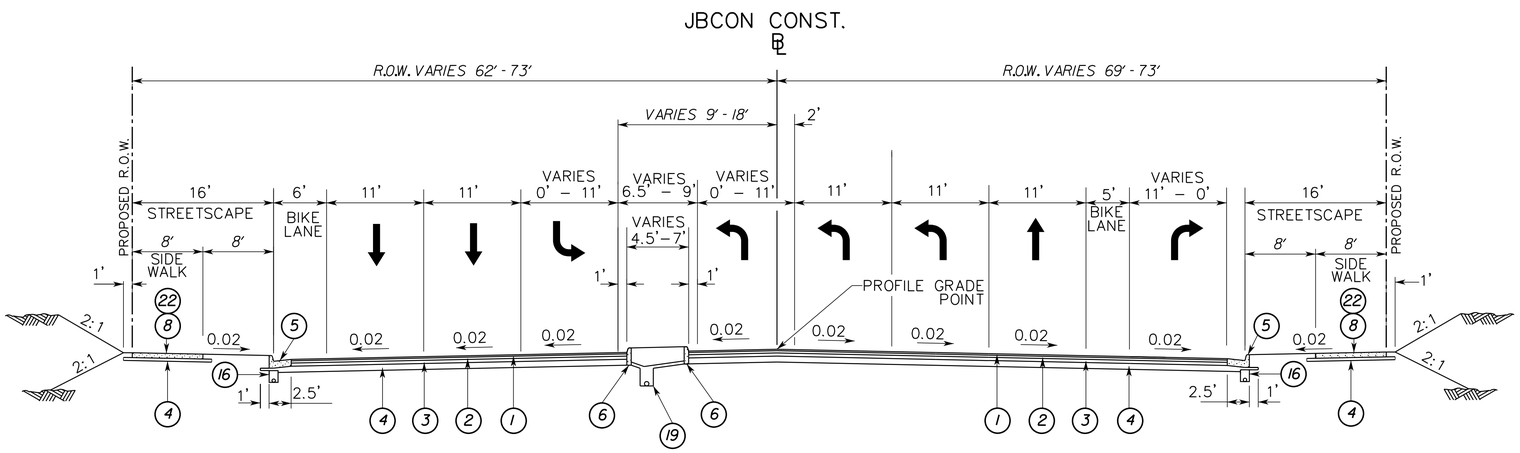

TYPICAL SECTIONS

JONES BRANCH CONNECTOR

STA 44+40.00 TO STA 47+04.00

LEGEND:

(A) EXISTING PAVEMENT (RETAIN)
(1) ASPHALT CONCRETE SURFACE COURSE TYPE SM-9.5D
(2) ASPHALT CONCRETE INTERMEDIATE COURSE TYPE IM-19.0A
(3) ASPHALT CONCRETE BASE MATERIAL,TYPE BM-25.0
(4) AGGREGATE BASE MATERIAL,TYPE I,SIZE NO.21B
(5) STANDARD 6" CURB AND GUTTER (CG-6)
(6) STANDARD 6" CURB (CG-2)
(7) STANDARD SOLID CONCRETE RAISED MEDIAN STRIP (MS-1)
(8) STANDARD HYDRAULIC CEMENT CONCRETE SIDEWALK - 4 INCH THICK
(9) MSE RETAINING WALL
(10) FLEXIBLE PAVEMENT PLANING 0" - 2"
(11) STANDARD GRAVITY WALL (RW-3)
(12) STANDARD HANDRAIL (HR-1)
(13) STANDARD CONCRETE MEDIAN BARRIER MB-7F
(14) STANDARD CONCRETE MEDIAN BARRIER MB-7F WITH MOMENT SLAB
(15) STANDARD BRIDGE RAIL BR27C
(16) STANDARD UNDERDRAIN UD-4
(17) STANDARD PEDESTRIAN FENCE TYPE B
(18) STANDARD PEDESTRIAN FENCE TYPE C
(19) STANDARD UNDERDRAIN UD-2
(20) REMOVE EXIST. BARRIER WALL
(21) STANDARD UNDERDRAIN UD-3
(22) STANDARD HYDRAULIC CEMENT CONCRETE SIDEWALK - 6" THICK (STA.46+00 LT TO STA.47+04 LT AND STA.45+85 RT TO STA 47+04 RT)

THESE PLANS ARE UNFINISHED AND UNAPPROVED AND ARE NOT TO BE USED FOR ANY TYPE OF CONSTRUCTION OR THE ACQUISITION OF RIGHT OF WAY.

PLAN NO.	PROJECT	SHEET NO.
	8102 - 029 - 065	2A(5)

PROJECT MANAGER Sung S. Shin, PE (703) 877-5753
DESIGN SUPERVISED BY John M. McDowell, PE (703) 246-0028 (RKK)
DESIGNED BY Rummel, Klepper & Kahl, LLP (703) 246-0028

TYPICAL SECTIONS

REVISED	STATE	STATE ROUTE	STATE PROJECT	SHEET NO
	VA.		8102 - 029 - 065	2A(6)

Rummel, Klepper & Kahl, LLP Fairfax, Virginia ROADWAY ENGINEER	VDOT Materials Fairfax, Virginia MATERIALS ENGINEER

DESIGN FEATURES RELATING TO CONSTRUCTION OR TO REGULATION AND CONTROL OF TRAFFIC MAY BE SUBJECT TO CHANGE AS DEEMED NECESSARY BY THE DEPARTMENT.

NOTE: THE LANE CONFIGURATION AND STORAGE LENGTH DEDICATED TO BE FINALIZED BASED ON THE DETAILED TRAFFIC ANALYSIS RESULTS.

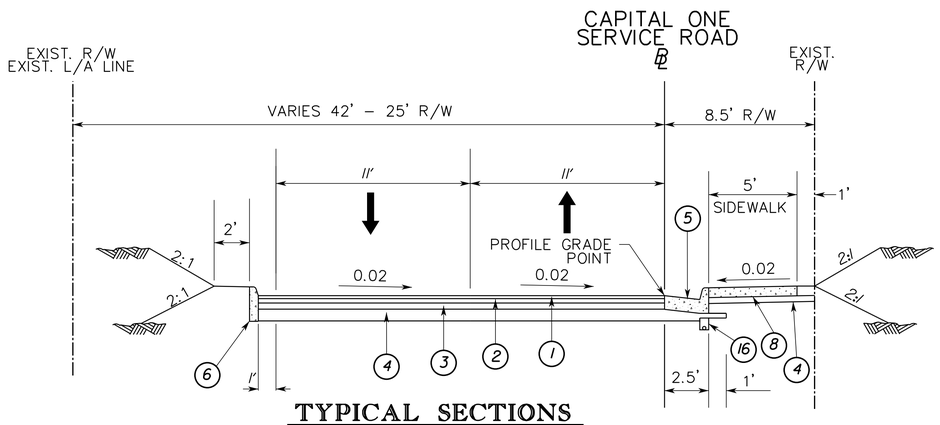

TYPICAL SECTIONS

CAPITAL ONE SERVICE ROAD

STA. 37+88.57 TO STA. 44+92.73

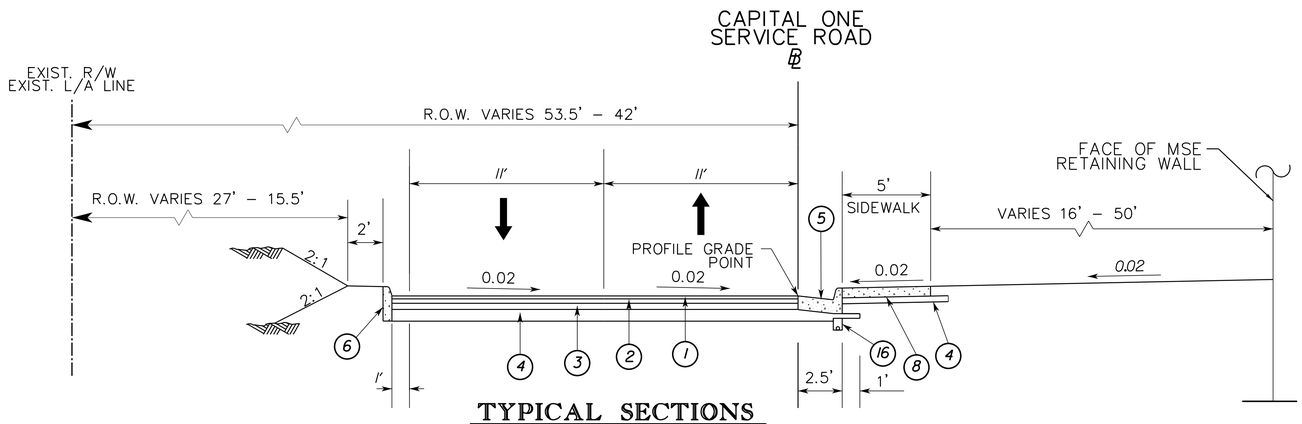

TYPICAL SECTIONS

CAPITAL ONE SERVICE ROAD

STA. 44+92.73 TO STA. 46+02.91

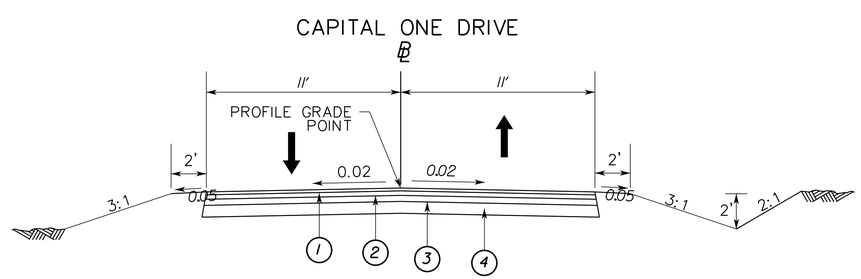

TYPICAL SECTIONS

CAPITAL ONE DRIVE

STA. 14+62.47 TO STA. 19+05.74

LEGEND:

(A) EXISTING PAVEMENT (RETAIN)
(1) ASPHALT CONCRETE SURFACE COURSE TYPE SM-9.5D
(2) ASPHALT CONCRETE INTERMEDIATE COURSE TYPE IM-19.0A
(3) ASPHALT CONCRETE BASE MATERIAL, TYPE BM-25.0
(4) AGGREGATE BASE MATERIAL, TYPE I, SIZE NO. 21B
(5) STANDARD 6" CURB AND GUTTER (CG-6)
(6) STANDARD 6" CURB (CG-2)
(7) STANDARD SOLID CONCRETE RAISED MEDIAN STRIP (MS-1)
(8) STANDARD HYDRAULIC CEMENT CONCRETE SIDEWALK - 4 INCH THICK
(9) MSE RETAINING WALL
(10) FLEXIBLE PAVEMENT PLANING 0" - 2"
(11) STANDARD GRAVITY WALL (RW-3)
(12) STANDARD HANDRAIL (HR-1)
(13) STANDARD CONCRETE MEDIAN BARRIER MB-7F
(14) STANDARD CONCRETE MEDIAN BARRIER MB-7F WITH MOMENT SLAB
(15) STANDARD BRIDGE RAIL BR27C
(16) STANDARD UNDERDRAIN UD-4
(17) STANDARD PEDESTRIAN FENCE TYPE B
(18) STANDARD PEDESTRIAN FENCE TYPE C
(19) STANDARD UNDERDRAIN UD-2
(20) REMOVE EXIST. BARRIER WALL
(21) STANDARD UNDERDRAIN UD-3

THESE PLANS ARE UNFINISHED AND UNAPPROVED AND ARE NOT TO BE USED FOR ANY TYPE OF CONSTRUCTION OR THE ACQUISITION OF RIGHT OF WAY.

PLAN NO.	PROJECT	SHEET NO.
	8102 - 029 - 065	2A(6)

PROJECT MANAGER Sung S. Shin, PE (703) 877-5753
DESIGN SUPERVISED BY John M. McDowell, PE (703) 246-0028 (RKK)
DESIGNED BY Rummel, Klepper & Kahl, LLP (703) 246-0028

TYPICAL SECTIONS

REVISED	STATE	STATE ROUTE	STATE PROJECT	SHEET NO
	VA.		8102 - 029 - 065	2A(7)

Rummel, Klepper & Kahl, LLP
Fairfax, Virginia
ROADWAY ENGINEER

VDOT Materials
Fairfax, Virginia
MATERIALS ENGINEER

DESIGN FEATURES RELATING TO CONSTRUCTION OR TO REGULATION AND CONTROL OF TRAFFIC MAY BE SUBJECT TO CHANGE AS DEEMED NECESSARY BY THE DEPARTMENT.

NOTE: THE LANE CONFIGURATION AND STORAGE LENGTH DEDICATED TO BE FINALIZED BASED ON THE DETAILED TRAFFIC ANALYSIS RESULTS.

NOTE: DESIGN EXCEPTION REQUIRED FOR SHOULDER WIDTHS ON JBEWN

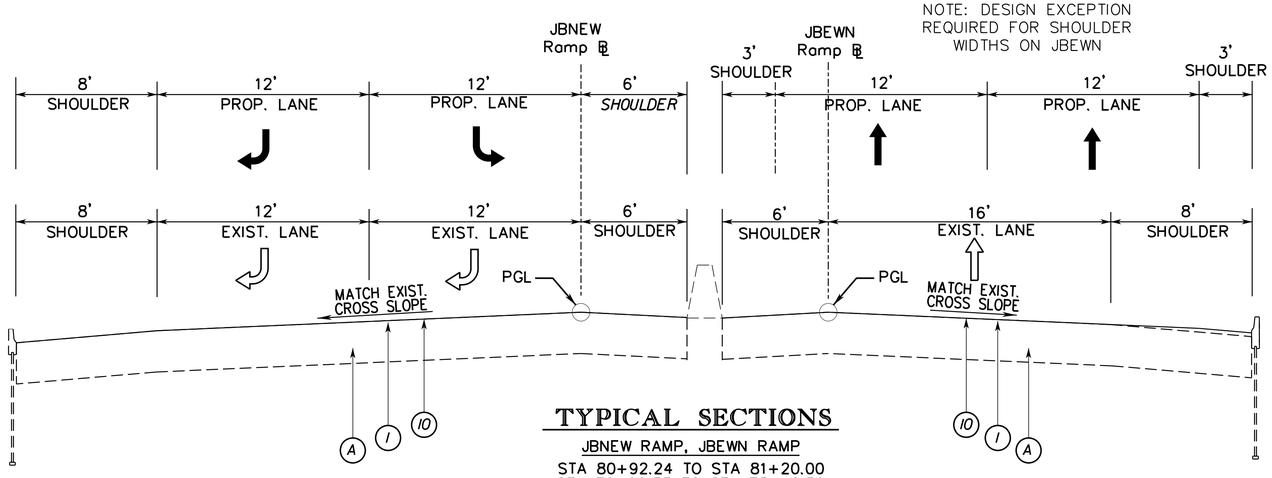

TYPICAL SECTIONS

JBNEW RAMP, JBEWN RAMP

STA 80+92.24 TO STA 81+20.00
STA 70+96.33 TO STA 73+46.50

LEGEND:

(A) EXISTING PAVEMENT (RETAIN)
(1) ASPHALT CONCRETE SURFACE COURSE TYPE SM-9.5D
(2) ASPHALT CONCRETE INTERMEDIATE COURSE TYPE IM-19.0A
(3) ASPHALT CONCRETE BASE MATERIAL, TYPE BM-25.0
(4) AGGREGATE BASE MATERIAL, TYPE I, SIZE NO. 21B
(5) STANDARD 6" CURB AND GUTTER (CG-6)
(6) STANDARD 6" CURB (CG-2)
(7) STANDARD SOLID CONCRETE RAISED MEDIAN STRIP (MS-1)
(8) STANDARD HYDRAULIC CEMENT CONCRETE SIDEWALK - 4 INCH THICK
(9) MSE RETAINING WALL
(10) FLEXIBLE PAVEMENT PLANING 0" - 2"
(11) STANDARD GRAVITY WALL (RW-3)
(12) STANDARD HANDRAIL (HR-1)
(13) STANDARD CONCRETE MEDIAN BARRIER MB-7F
(14) STANDARD CONCRETE MEDIAN BARRIER MB-7F WITH MOMENT SLAB
(15) STANDARD BRIDGE RAIL BR27C
(16) STANDARD UNDERDRAIN UD-4
(17) STANDARD PEDESTRIAN FENCE TYPE B
(18) STANDARD PEDESTRIAN FENCE TYPE C
(19) STANDARD UNDERDRAIN UD-2
(20) REMOVE EXIST. BARRIER WALL
(21) STANDARD UNDERDRAIN UD-3

THESE PLANS ARE UNFINISHED AND UNAPPROVED AND ARE NOT TO BE USED FOR ANY TYPE OF CONSTRUCTION OR THE ACQUISITION OF RIGHT OF WAY.

PLAN NO.	PROJECT	SHEET NO.
	8102 - 029 - 065	2A(7)

PROJECT MANAGER Sung S. Shin, PE (703) 877-5753
DESIGN SUPERVISED BY John M. McDowell, PE (703) 246-0028 (RKK)
DESIGNED BY Rummel, Klepper & Kahl, LLP (703) 246-0028

Rummel, Klepper & Kahl, LLP Fairfax, Virginia ROADWAY ENGINEER	Rummel, Klepper & Kahl, LLP Fairfax, Virginia HYDRAULIC ENGINEER

REVISED	STATE	STATE ROUTE	STATE PROJECT	SHEET NO
	VA.		8102 - 029 - 065	3

DESIGN FEATURES RELATING TO CONSTRUCTION OR TO REGULATION AND CONTROL OF TRAFFIC MAY BE SUBJECT TO CHANGE AS DEEMED NECESSARY BY THE DEPARTMENT.

NOTE: THE LANE CONFIGURATION AND STORAGE LENGTH DEDICATED TO BE FINALIZED BASED ON THE DETAILED TRAFFIC ANALYSIS RESULTS.

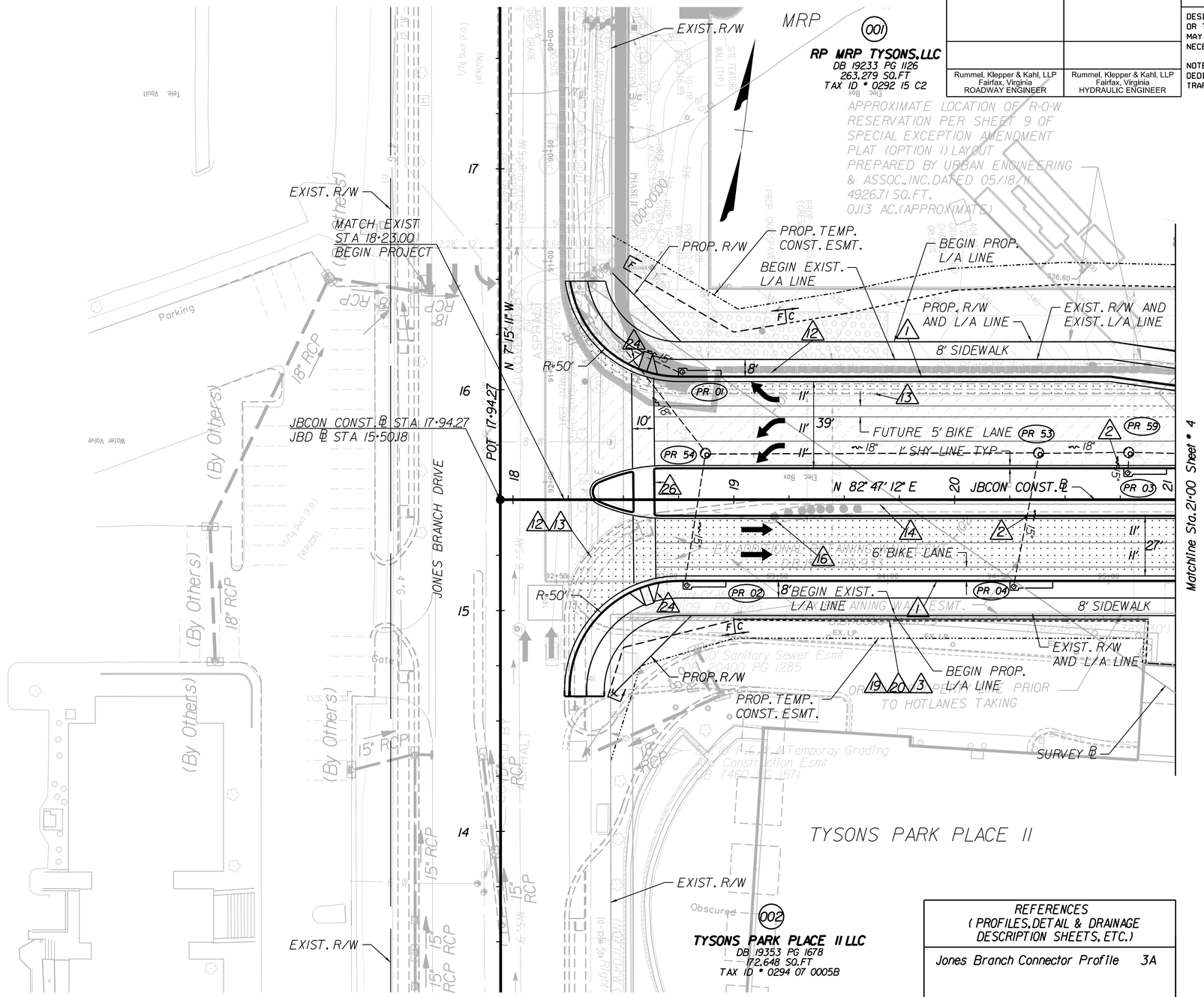

NOTE: See Sheet 1M for Incidental Legend

LEGEND

- C — Denotes Construction Limits In Cuts
- F — Denotes Construction Limits In Fills
- Denotes Temporary Easement
- Denotes Permanent Easement
- Denotes Demolition of Pavement
- Denotes Proposed Pavement
- Denotes Mill & Overlay Pavement
- Denotes Existing Bridge
- Denotes Proposed Bridge

REFERENCES (PROFILES, DETAIL & DRAINAGE DESCRIPTION SHEETS, ETC.)	
Jones Branch Connector Profile	3A

NOTE: FEATURES SHOWN AS TOPO ON THIS SHEET ARE BASED ON CONSTRUCTION PLANS FOR "I-495 HOT LANES - SECTION 7," DATED APRIL 13, 2010 AND ARE NOT AS-BUILT

THESE PLANS ARE UNFINISHED AND UNAPPROVED AND ARE NOT TO BE USED FOR ANY TYPE OF CONSTRUCTION OR THE ACQUISITION OF RIGHT OF WAY.

SCALE 0 25' 50'

PLAN NO.	PROJECT	SHEET NO.
	8102 - 029 - 065	3

PROJECT MANAGER Sung S. Shin, PE (703) 877-5753
SURVEYED BY <Surveyor Name (000) 000-0000 (District)>
DESIGN SUPERVISED BY John M. McDowell, P.E. (703) 246-0028 (RKK)
DESIGN BY Rummel, Klepper & Kahl, LLP (703) 246-0028

REVISED	STATE	STATE ROUTE	STATE PROJECT	SHEET NO.
	VA.	·	·	3A

DESIGN FEATURES RELATING TO CONSTRUCTION OR TO REGULATION AND CONTROL OF TRAFFIC MAY BE SUBJECT TO CHANGE AS DEEMED NECESSARY BY THE DEPARTMENT

NOTE: FEATURES SHOWN AS TOPO ON THIS SHEET ARE BASED ON CONSTRUCTION PLANS FOR "I-495 HOT LANES - SECTION 7," DATED APRIL 13, 2010 AND ARE NOT AS-BUILT

THESE PLANS ARE UNFINISHED AND UNAPPROVED AND ARE NOT TO BE USED FOR ANY TYPE OF CONSTRUCTION OR THE ACQUISITION OF RIGHT OF WAY.

Rummel, Klepper & Kahl, LLP
Fairfax, Virginia
ROADWAY ENGINEER

JONES BRANCH CONNECTOR

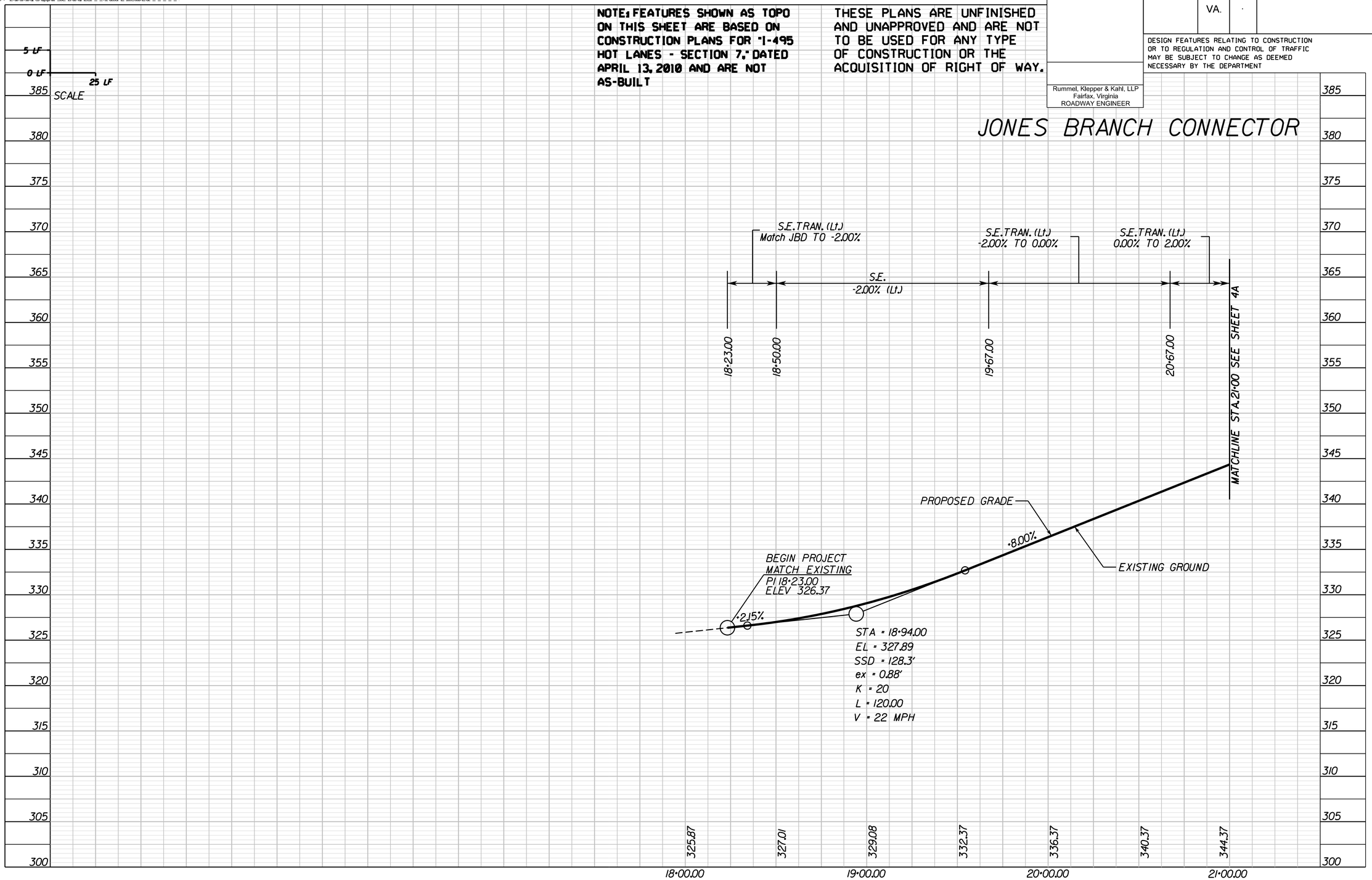

PROJECT	SHEET NO.
·	3A

1/17/2013

PROJECT MANAGER Sung S. Shin, PE (703) 877-5753
DESIGN SUPERVISED BY John M. McDowell, PE (703) 246-0028 (RKK)
DESIGNED BY Rummel, Klepper & Kahl, LLP (703) 246-0028

REVISED	STATE	STATE ROUTE	STATE PROJECT	SHEET NO
	VA.		8102 - 029 - 065	4

Rummel, Klepper & Kahl, LLP
Fairfax, Virginia
ROADWAY ENGINEER

Rummel, Klepper & Kahl, LLP
Fairfax, Virginia
HYDRAULIC ENGINEER

DESIGN FEATURES RELATING TO CONSTRUCTION OR TO REGULATION AND CONTROL OF TRAFFIC MAY BE SUBJECT TO CHANGE AS DEEMED NECESSARY BY THE DEPARTMENT.

NOTE: THE LANE CONFIGURATION AND STORAGE LENGTH DEDICATED TO BE FINALIZED BASED ON THE DETAILED TRAFFIC ANALYSIS RESULTS.

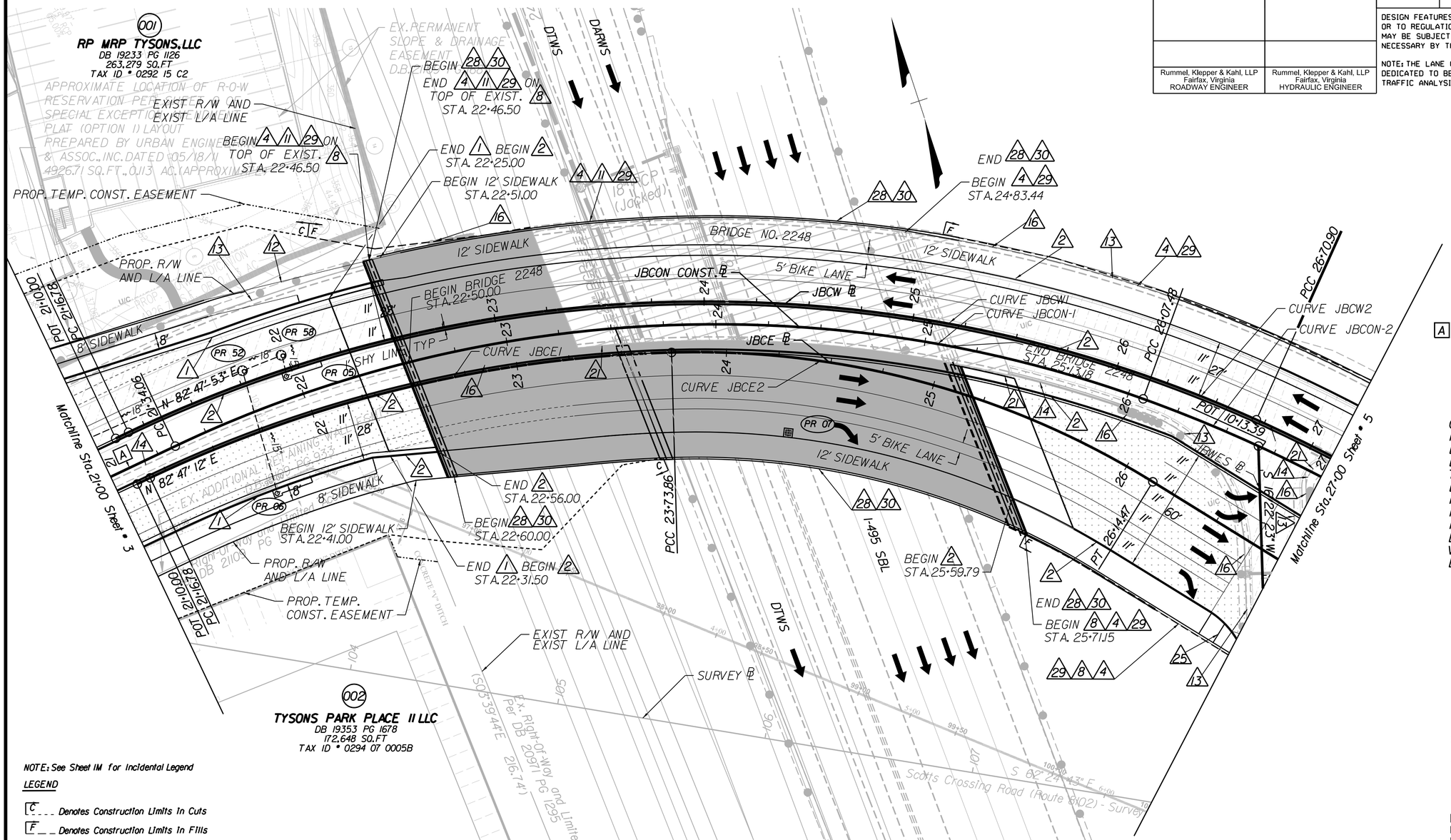

A JBCON CONST. ℄ STA. 21+10.00 = JBCE ℄ STA. 21+10.00, 8.50' RT.
JBCW ℄ STA. 21+10.00, 15.50' LT.

Curve JBCW-1
PI = 24+12.68
DELTA = 49° 45' 44.00" (RT)
D = 8° 58' 50"
T = 295.89'
L = 554.11'
R = 638.00'
PC = 21+16.78
PCC = 26+70.90
Lr = N/A
V = 30 MPH
E = NC

Curve JBCW-2
PI = 27+16.63
DELTA = 7° 29' 10.58" (RT)
D = 8° 11' 49"
T = 45.73'
L = 91.33'
R = 698.99'
PCC = 26+70.90
PT = 27+62.23
Lr = N/A
V = 30 MPH
E = NC

NOTE: See Sheet 1M for Incidental Legend

LEGEND

- C _ _ _ Denotes Construction Limits In Cuts
- F _ _ _ Denotes Construction Limits In Fills
- Denotes Temporary Easement
- Denotes Permanent Easement
- Denotes Demolition of Pavement
- Denotes Proposed Pavement
- Denotes Mill & Overlay Pavement
- Denotes Existing Bridge
- Denotes Proposed Bridge

Curve JBCON-1
PI = 23+83.87
DELTA = 45° 12' 28.81" (RT)
D = 9° 32' 57"
T = 249.81'
L = 473.42'
R = 600.00'
PC = 21+34.06
PCC = 26+07.48
Lr = 34'
V = 30 MPH
E = 2.00%

Curve JBCON-2
PI = 26+79.32
DELTA = 11° 55' 21.38" (RT)
D = 8° 19' 40"
T = 71.84'
L = 143.17'
R = 688.00'
PCC = 26+07.48
PT = 27+50.64
Lr = N/A
V = 30 MPH
E = 2.00%

Curve JBCE-1
PI = 22+47.19
DELTA = 23° 45' 25.02" (RT)
D = 9° 14' 29"
T = 130.41'
L = 257.07'
R = 620.00'
PC = 21+16.78
PCC = 23+73.86
Lr = N/A
V = 30 MPH
E = NC

Curve JBCE-2
PI = 24+97.68
DELTA = 33° 22' 25.17" (RT)
D = 13° 52' 13"
T = 123.83'
L = 240.61'
R = 413.08'
PCC = 23+73.86
PT = 26+14.47
Lr = N/A
V = 30 MPH
E = NC

REFERENCES (PROFILES, DETAIL & DRAINAGE DESCRIPTION SHEETS, ETC.)	
Jones Branch Connector Profile	4A

NOTE: FEATURES SHOWN AS TOPO ON THIS SHEET ARE BASED ON CONSTRUCTION PLANS FOR "I-495 HOT LANES - SECTION 7," DATED APRIL 13, 2010 AND ARE NOT AS-BUILT

THESE PLANS ARE UNFINISHED AND UNAPPROVED AND ARE NOT TO BE USED FOR ANY TYPE OF CONSTRUCTION OR THE ACQUISITION OF RIGHT OF WAY.

SCALE 0 25' 50'

PLAN NO.	PROJECT	SHEET NO.
	8102 - 029 - 065	4

PROJECT MANAGER Sung S. Shin, PE (703) 877-5753
SURVEYED BY ≤Surveyor Name (000) 000-0000 (District)≥
DESIGN SUPERVISED BY John M. McDowell, P.E. (703) 246-0028 (RKK)
DESIGN BY Rummel, Klepper & Kahl, LLP (703) 246-0028

REVISED	STATE	STATE ROUTE	STATE PROJECT	SHEET NO.
	VA.	·	·	4A

DESIGN FEATURES RELATING TO CONSTRUCTION OR TO REGULATION AND CONTROL OF TRAFFIC MAY BE SUBJECT TO CHANGE AS DEEMED NECESSARY BY THE DEPARTMENT

Rummel, Klepper & Kahl, LLP
Fairfax, Virginia
ROADWAY ENGINEER

NOTE: FEATURES SHOWN AS TOPO ON THIS SHEET ARE BASED ON CONSTRUCTION PLANS FOR "I-495 HOT LANES - SECTION 7," DATED APRIL 13, 2010 AND ARE NOT AS-BUILT

THESE PLANS ARE UNFINISHED AND UNAPPROVED AND ARE NOT TO BE USED FOR ANY TYPE OF CONSTRUCTION OR THE ACQUISITION OF RIGHT OF WAY.

JONES BRANCH CONNECTOR

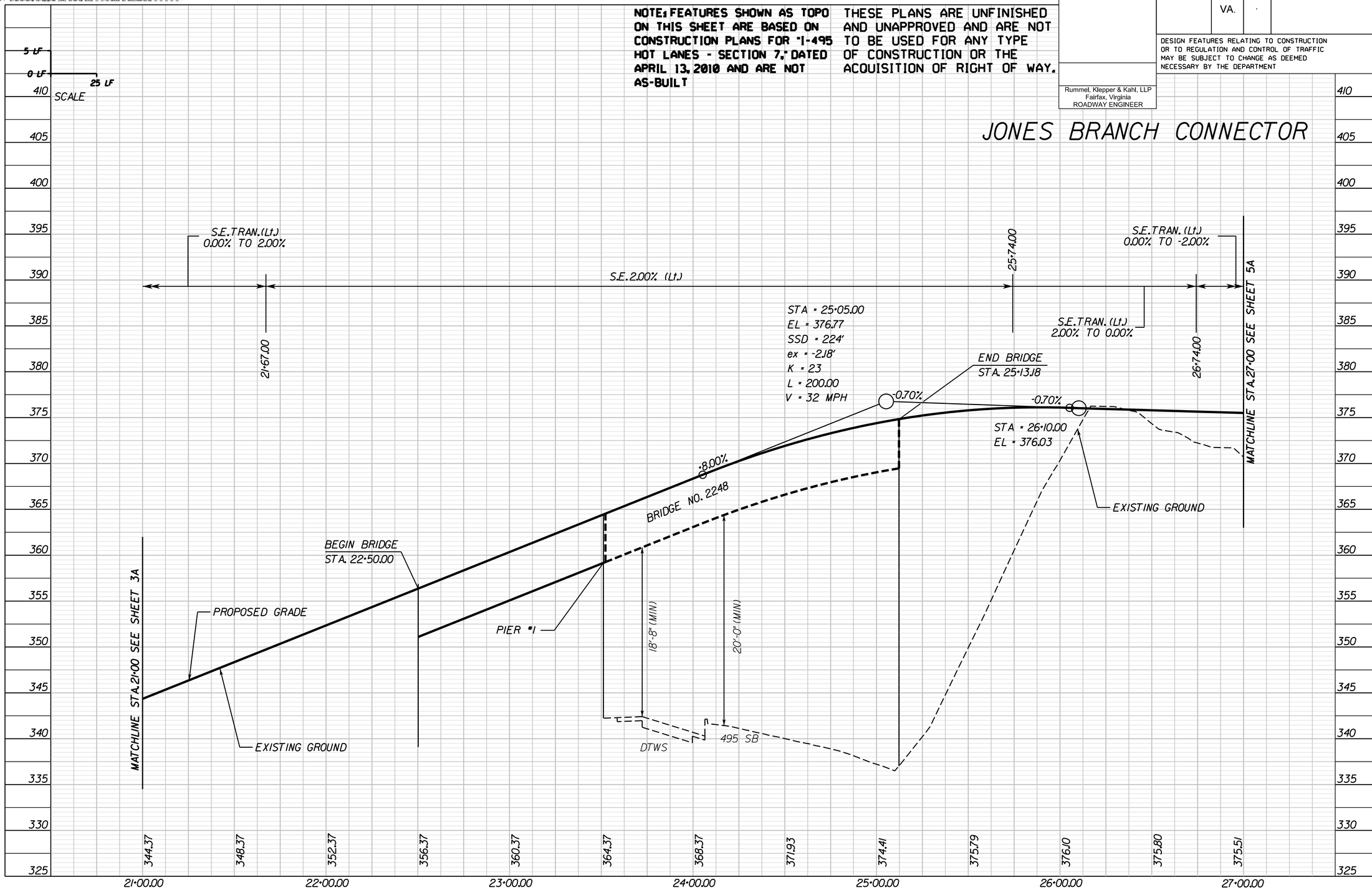

PROJECT	SHEET NO.
·	4A

1/17/2013

PROJECT MANAGER Sung S. Shin, PE (703) 877-5753
DESIGN SUPERVISED BY John M. McDowell, PE (703) 246-0028 (RKK)
DESIGNED BY Rummel, Klepper & Kahl, LLP (703) 246-0028

REVISED	STATE	STATE ROUTE	STATE PROJECT	SHEET NO
	VA.		8102 - 029 - 065	5

Rummel, Klepper & Kahl, LLP
Fairfax, Virginia
ROADWAY ENGINEER

Rummel, Klepper & Kahl, LLP
Fairfax, Virginia
HYDRAULIC ENGINEER

DESIGN FEATURES RELATING TO CONSTRUCTION OR TO REGULATION AND CONTROL OF TRAFFIC MAY BE SUBJECT TO CHANGE AS DEEMED NECESSARY BY THE DEPARTMENT.

NOTE: THE LANE CONFIGURATION AND STORAGE LENGTH DEDICATED TO BE FINALIZED BASED ON THE DETAILED TRAFFIC ANALYSIS RESULTS.

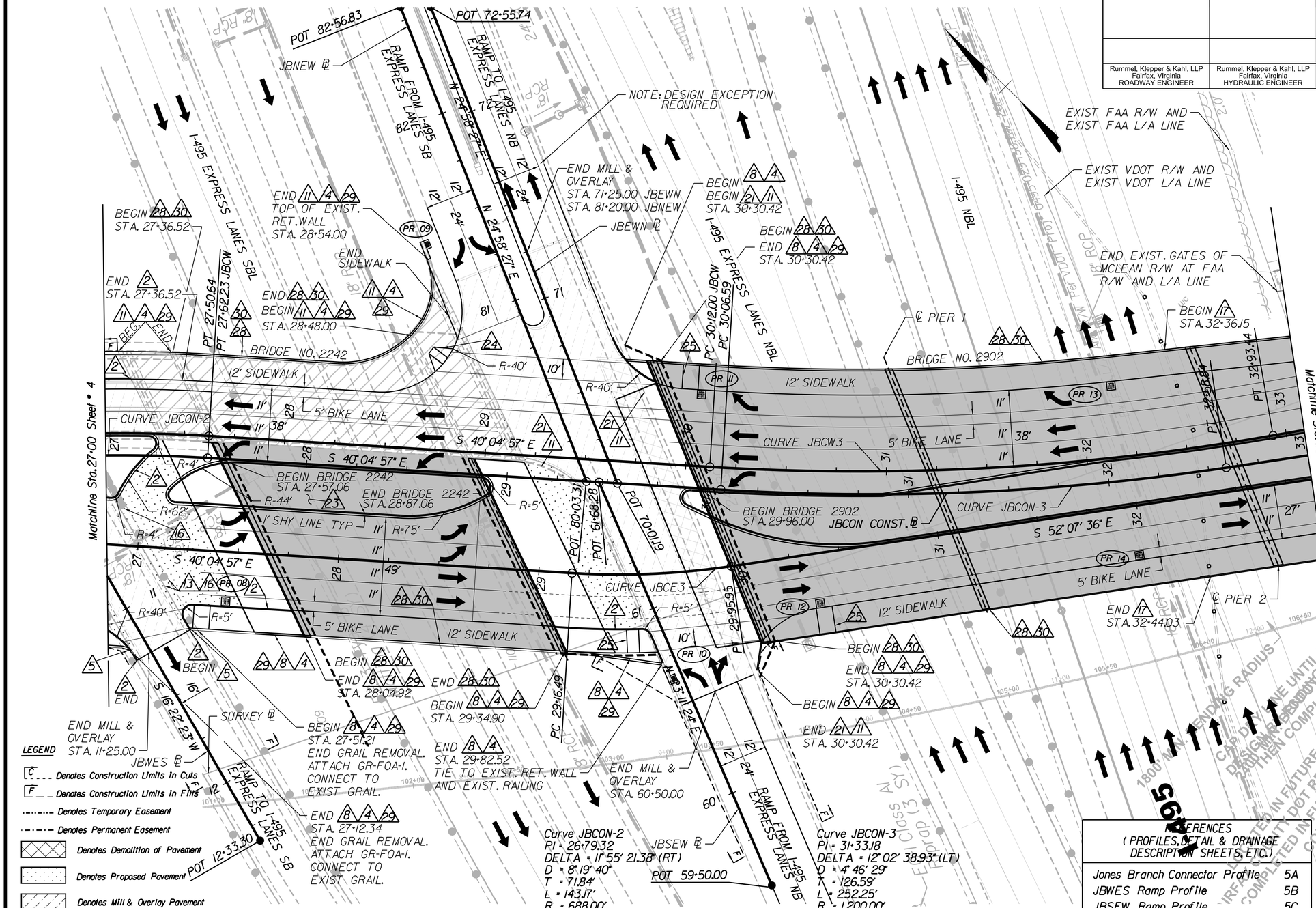

Curve JBCW-2
PI = 27+16.63
DELTA = 7° 29' 10.58" (RT)
D = 8° 11' 49"
T = 45.73'
L = 91.33'
R = 698.99'
PCC = 26+70.90
PT = 27+62.23
Lr = N/A
V = 30 MPH
E = NC

Curve JBCW-3
PI = 31+53.37
DELTA = 13° 26' 16.90" (LT)
D = 4° 46' 29"
T = 141.37'
L = 281.45'
R = 1,200.00'
PC = 30+12.00
PT = 32+93.44
Lr = N/A
V = 30 MPH
E = NC

Curve JBCE-3
PI = 29+56.37
DELTA = 12° 02' 38.93" (LT)
D = 15° 09' 27"
T = 39.88'
L = 79.46'
R = 378.00'
PC = 29+16.49
PT = 29+95.95
Lr = N/A
V = 30 MPH
E = NC

Curve JBCON-2
PI = 26+79.32
DELTA = 11° 55' 21.38" (RT)
D = 8° 19' 40"
T = 71.84'
L = 143.17'
R = 688.00'
PCC = 26+07.48
PT = 27+50.64
Lr = N/A
V = 30 MPH
E = 2.00%

Curve JBCON-3
PI = 31+33.18
DELTA = 12° 02' 38.93" (LT)
D = 4° 46' 29"
T = 126.59'
L = 252.25'
R = 1,200.00'
PC = 30+06.59
PT = 32+58.84
Lr = N/A
V = 30 MPH
E = NC

LEGEND

- C - - - Denotes Construction Limits In Cuts
- F - - Denotes Construction Limits In Fills
- Denotes Temporary Easement
- Denotes Permanent Easement
- Denotes Demolition of Pavement
- Denotes Proposed Pavement
- Denotes Mill & Overlay Pavement
- Denotes Existing Bridge
- Denotes Proposed Bridge

NOTE: See Sheet 1M for Incidental Legend

REFERENCES (PROFILES, DETAIL & DRAINAGE DESCRIPTION SHEETS, ETC.)	
Jones Branch Connector Profile	5A
JBWES Ramp Profile	5B
JBSEW Ramp Profile	5C
JBNEW Ramp Profile	5D
JBEWN Ramp Profile	5E

NOTE: FEATURES SHOWN AS TOPO ON THIS SHEET ARE BASED ON CONSTRUCTION PLANS FOR "I-495 HOT LANES - SECTION 7," DATED APRIL 13, 2010 AND ARE NOT AS-BUILT

THESE PLANS ARE UNFINISHED AND UNAPPROVED AND ARE NOT TO BE USED FOR ANY TYPE OF CONSTRUCTION OR THE ACQUISITION OF RIGHT OF WAY.

SCALE 0 25' 50'

PLAN NO.	PROJECT	SHEET NO.
	8102 - 029 - 065	5

PROJECT MANAGER Sung S. Shin, P.E. (703) 877-5753
SURVEYED BY <Surveyor Name (000) 000-0000, (District)>
DESIGN SUPERVISED BY John M. McDowell, P.E. (703) 246-0028 (RKK)
DESIGN BY Rummel, Klepper & Kahl, LLP (703) 246-0028

REVISED	STATE	STATE ROUTE	STATE PROJECT	SHEET NO.
	VA.	·	·	5A

DESIGN FEATURES RELATING TO CONSTRUCTION OR TO REGULATION AND CONTROL OF TRAFFIC MAY BE SUBJECT TO CHANGE AS DEEMED NECESSARY BY THE DEPARTMENT

Rummel, Klepper & Kahl, LLP
Fairfax, Virginia
ROADWAY ENGINEER

NOTE: FEATURES SHOWN AS TOPO ON THIS SHEET ARE BASED ON CONSTRUCTION PLANS FOR "I-495 HOT LANES - SECTION 7," DATED APRIL 13, 2010 AND ARE NOT AS-BUILT

THESE PLANS ARE UNFINISHED AND UNAPPROVED AND ARE NOT TO BE USED FOR ANY TYPE OF CONSTRUCTION OR THE ACQUISITION OF RIGHT OF WAY.

JONES BRANCH CONNECTOR

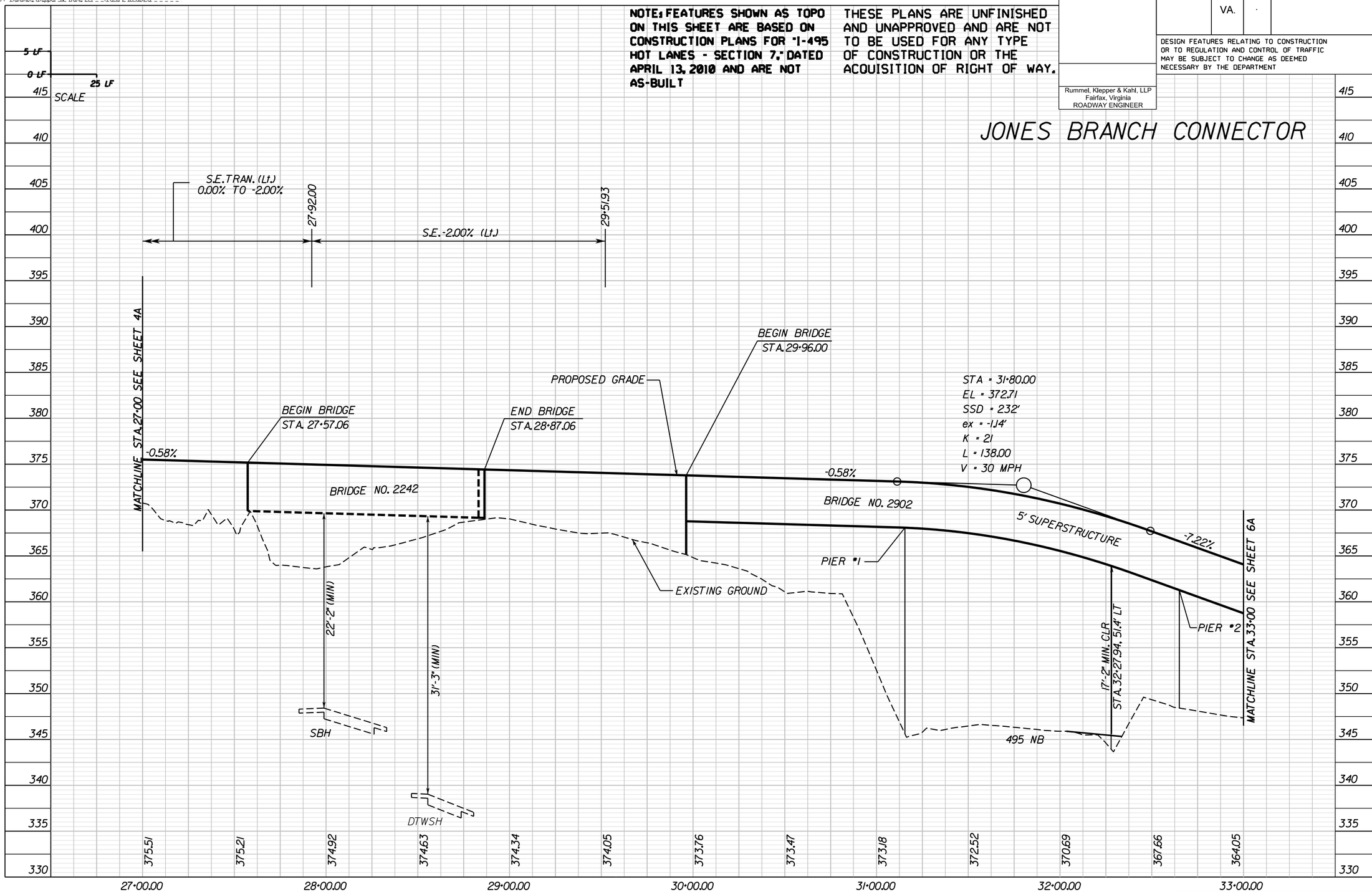

PROJECT	SHEET NO.
·	5A

1/17/2013

PROJECT MANAGER Sung S. Shin, PE (703) 877-5753
SURVEYED BY <Surveyor Name (000) 000-0000 (District)>
DESIGN SUPERVISED BY John M. McDowell, P.E. (703) 246-0028 (RKK)
DESIGNED BY Rummel, Klepper & Kahl, LLP (703) 246-0028

THESE PLANS ARE UNFINISHED AND UNAPPROVED AND ARE NOT TO BE USED FOR ANY TYPE OF CONSTRUCTION OR THE ACQUISITION OF RIGHT OF WAY.

REVISED	STATE	STATE ROUTE	STATE PROJECT	SHEET NO.
	VA.	-	-	5B

DESIGN FEATURES RELATING TO CONSTRUCTION OR TO REGULATION AND CONTROL OF TRAFFIC MAY BE SUBJECT TO CHANGE AS DEEMED NECESSARY BY THE DEPARTMENT

Rummel, Klepper & Kahl, LLP
Fairfax, Virginia
ROADWAY ENGINEER

JBWES RAMP

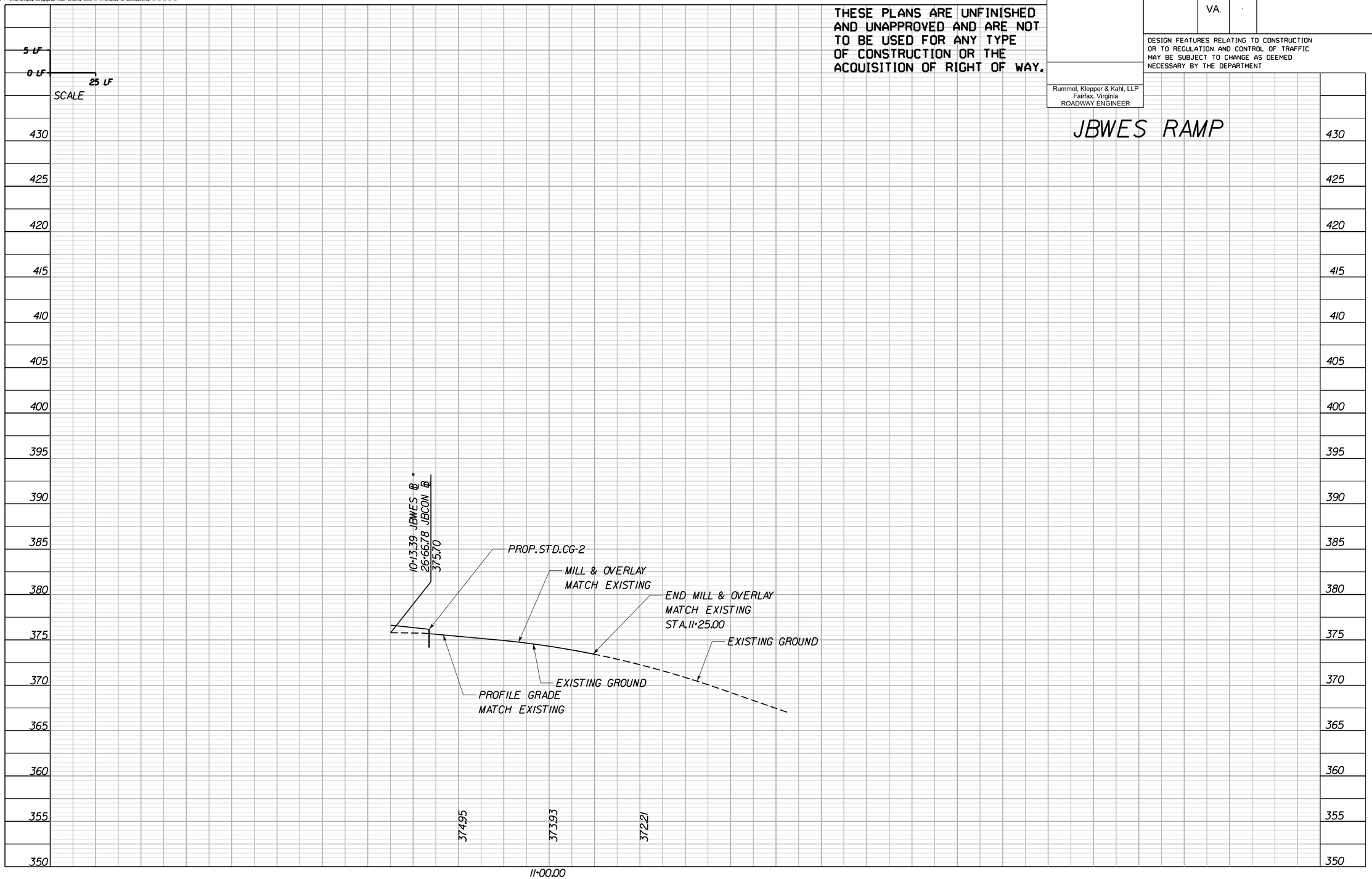

PROJECT	SHEET NO.
-	5B

1/17/2013

PROJECT MANAGER Sung S. Shin, PE (703) 871-5753
SURVEYED BY <Surveyor Name (000) 000-0000, (District)>
DESIGN SUPERVISED BY John M. McDowell, P.E. (703) 246-0028 (RKK)
DESIGNED BY Rummel, Klepper & Kahl, LLP (703) 246-0028

THESE PLANS ARE UNFINISHED AND UNAPPROVED AND ARE NOT TO BE USED FOR ANY TYPE OF CONSTRUCTION OR THE ACQUISITION OF RIGHT OF WAY.

REVISED	STATE	STATE ROUTE	STATE PROJECT	SHEET NO.
	VA.	·	·	5C

DESIGN FEATURES RELATING TO CONSTRUCTION OR TO REGULATION AND CONTROL OF TRAFFIC MAY BE SUBJECT TO CHANGE AS DEEMED NECESSARY BY THE DEPARTMENT

Rummel, Klepper & Kahl, LLP
Fairfax, Virginia
ROADWAY ENGINEER

JBSEW RAMP

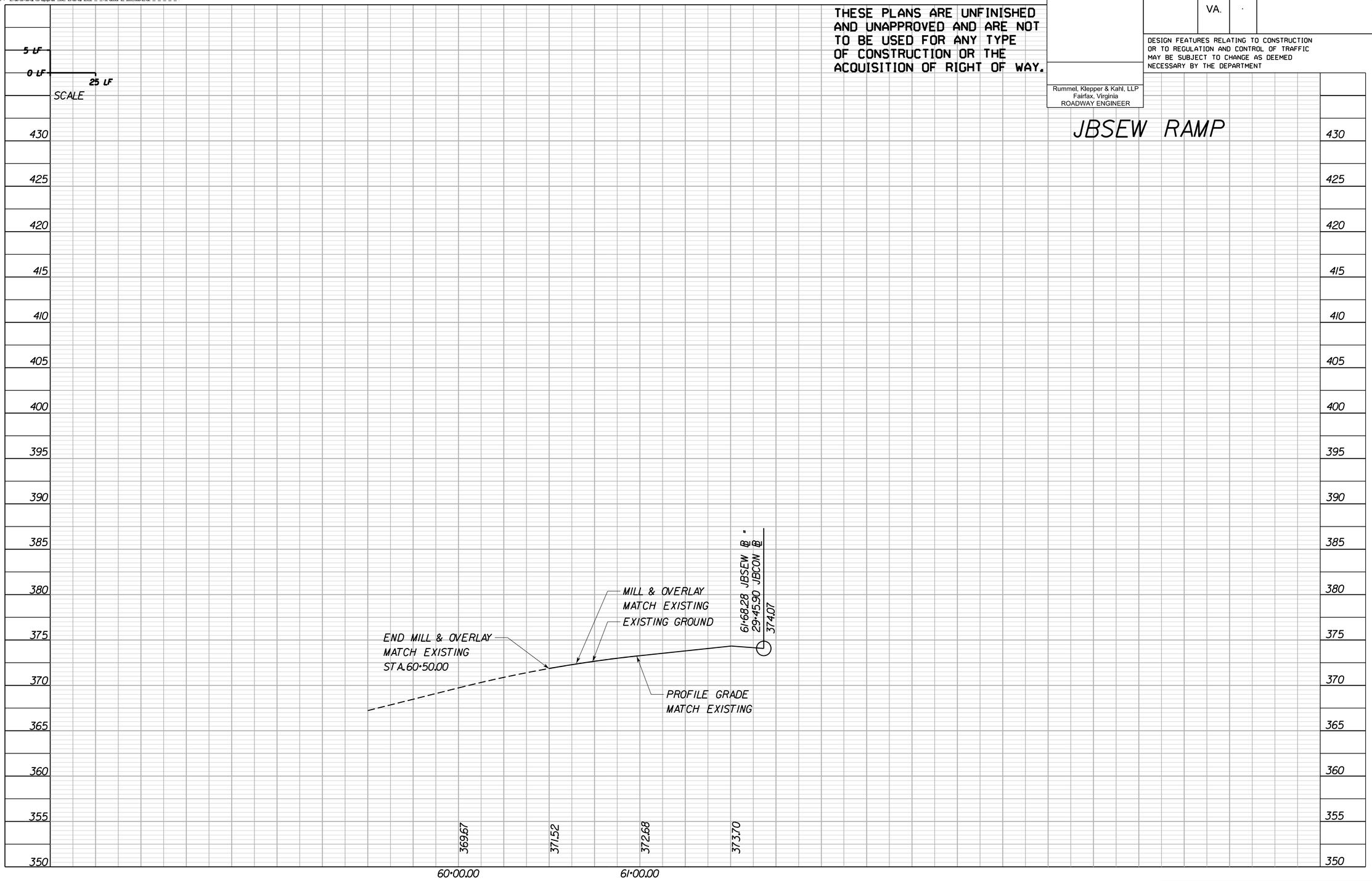

PROJECT	SHEET NO.
·	5C

1/17/2013

PROJECT MANAGER Sung S. Shin, P.E. (703) 871-5753
SURVEYED BY <Surveyor Name> (000) 000-0000 (District)
DESIGN SUPERVISED BY John M. McDowell, P.E. (703) 246-0028 (RKK)
DESIGN BY Rummel, Klepper & Kahl, LLP (703) 246-0028

THESE PLANS ARE UNFINISHED AND UNAPPROVED AND ARE NOT TO BE USED FOR ANY TYPE OF CONSTRUCTION OR THE ACQUISITION OF RIGHT OF WAY.

REVISED	STATE	STATE ROUTE	STATE PROJECT	SHEET NO.
	VA.	-	-	5D

DESIGN FEATURES RELATING TO CONSTRUCTION OR TO REGULATION AND CONTROL OF TRAFFIC MAY BE SUBJECT TO CHANGE AS DEEMED NECESSARY BY THE DEPARTMENT

Rummel, Klepper & Kahl, LLP
Fairfax, Virginia
ROADWAY ENGINEER

JBNEW RAMP

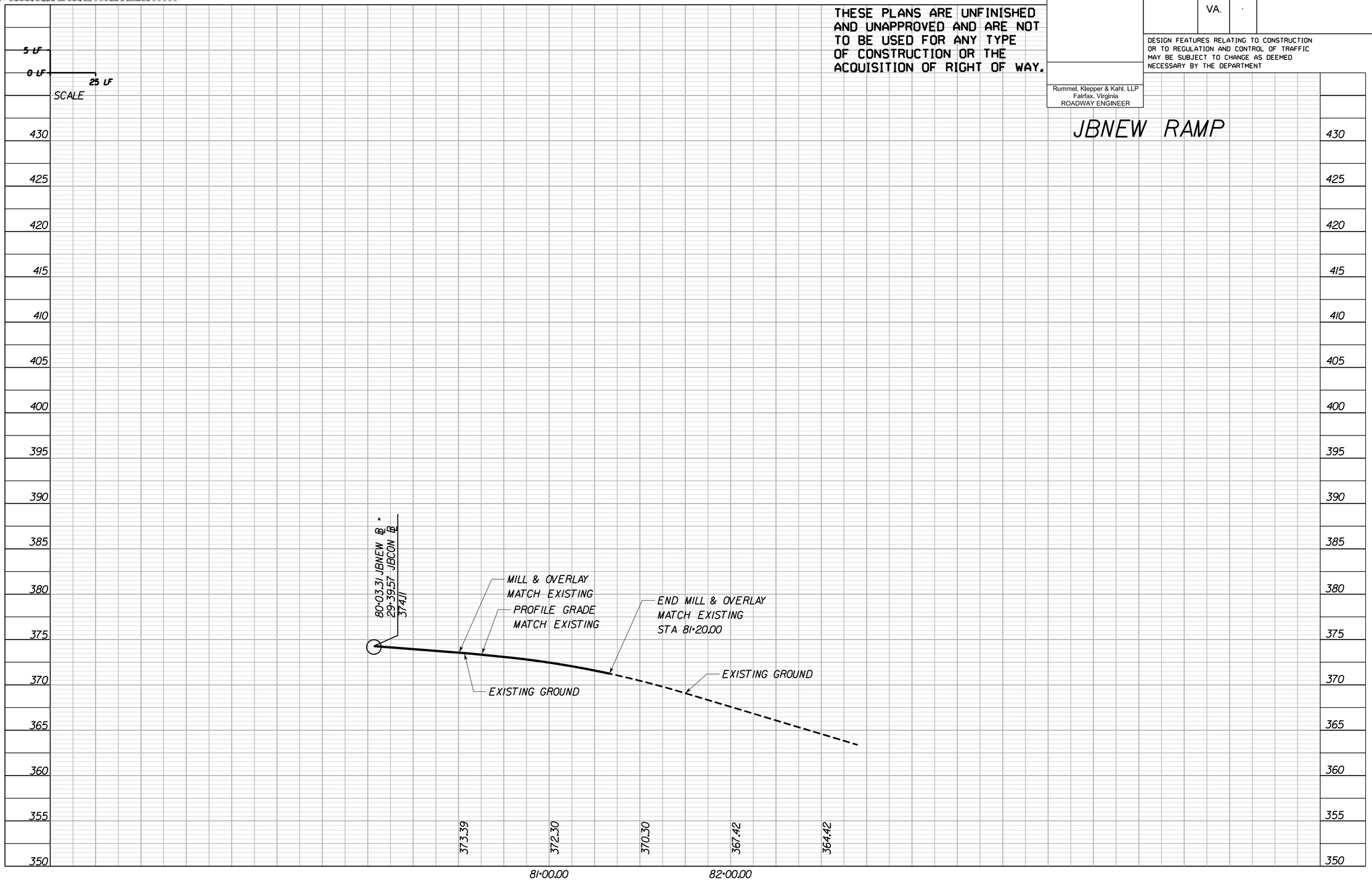

PROJECT	SHEET NO.
-	5D

1/17/2013

PROJECT MANAGER Sung S. Shin, P.E. (703) 877-5753
SURVEYED BY <Surveyor Name> (000) 000-0000 (District)
DESIGN SUPERVISED BY John M. McDowell, P.E. (703) 246-0028 (RKK)
DESIGNED BY Rummel, Klepper & Kahl, LLP (703) 246-0028

THESE PLANS ARE UNFINISHED AND UNAPPROVED AND ARE NOT TO BE USED FOR ANY TYPE OF CONSTRUCTION OR THE ACQUISITION OF RIGHT OF WAY.

REVISED	STATE	STATE ROUTE	STATE PROJECT	SHEET NO.
	VA.	·	·	5E

DESIGN FEATURES RELATING TO CONSTRUCTION OR TO REGULATION AND CONTROL OF TRAFFIC MAY BE SUBJECT TO CHANGE AS DEEMED NECESSARY BY THE DEPARTMENT

Rummel, Klepper & Kahl, LLP
Fairfax, Virginia
ROADWAY ENGINEER

JBEWN RAMP

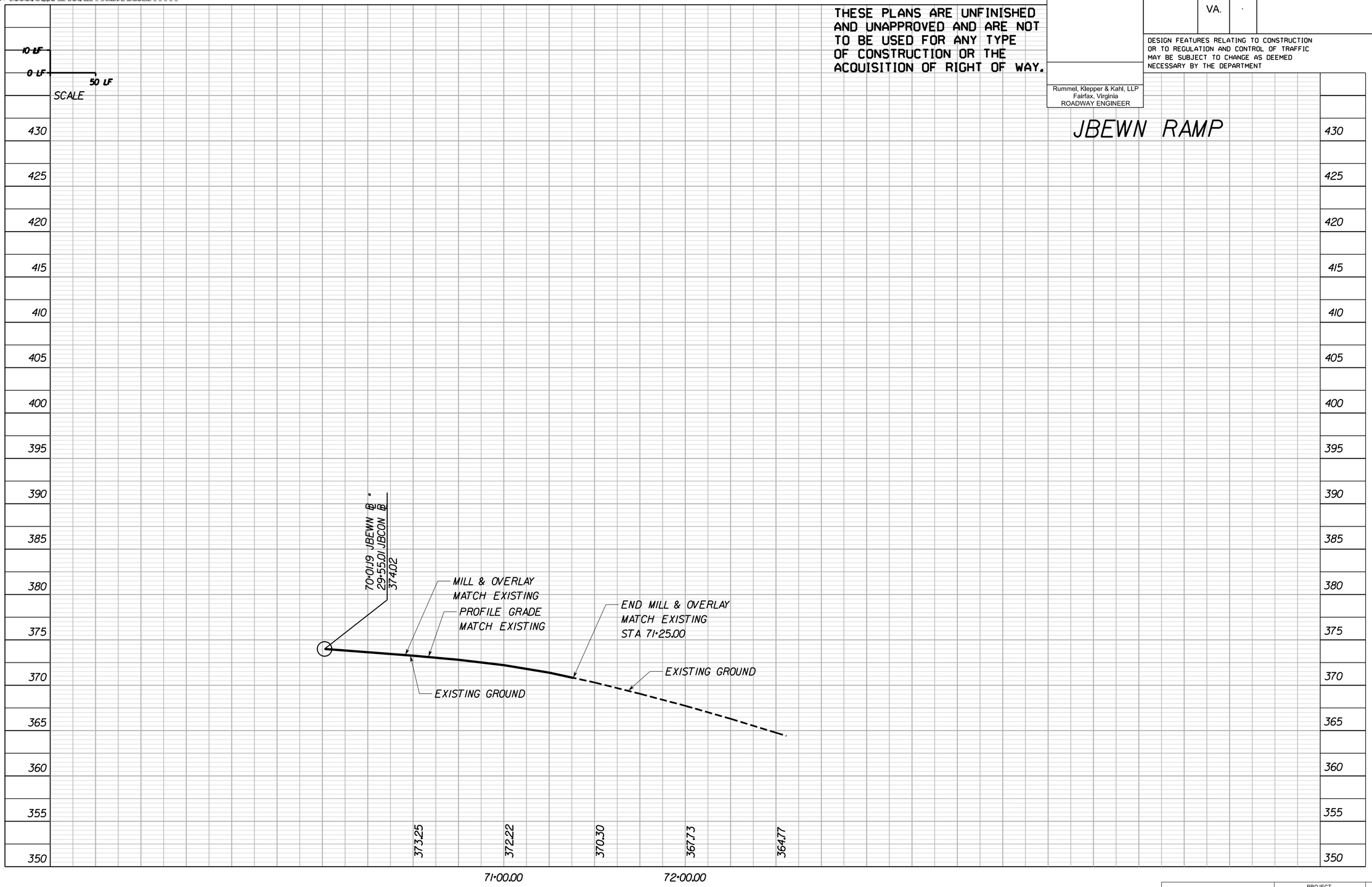

PROJECT	SHEET NO.
·	5E

1/17/2013

PROJECT MANAGER Sung S. Shin, PE (703) 877-5753
DESIGN SUPERVISED BY John M. McDowell, PE (703) 246-0028 (RKK)
DESIGN BY Rummel, Klepper & Kahl, LLP (703) 246-0028

REVISED	STATE	STATE ROUTE	STATE PROJECT	SHEET NO.
	VA.		8102 - 029 - 065	6

Rummel, Klepper & Kahl, LLP, Fairfax, Virginia — ROADWAY ENGINEER
Rummel, Klepper & Kahl, LLP, Fairfax, Virginia — HYDRAULIC ENGINEER

DESIGN FEATURES RELATING TO CONSTRUCTION OR TO REGULATION AND CONTROL OF TRAFFIC MAY BE SUBJECT TO CHANGE AS DEEMED NECESSARY BY THE DEPARTMENT.

NOTE: THE LANE CONFIGURATION AND STORAGE LENGTH DEDICATED TO BE FINALIZED BASED ON THE DETAILED TRAFFIC ANALYSIS RESULTS.

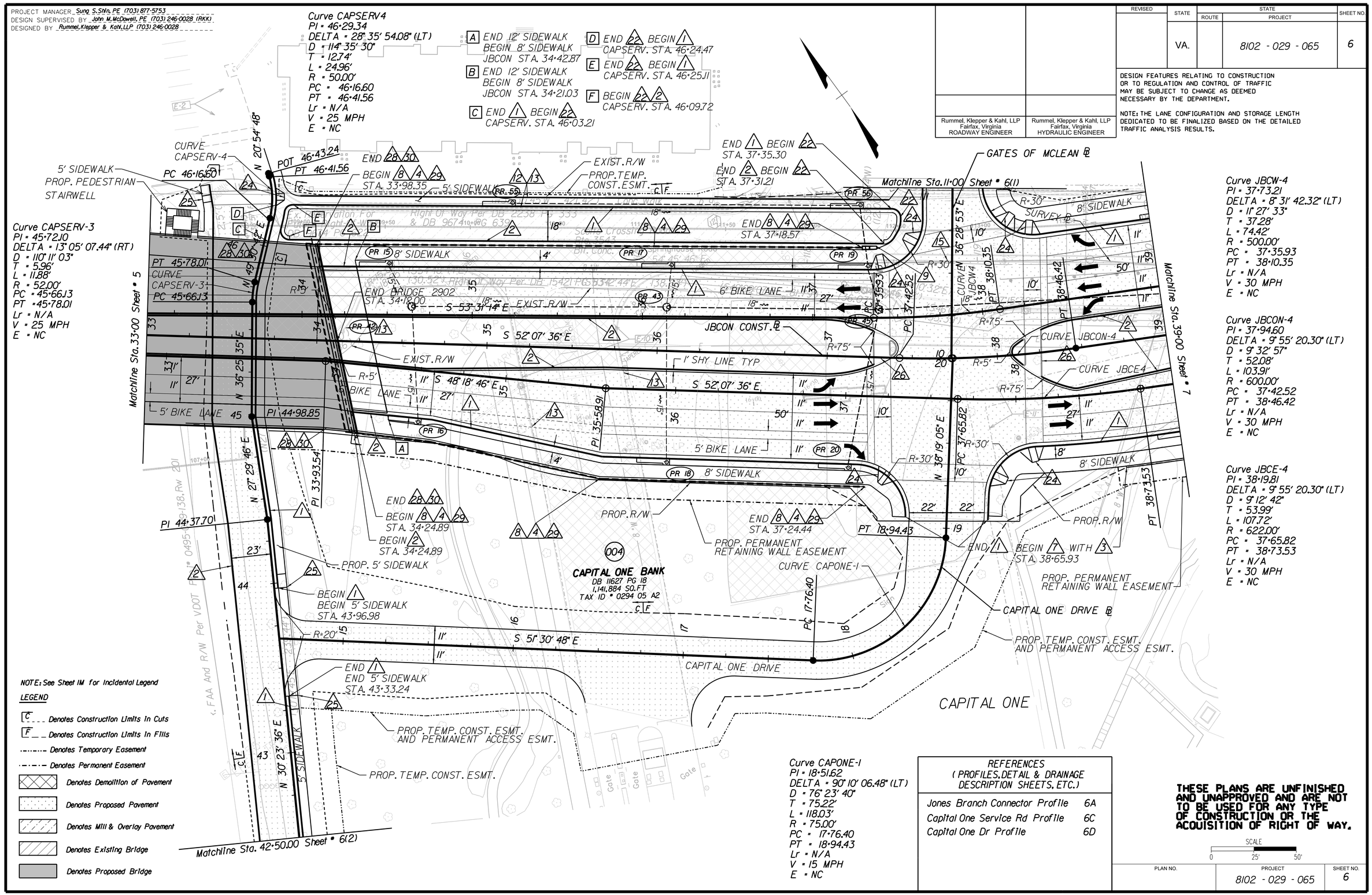

Curve CAPONE-1
PI = 18+51.62
DELTA = 90° 10' 06.48" (LT)
D = 76° 23' 40"
T = 75.22'
L = 118.03'
R = 75.00'
PC = 17+76.40
PT = 18+94.43
Lr = N/A
V = 15 MPH
E = NC

REFERENCES (PROFILES, DETAIL & DRAINAGE DESCRIPTION SHEETS, ETC.)	
Jones Branch Connector Profile	6A
Capital One Service Rd Profile	6C
Capital One Dr Profile	6D

THESE PLANS ARE UNFINISHED AND UNAPPROVED AND ARE NOT TO BE USED FOR ANY TYPE OF CONSTRUCTION OR THE ACQUISITION OF RIGHT OF WAY.

SCALE 0 25' 50'

PLAN NO.	PROJECT	SHEET NO.
	8102 - 029 - 065	6

PROJECT MANAGER Sung S. Shin, PE (703) 877-5753
DESIGN SUPERVISED BY John M. McDowell, PE (703) 246-0028 (RKK)
DESIGNED BY Rummel, Klepper & Kahl, LLP (703) 246-0028

GATES OF MCLEAN SITE IMPROVEMENTS

REVISED	STATE	STATE ROUTE	STATE PROJECT	SHEET NO
	VA.		8102 - 029 - 065	6(1)

Rummel, Klepper & Kahl, LLP
Fairfax, Virginia
ROADWAY ENGINEER

Rummel, Klepper & Kahl, LLP
Fairfax, Virginia
HYDRAULIC ENGINEER

DESIGN FEATURES RELATING TO CONSTRUCTION OR TO REGULATION AND CONTROL OF TRAFFIC MAY BE SUBJECT TO CHANGE AS DEEMED NECESSARY BY THE DEPARTMENT.

NOTE: THE LANE CONFIGURATION AND STORAGE LENGTH DEDICATED TO BE FINALIZED BASED ON THE DETAILED TRAFFIC ANALYSIS RESULTS.

PARKING LOT GRADING PLAN

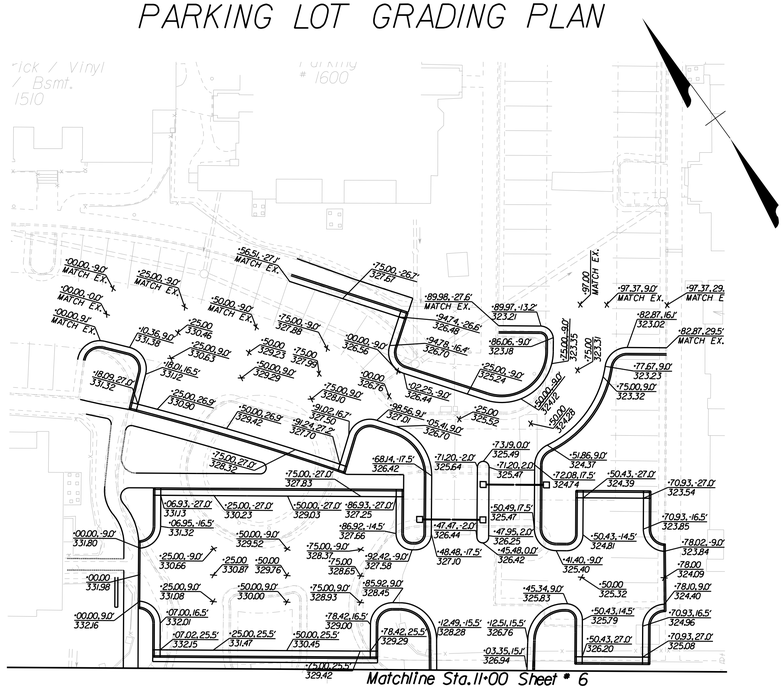

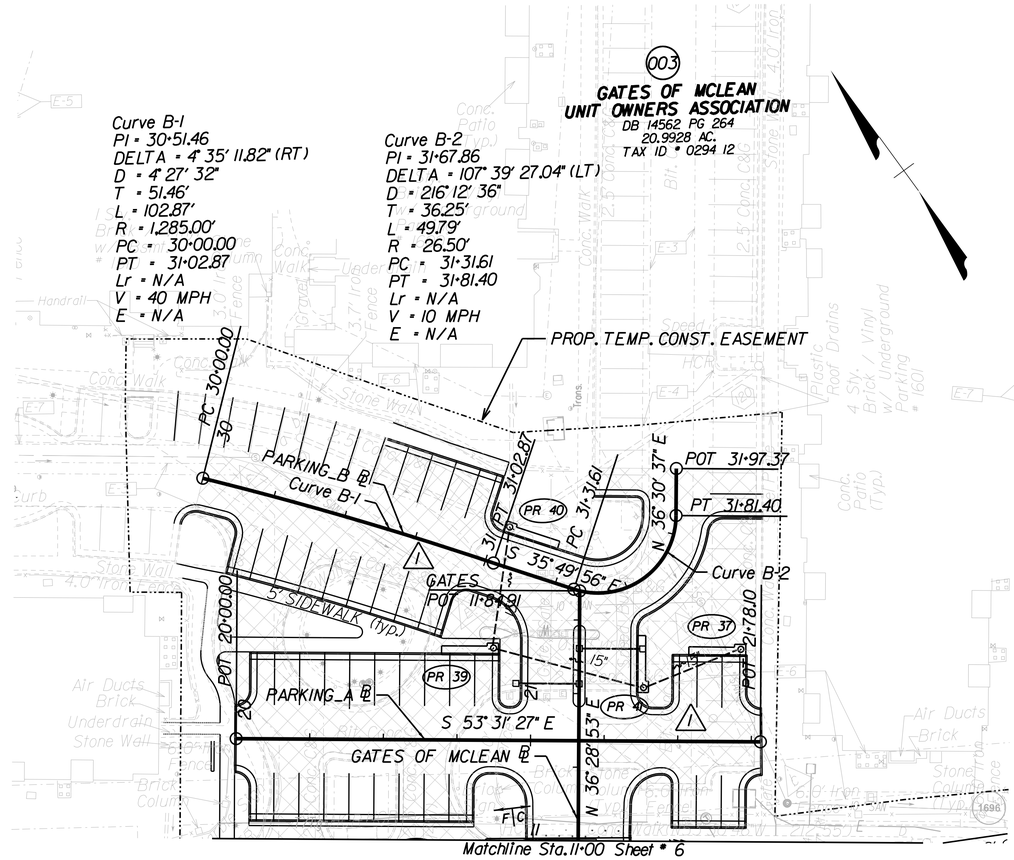

NOTE: See Sheet IM for Incidental Legend

LEGEND

- Denotes Construction Limits In Cuts
- Denotes Construction Limits In Fills
- Denotes Temporary Easement
- Denotes Permanent Easement
- Denotes Demolition of Pavement
- Denotes Proposed Pavement
- Denotes Mill & Overlay Pavement
- Denotes Existing Bridge
- Denotes Proposed Bridge

REFERENCES (PROFILES, DETAIL & DRAINAGE DESCRIPTION SHEETS, ETC.)	
Gates of McLean Profiles	9

THESE PLANS ARE UNFINISHED AND UNAPPROVED AND ARE NOT TO BE USED FOR ANY TYPE OF CONSTRUCTION OR THE ACQUISITION OF RIGHT OF WAY.

SCALE 0 25' 50'

PLAN NO.	PROJECT	SHEET NO.
	8102 - 029 - 065	6(1)

PROJECT MANAGER Sung S. Shin, PE (703) 877-5753
DESIGN SUPERVISED BY John M. McDowell, PE (703) 246-0028 (RKK)
DESIGN BY Rummel, Klepper & Kahl, LLP (703) 246-0028

Rummel, Klepper & Kahl, LLP Fairfax, Virginia ROADWAY ENGINEER	Rummel, Klepper & Kahl, LLP Fairfax, Virginia HYDRAULIC ENGINEER

REVISED	STATE	STATE ROUTE	STATE PROJECT	SHEET NO
	VA.		8102 - 029 - 065	6(2)

DESIGN FEATURES RELATING TO CONSTRUCTION OR TO REGULATION AND CONTROL OF TRAFFIC MAY BE SUBJECT TO CHANGE AS DEEMED NECESSARY BY THE DEPARTMENT.

NOTE: THE LANE CONFIGURATION AND STORAGE LENGTH DEDICATED TO BE [illegible] BASED ON THE UPDATED TRAFFIC ANALYSIS.

NOTE: TOPO SHOWN IS FUTURE CAPITAL ONE IMPROVEMENTS.

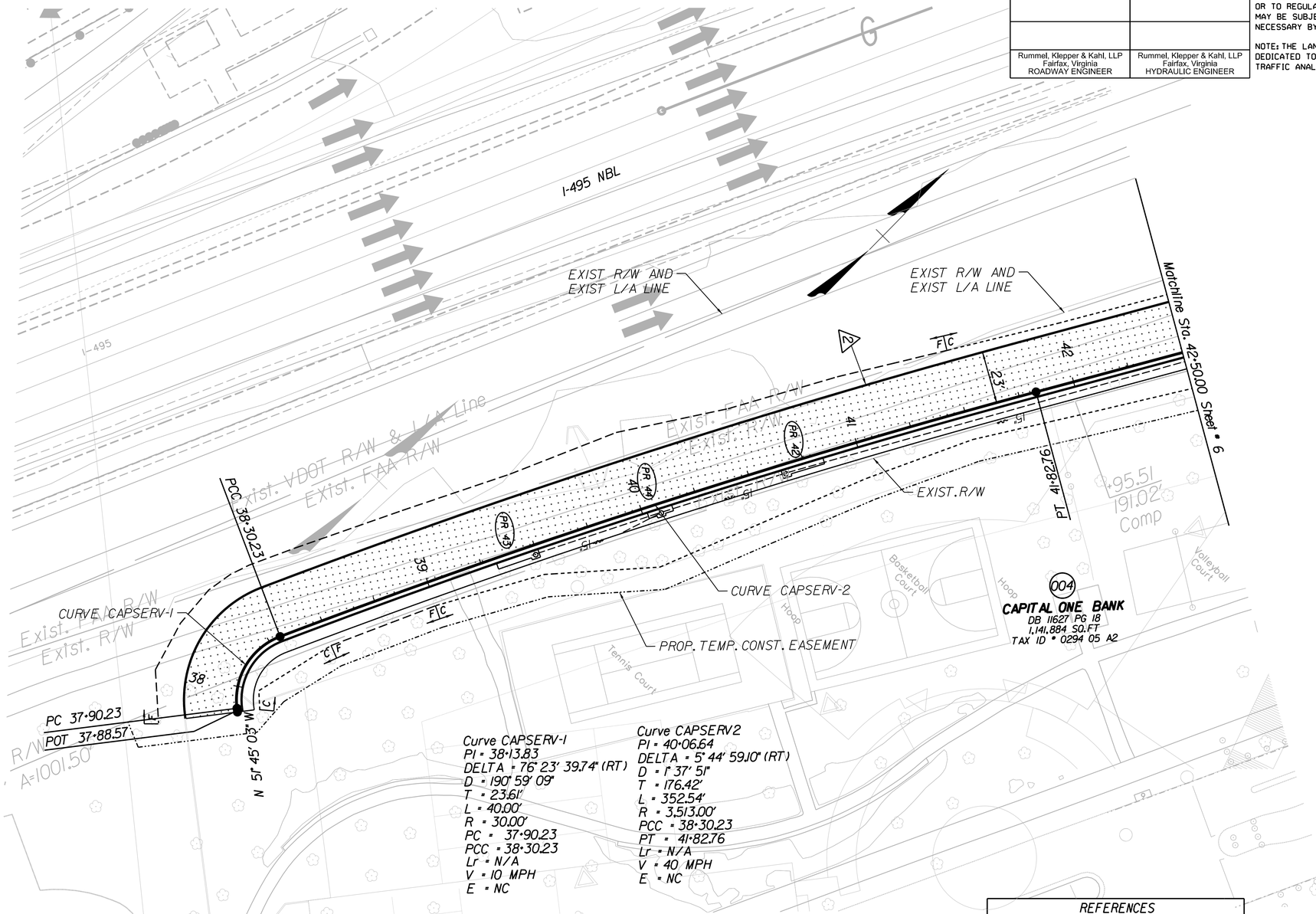

Curve CAPSERV-1
PI = 38+13.83
DELTA = 76° 23' 39.74" (RT)
D = 190° 59' 09"
T = 23.61'
L = 40.00'
R = 30.00'
PC = 37+90.23
PCC = 38+30.23
Lr = N/A
V = 10 MPH
E = NC

Curve CAPSERV2
PI = 40+06.64
DELTA = 5° 44' 59.10" (RT)
D = 1° 37' 51"
T = 176.42'
L = 352.54'
R = 3,513.00'
PCC = 38+30.23
PT = 41+82.76
Lr = N/A
V = 40 MPH
E = NC

NOTE: See Sheet 1M for Incidental Legend

LEGEND

- C Denotes Construction Limits In Cuts
- F Denotes Construction Limits In Fills
- Denotes Temporary Easement
- Denotes Permanent Easement
- Denotes Demolition of Pavement
- Denotes Proposed Pavement
- Denotes Mill & Overlay Pavement
- Denotes Existing Bridge
- Denotes Proposed Bridge

REFERENCES
(PROFILES, DETAIL & DRAINAGE DESCRIPTION SHEETS, ETC.)

Capital One Service Rd Profile 6B

THESE PLANS ARE UNFINISHED AND UNAPPROVED AND ARE NOT TO BE USED FOR ANY TYPE OF CONSTRUCTION OR THE ACQUISITION OF RIGHT OF WAY.

SCALE 0 25' 50'

PLAN NO.	PROJECT	SHEET NO.
	8102 - 029 - 065	6(2)

PROJECT MANAGER Sung S. Shin, P.E. (703) 877-5753
SURVEYED BY <Surveyor Name (000) 000-0000 (District)>
DESIGN SUPERVISED BY John M. McDowell, P.E. (703) 246-0028 (RKK)
DESIGN BY Rummel, Klepper & Kahl, LLP (703) 246-0028

THESE PLANS ARE UNFINISHED AND UNAPPROVED AND ARE NOT TO BE USED FOR ANY TYPE OF CONSTRUCTION OR THE ACQUISITION OF RIGHT OF WAY.

REVISED	STATE	STATE ROUTE	STATE PROJECT	SHEET NO.
	VA.	.	.	6A

DESIGN FEATURES RELATING TO CONSTRUCTION OR TO REGULATION AND CONTROL OF TRAFFIC MAY BE SUBJECT TO CHANGE AS DEEMED NECESSARY BY THE DEPARTMENT

Rummel, Klepper & Kahl, LLP
Fairfax, Virginia
ROADWAY ENGINEER

JONES BRANCH CONNECTOR

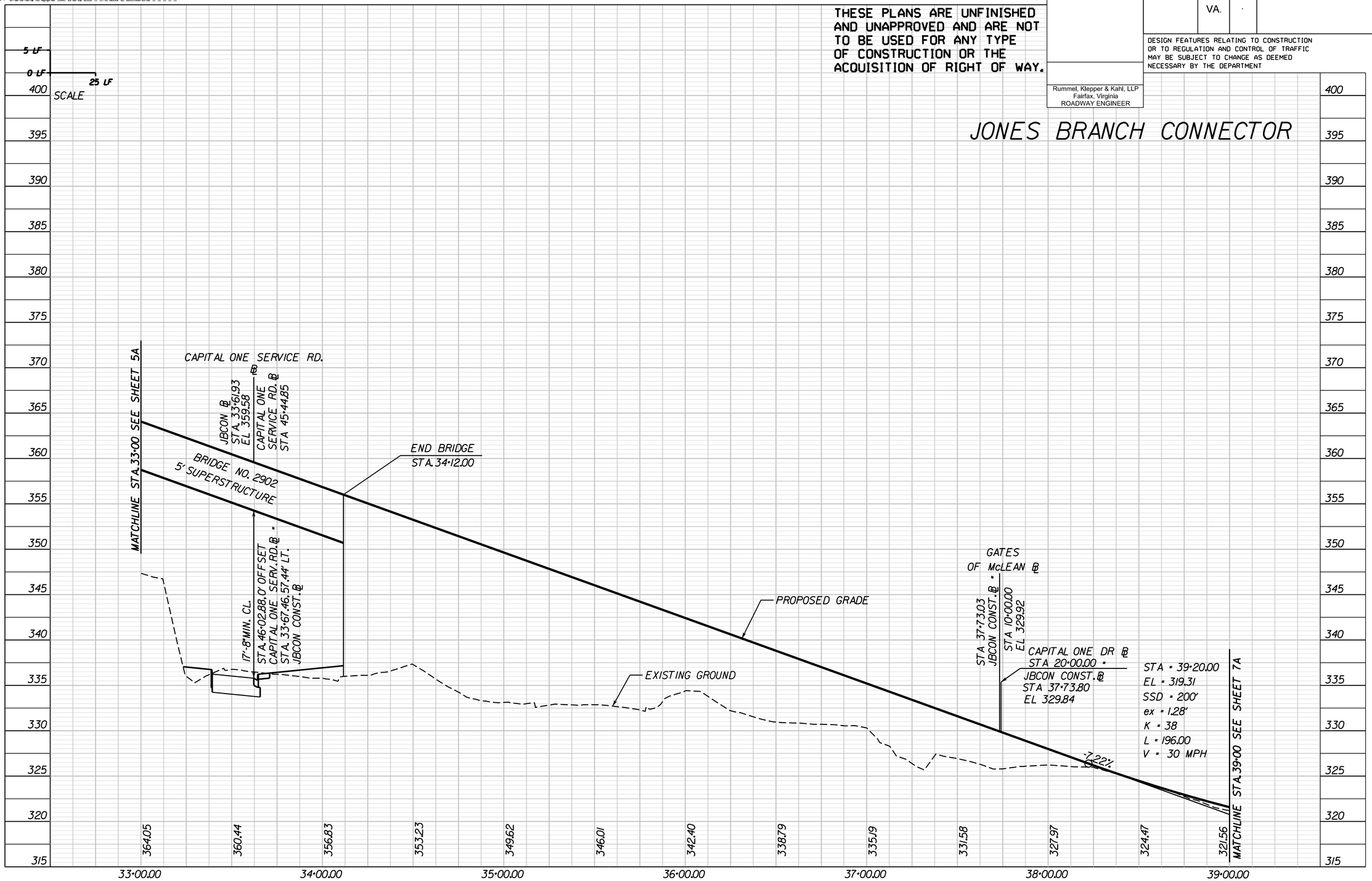

PROJECT	SHEET NO.
.	6A

1/17/2013

PROJECT MANAGER Sung S. Shin, PE (703) 871-5753
SURVEYED BY <Surveyor Name (000) 000-0000 (District)>
DESIGN SUPERVISED BY John M. McDowell, P.E. (703) 246-0028 (RKK)
DESIGN BY Rummel, Klepper & Kahl, LLP (703) 246-0028

THESE PLANS ARE UNFINISHED AND UNAPPROVED AND ARE NOT TO BE USED FOR ANY TYPE OF CONSTRUCTION OR THE ACQUISITION OF RIGHT OF WAY.

REVISED	STATE	STATE ROUTE	STATE PROJECT	SHEET NO.
	VA.	-	-	6B

DESIGN FEATURES RELATING TO CONSTRUCTION OR TO REGULATION AND CONTROL OF TRAFFIC MAY BE SUBJECT TO CHANGE AS DEEMED NECESSARY BY THE DEPARTMENT

Rummel, Klepper & Kahl, LLP
Fairfax, Virginia
ROADWAY ENGINEER

CAPITAL ONE SERVICE ROAD

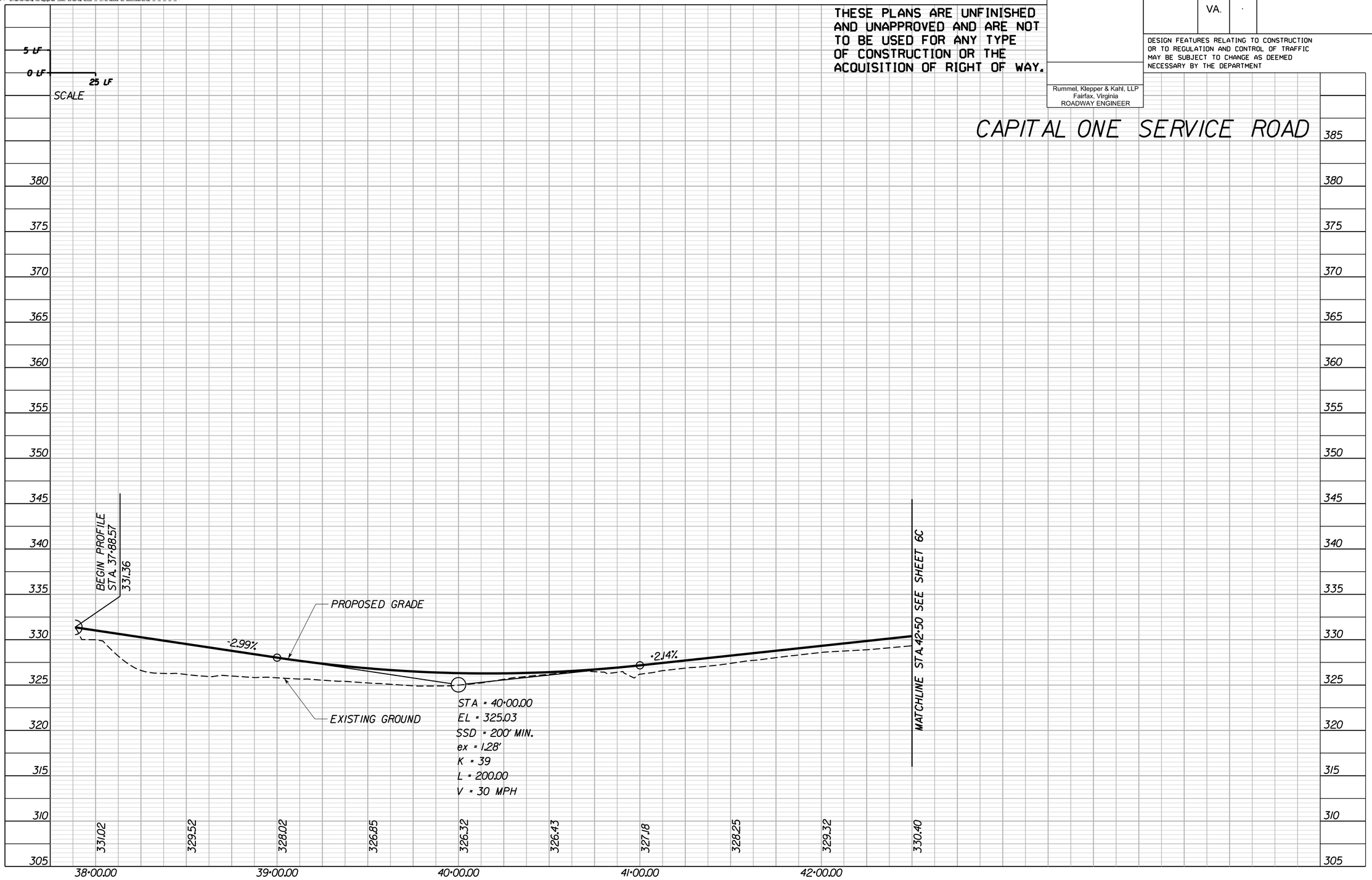

PROJECT	SHEET NO.
-	6B

1/17/2013

PROJECT MANAGER Sung S. Shin, P.E. (703) 877-5753
SURVEYED BY <Surveyor Name (000) 000-0000 (District)>
DESIGN SUPERVISED BY John M. McDowell, P.E. (703) 246-0028 (RKK)
DESIGN BY Rummel, Klepper & Kahl, LLP (703) 246-0028

THESE PLANS ARE UNFINISHED AND UNAPPROVED AND ARE NOT TO BE USED FOR ANY TYPE OF CONSTRUCTION OR THE ACQUISITION OF RIGHT OF WAY.

REVISED	STATE	STATE ROUTE	STATE PROJECT	SHEET NO.
	VA.	·	·	6C

DESIGN FEATURES RELATING TO CONSTRUCTION OR TO REGULATION AND CONTROL OF TRAFFIC MAY BE SUBJECT TO CHANGE AS DEEMED NECESSARY BY THE DEPARTMENT

Rummel, Klepper & Kahl, LLP
Fairfax, Virginia
ROADWAY ENGINEER

CAPITAL ONE SERVICE ROAD

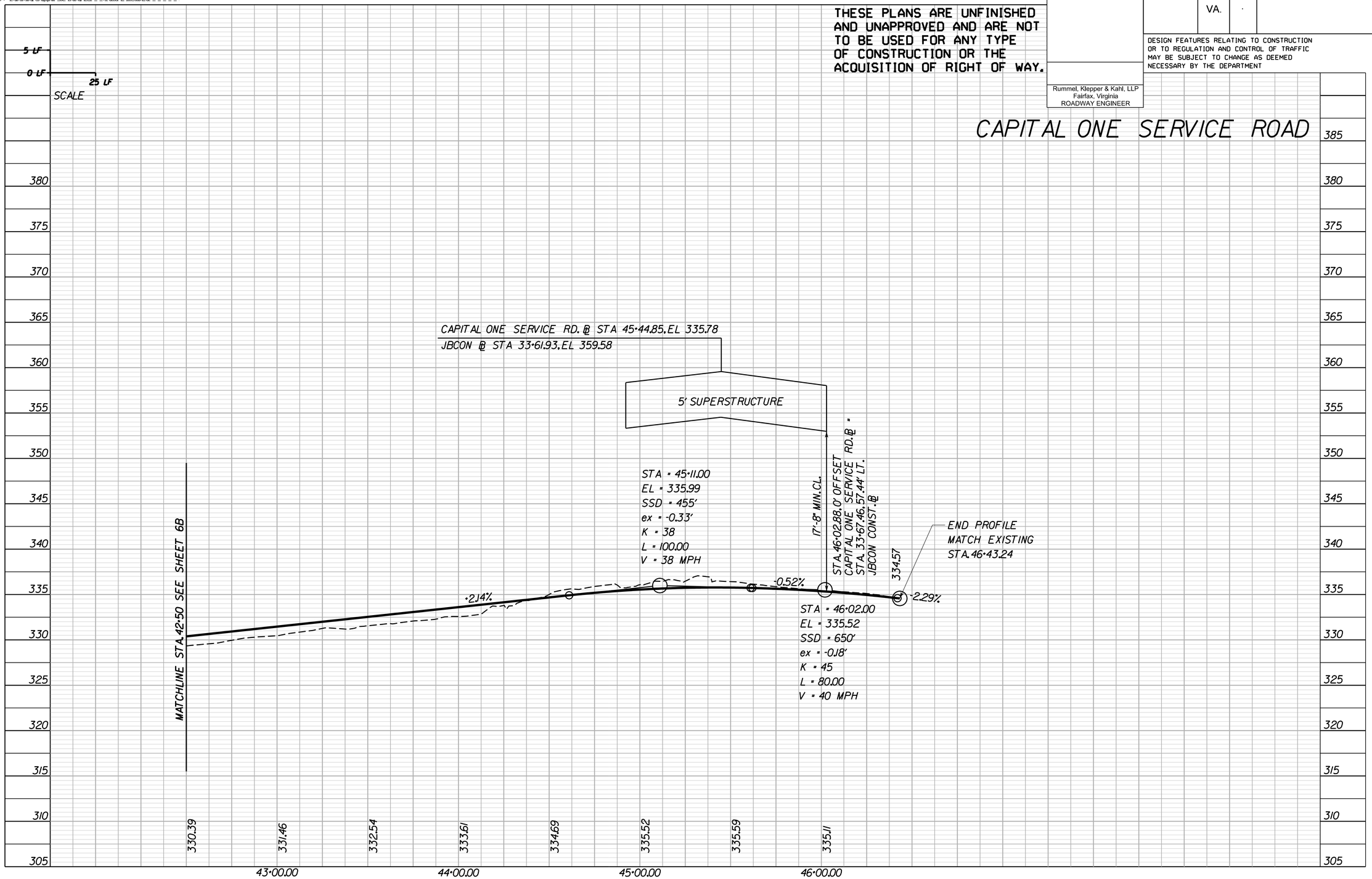

PROJECT	SHEET NO.
·	6C

1/17/2013

PROJECT MANAGER Sung S. Shin, P.E. (703) 871-5753
SURVEYED BY <Surveyor Name> (000) 000-0000 (District)
DESIGN SUPERVISED BY John M. McDowell, P.E. (703) 246-0028 (RKK)
DESIGN BY Rummel, Klepper & Kahl, LLP (703) 246-0028

THESE PLANS ARE UNFINISHED AND UNAPPROVED AND ARE NOT TO BE USED FOR ANY TYPE OF CONSTRUCTION OR THE ACQUISITION OF RIGHT OF WAY.

REVISED	STATE	STATE ROUTE	STATE PROJECT	SHEET NO.
	VA.	·	·	6D

DESIGN FEATURES RELATING TO CONSTRUCTION OR TO REGULATION AND CONTROL OF TRAFFIC MAY BE SUBJECT TO CHANGE AS DEEMED NECESSARY BY THE DEPARTMENT

Rummel, Klepper & Kahl, LLP
Fairfax, Virginia
ROADWAY ENGINEER

CAPITAL ONE DRIVE

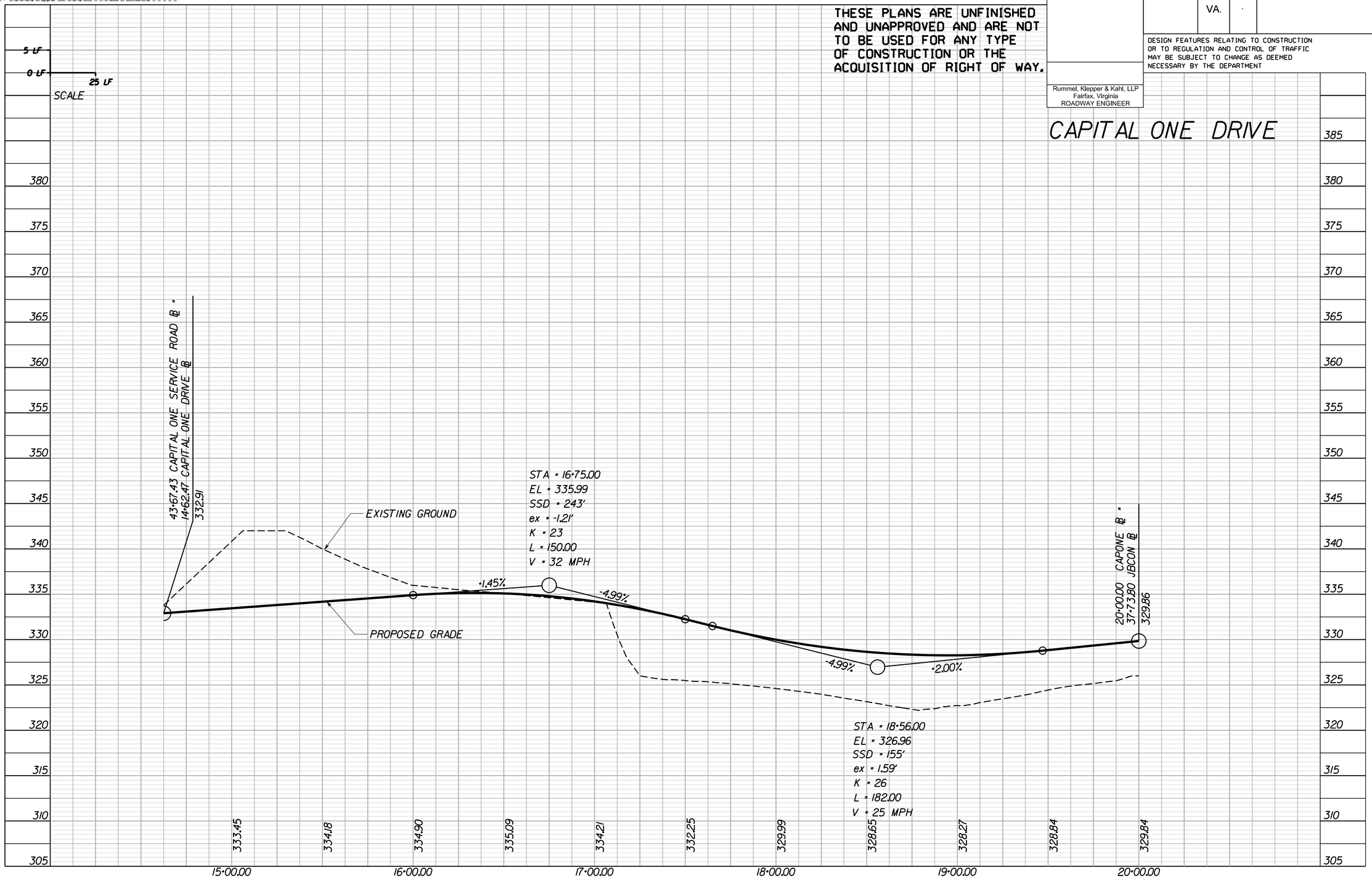

PROJECT	SHEET NO.
·	6D

1/17/2013

PROJECT MANAGER Sung S. Shin, PE (703) 877-5753
DESIGN SUPERVISED BY John M. McDowell, PE (703) 246-0028 (RKK)
DESIGNED BY Rummel, Klepper & Kahl, LLP (703) 246-0028

A JBCON CONST. ℄ STA. 43+75.00 = JBCE ℄ STA. 43+59.82, 13' RT. JBCW ℄ STA. 43+89.14, 18' LT.

B PROP. 2' VERTICAL EXTENSION OF EXIST. CULVERT WING WALLS AND PARAPET

C BEGIN PATH RELOCATION STA. 39+46.90

D END PATH RELOCATION STA. 42+25.00

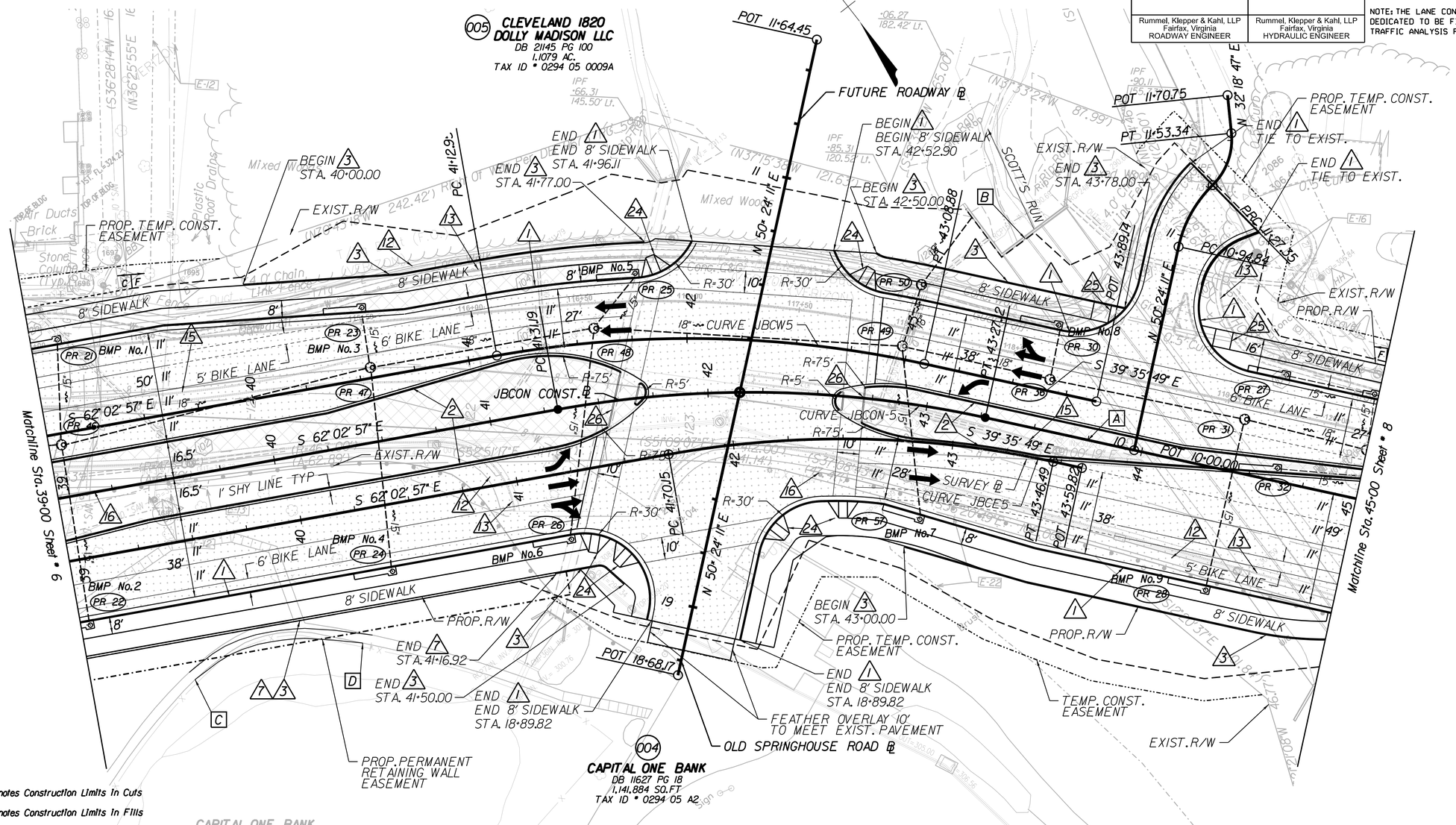

REVISED	STATE	STATE ROUTE	STATE PROJECT	SHEET NO
	VA.		8102 - 029 - 065	7

Rummel, Klepper & Kahl, LLP, Fairfax, Virginia — ROADWAY ENGINEER

Rummel, Klepper & Kahl, LLP, Fairfax, Virginia — HYDRAULIC ENGINEER

DESIGN FEATURES RELATING TO CONSTRUCTION OR TO REGULATION AND CONTROL OF TRAFFIC MAY BE SUBJECT TO CHANGE AS DEEMED NECESSARY BY THE DEPARTMENT.

NOTE: THE LANE CONFIGURATION AND STORAGE LENGTH DEDICATED TO BE FINALIZED BASED ON THE DETAILED TRAFFIC ANALYSIS RESULTS.

Curve CL1
PI = 11+11.57
DELTA = 33° 15' 30.28" (RT)
D = 102° 18' 50"
T = 16.73'
L = 32.51'
R = 56.00'
PC = 10+94.84
PRC = 11+27.35
Lr = N/A
V = 20 MPH
E = NC

Curve CL2
PI = 11+41.29
DELTA = 51° 20' 54.19" (LT)
D = 197° 34' 18"
T = 13.94'
L = 25.99'
R = 29.00'
PRC = 11+27.35
PT = 11+53.34
Lr = N/A
V = 20 MPH
E = NC

Curve JBCW-5
PI = 42+12.19
DELTA = 22° 27' 07.69" (RT)
D = 11° 27' 33"
T = 99.24'
L = 195.93'
R = 500.00'
PC = 41+12.95
PT = 43+08.88
Lr = N/A
V = 30 MPH
E = NC

LEGEND

- C Denotes Construction Limits In Cuts
- F Denotes Construction Limits In Fills
- Denotes Temporary Easement
- Denotes Permanent Easement
- Denotes Demolition of Pavement
- Denotes Proposed Pavement
- Denotes Mill & Overlay Pavement
- Denotes Existing Bridge
- Denotes Proposed Bridge

NOTE: See Sheet 1M for Incidental Legend

Curve JBCON-5
PI = 42+30.43
DELTA = 22° 27' 07.69" (RT)
D = 11° 27' 33"
T = 99.24'
L = 195.93'
R = 500.00'
PC = 41+31.19
PT = 43+27.12
Lr = N/A
V = 30 MPH
E = NC

Curve JBCE-5
PI = 42+59.46
DELTA = 22° 27' 07.69" (RT)
D = 12° 43' 57"
T = 89.32'
L = 176.34'
R = 450.00'
PC = 41+70.15
PT = 43+46.49
Lr = N/A
V = 30 MPH
E = NC

REFERENCES
(PROFILES, DETAIL & DRAINAGE DESCRIPTION SHEETS, ETC.)

Jones Branch Connector Profile	7A
Future Roadway Profile	9
Old Springhouse Rd Profile	9
Cityline Profile	9

THESE PLANS ARE UNFINISHED AND UNAPPROVED AND ARE NOT TO BE USED FOR ANY TYPE OF CONSTRUCTION OR THE ACQUISITION OF RIGHT OF WAY.

SCALE 0 25' 50'

PLAN NO.	PROJECT	SHEET NO.
	8102 - 029 - 065	7

PROJECT MANAGER Sung S. Shin, P.E. (703) 877-5753
SURVEYED BY <Survey Name (000) 000-0000 (District)>
DESIGN SUPERVISED BY John M. McDowell, P.E. (703) 246-0028 (RKK)
DESIGN BY Rummel, Klepper & Kahl, LLP (703) 246-0028

REVISED	STATE	STATE ROUTE	STATE PROJECT	SHEET NO.
	VA.	-	-	7A

THESE PLANS ARE UNFINISHED AND UNAPPROVED AND ARE NOT TO BE USED FOR ANY TYPE OF CONSTRUCTION OR THE ACQUISITION OF RIGHT OF WAY.

DESIGN FEATURES RELATING TO CONSTRUCTION OR TO REGULATION AND CONTROL OF TRAFFIC MAY BE SUBJECT TO CHANGE AS DEEMED NECESSARY BY THE DEPARTMENT

Rummel, Klepper & Kahl, LLP
Fairfax, Virginia
ROADWAY ENGINEER

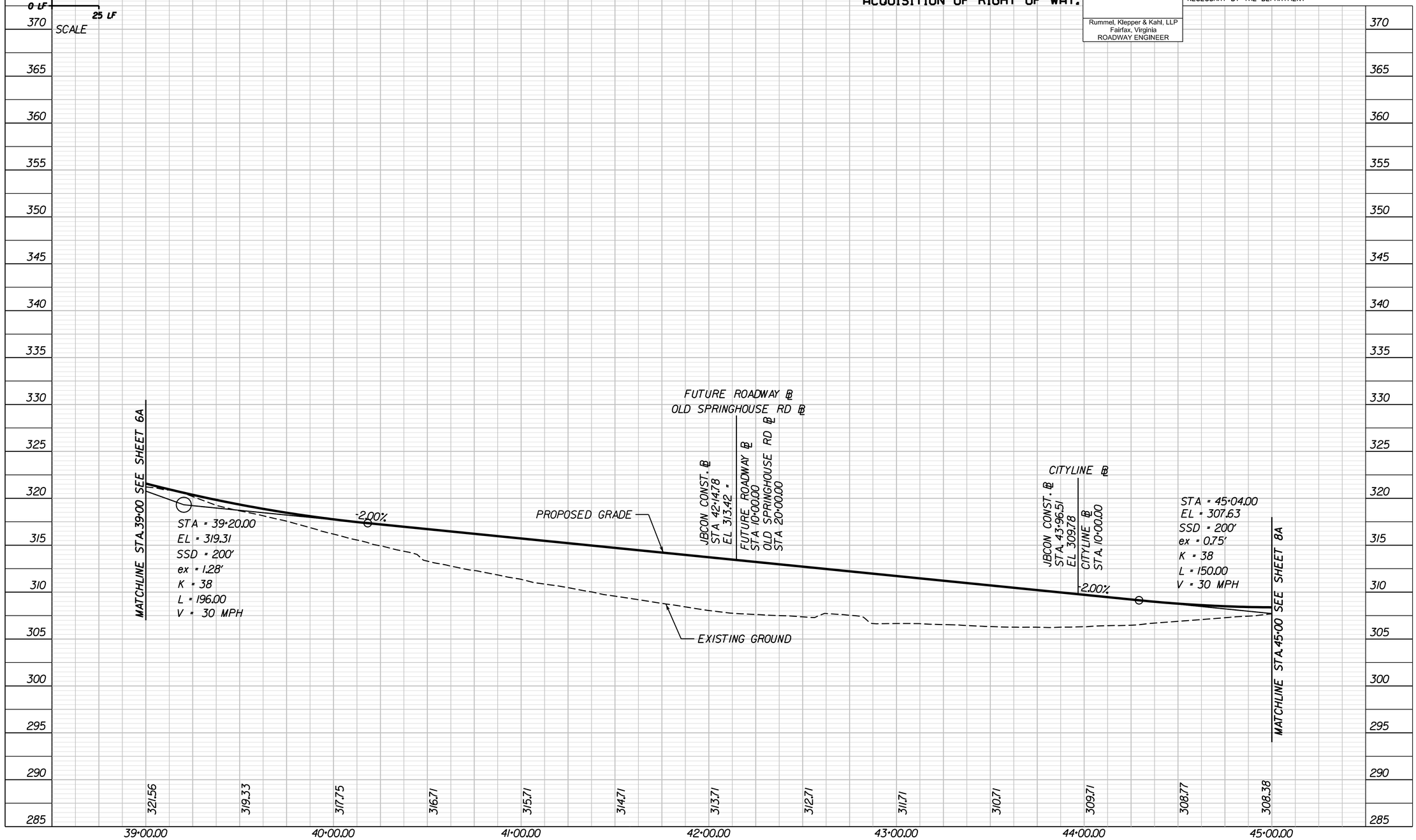

PROJECT	SHEET NO.
-	7A

1/17/2013

PROJECT MANAGER Sung S. Shin, PE (703) 877-5753
DESIGN SUPERVISED BY John M. McDowell, PE (703) 246-0028 (RKK)
DESIGNED BY Rummel, Klepper & Kahl, LLP (703) 246-0028

Rummel, Klepper & Kahl, LLP Fairfax, Virginia ROADWAY ENGINEER	Rummel, Klepper & Kahl, LLP Fairfax, Virginia HYDRAULIC ENGINEER

REVISED	STATE	STATE ROUTE	STATE PROJECT	SHEET NO
	VA.		8102 - 029 - 065	8

DESIGN FEATURES RELATING TO CONSTRUCTION OR TO REGULATION AND CONTROL OF TRAFFIC MAY BE SUBJECT TO CHANGE AS DEEMED NECESSARY BY THE DEPARTMENT.

NOTE: THE LANE CONFIGURATION AND STORAGE LENGTH DEDICATED TO BE FINALIZED BASED ON THE DETAILED TRAFFIC ANALYSIS RESULTS.

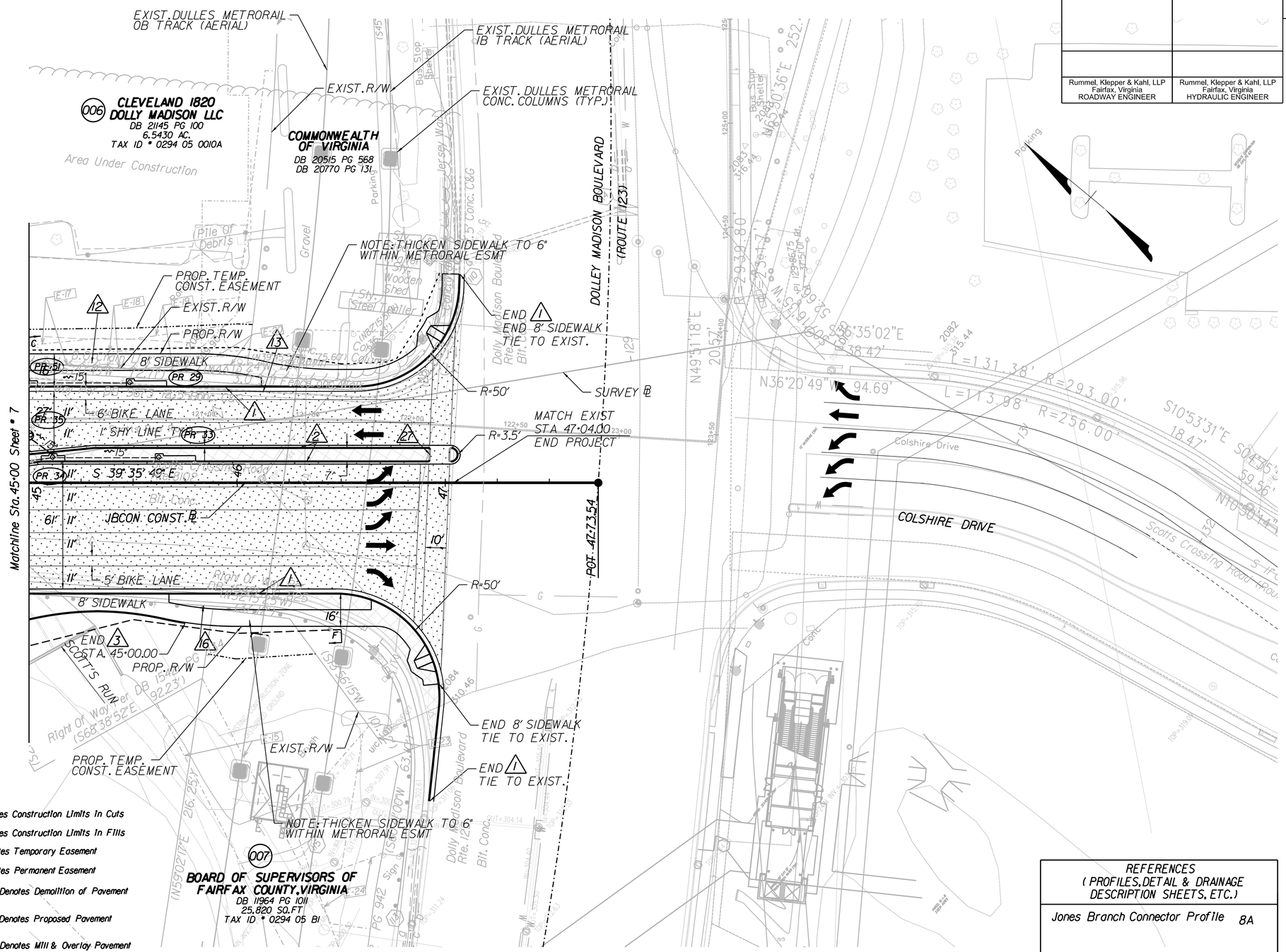

LEGEND

- C — Denotes Construction Limits In Cuts
- F — Denotes Construction Limits In Fills
- Denotes Temporary Easement
- Denotes Permanent Easement
- Denotes Demolition of Pavement
- Denotes Proposed Pavement
- Denotes Mill & Overlay Pavement
- Denotes Existing Bridge
- Denotes Proposed Bridge

NOTE: See Sheet IM for Incidental Legend

REFERENCES
(PROFILES, DETAIL & DRAINAGE DESCRIPTION SHEETS, ETC.)

Jones Branch Connector Profile 8A

THESE PLANS ARE UNFINISHED AND UNAPPROVED AND ARE NOT TO BE USED FOR ANY TYPE OF CONSTRUCTION OR THE ACQUISITION OF RIGHT OF WAY.

SCALE 0 25' 50'

PLAN NO.	PROJECT	SHEET NO.
	8102 - 029 - 065	8

PROJECT MANAGER Sung S. Shin, PE (703) 877-5753
SURVEYED BY <Surveyor Name (000) 000-0000 (District)>
DESIGN SUPERVISED BY John M. McDowell, P.E. (703) 246-0028 (RKK)
DESIGN BY Rummel, Klepper & Kahl, LLP (703) 246-0028

REVISED	STATE	STATE ROUTE	STATE PROJECT	SHEET NO.
	VA.	·	·	8A

THESE PLANS ARE UNFINISHED AND UNAPPROVED AND ARE NOT TO BE USED FOR ANY TYPE OF CONSTRUCTION OR THE ACQUISITION OF RIGHT OF WAY.

DESIGN FEATURES RELATING TO CONSTRUCTION OR TO REGULATION AND CONTROL OF TRAFFIC MAY BE SUBJECT TO CHANGE AS DEEMED NECESSARY BY THE DEPARTMENT

Rummel, Klepper & Kahl, LLP
Fairfax, Virginia
ROADWAY ENGINEER

JONES BRANCH CONNECTOR

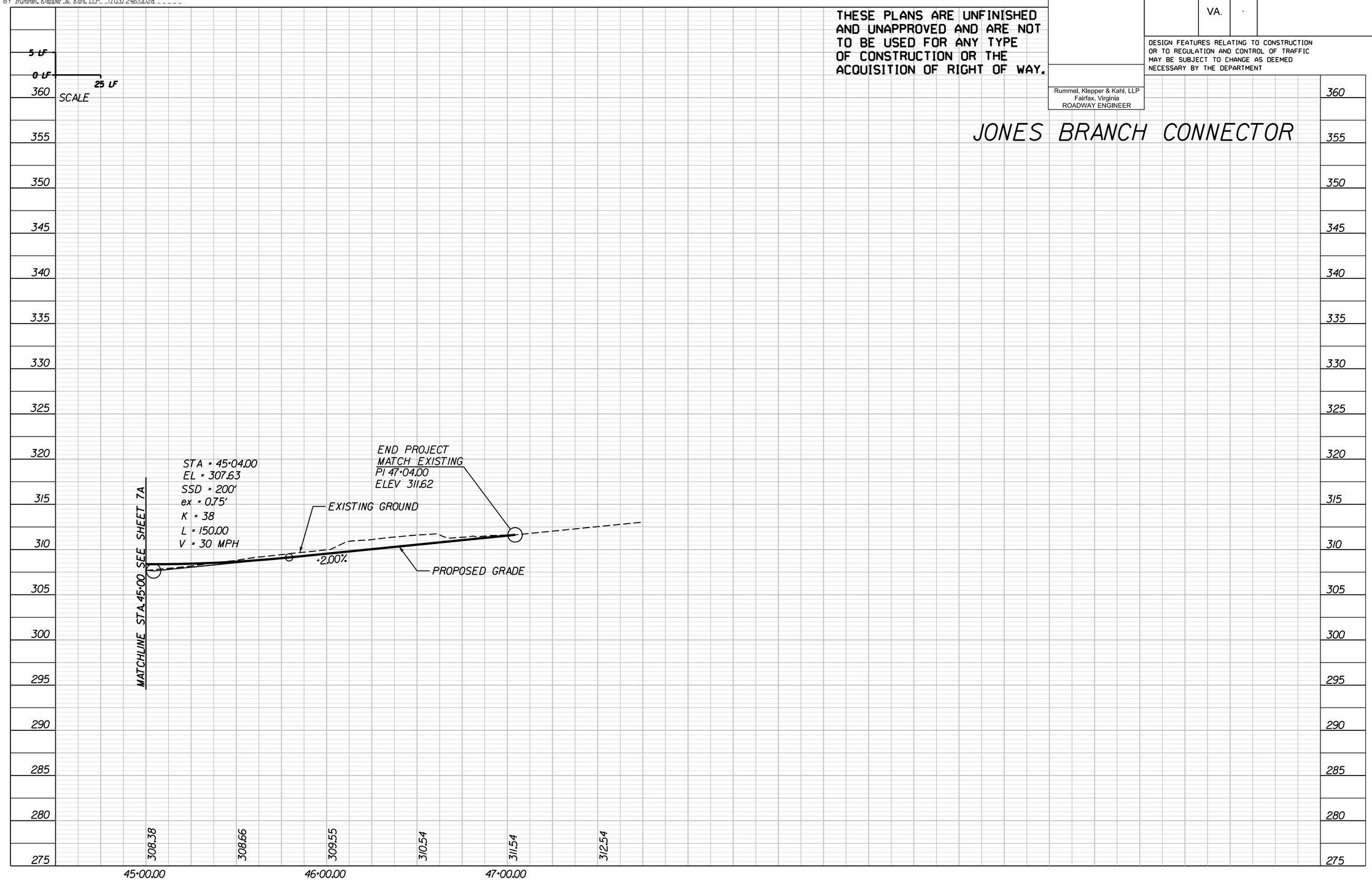

PROJECT	SHEET NO.
·	8A

1/17/2013

PROJECT MANAGER Sung S. Shin, PE (703) 877-5753
SURVEYED BY 350
DESIGN SUPERVISED BY John M. McDowell, PE (703)246-0028 (RKK)
DESIGNED BY Rummel, Klepper & Kahl, LLP (703)246-0028

THESE PLANS ARE UNFINISHED AND UNAPPROVED AND ARE NOT TO BE USED FOR ANY TYPE OF CONSTRUCTION OR THE ACQUISITION OF RIGHT OF WAY.

ENTRANCE PROFILE SHEET

DESIGN FEATURES RELATING TO CONSTRUCTION OR TO REGULATION AND CONTROL OF TRAFFIC MAY BE SUBJECT TO CHANGE AS DEEMED NECESSARY BY THE DEPARTMENT

REVISED	STATE	STATE ROUTE	STATE PROJECT	SHEET NO.
	VA.			9

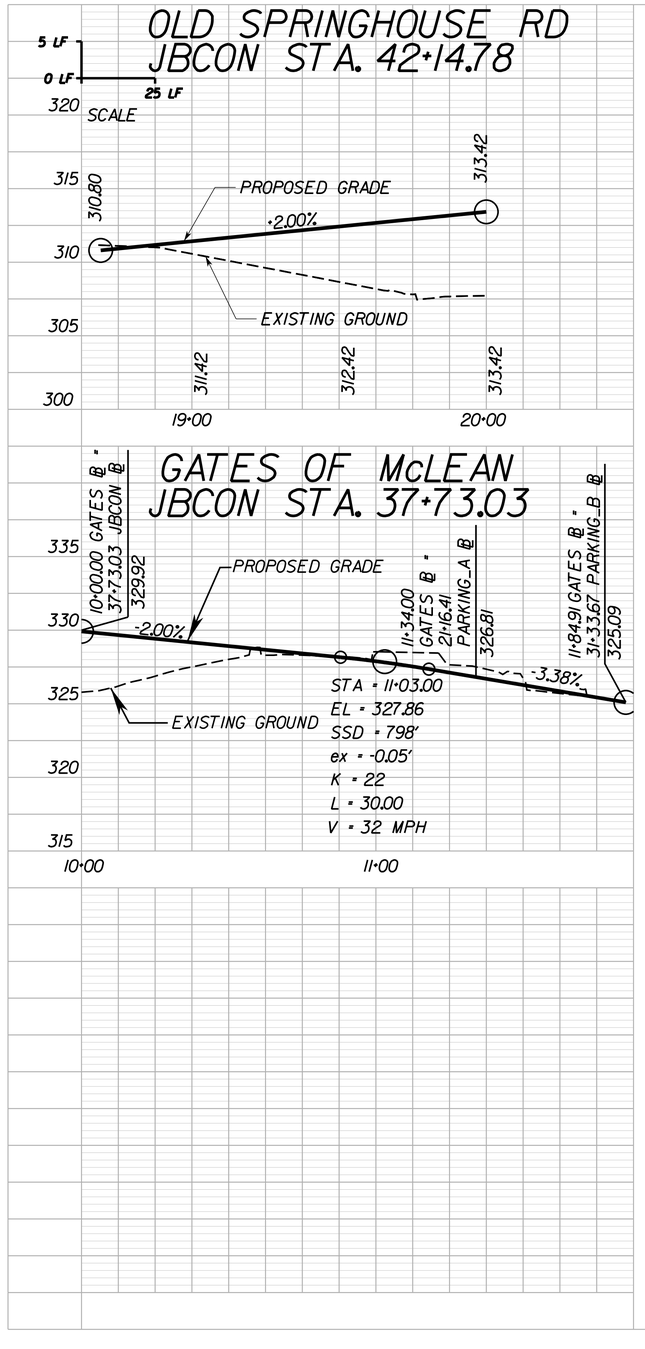

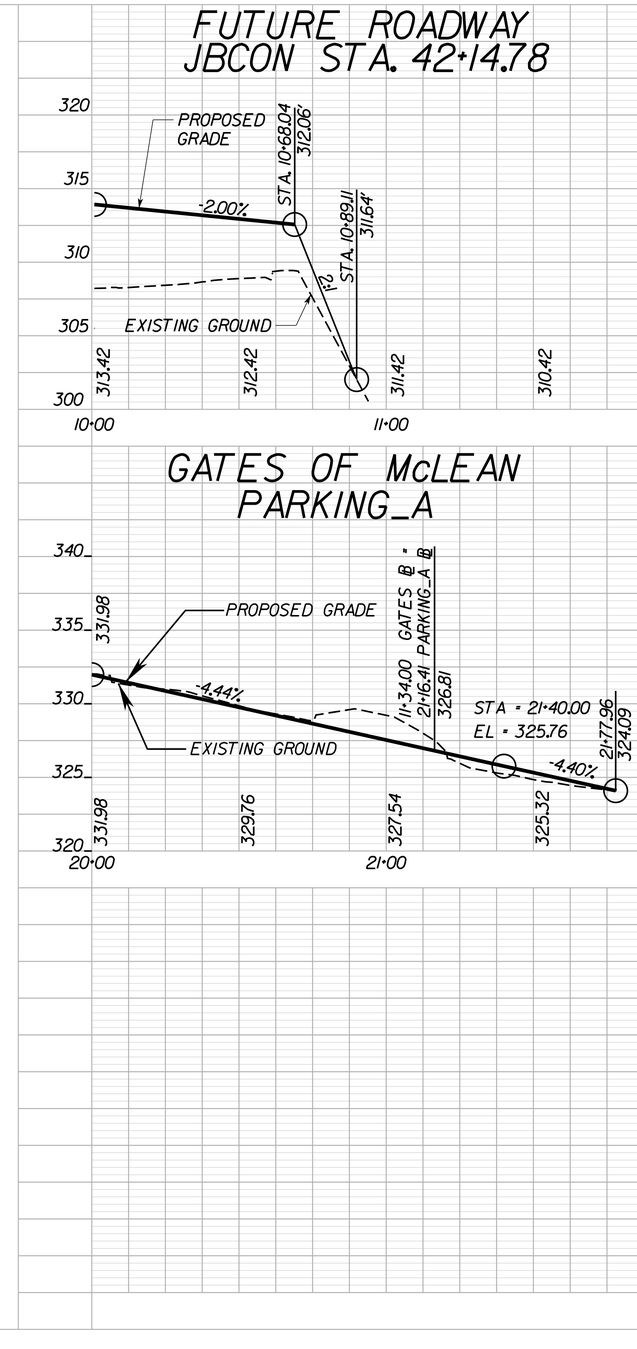

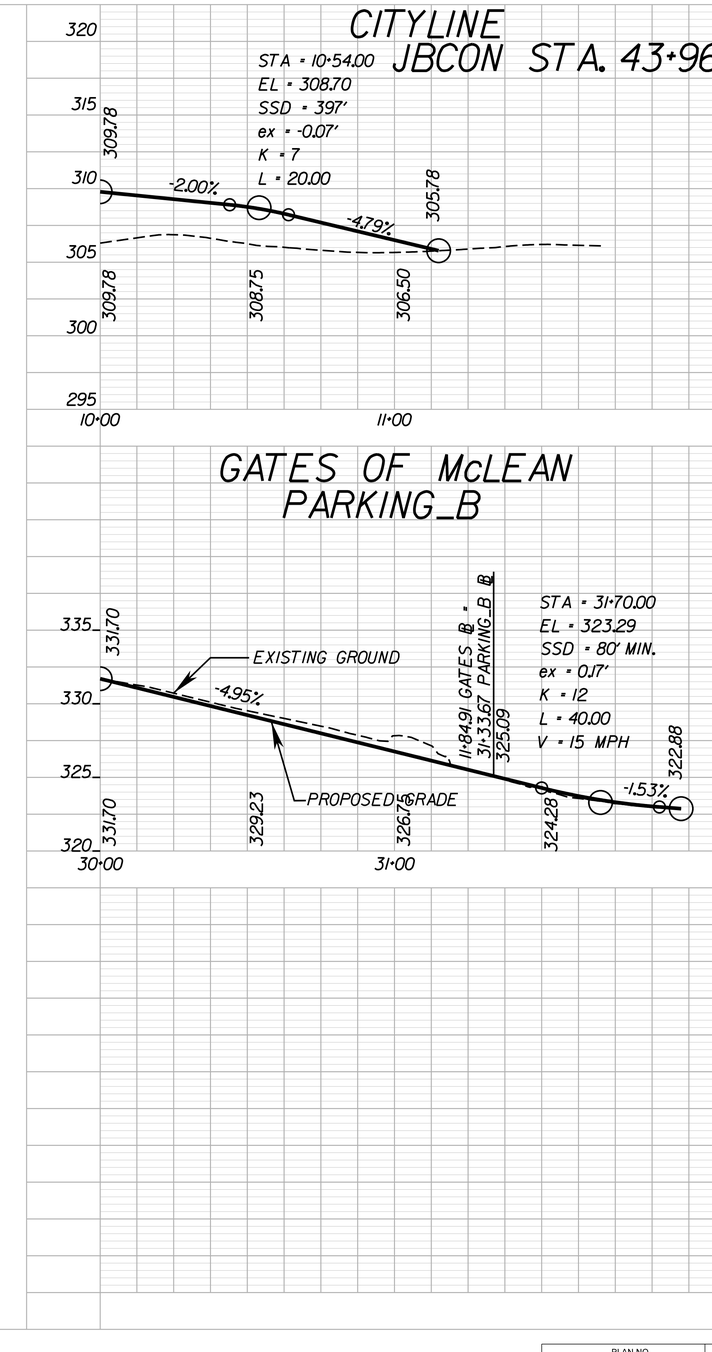

PLAN NO.	PROJECT	SHEET NO.
		9

1/17/2013

SURVEYED BY _____
SUPERVISED BY _____
DESIGNED BY _____

CONCEPTUAL LANDSCAPE PLANS

DESIGN FEATURES RELATING TO CONSTRUCTION OR TO REGULATION AND CONTROL OF TRAFFIC MAY BE SUBJECT TO CHANGE AS DEEMED NECESSARY BY THE DEPARTMENT

REVISED	STATE	FEDERAL AID PROJECT	STATE ROUTE	STATE PROJECT	SHEET NO.
	VA.				15(1)

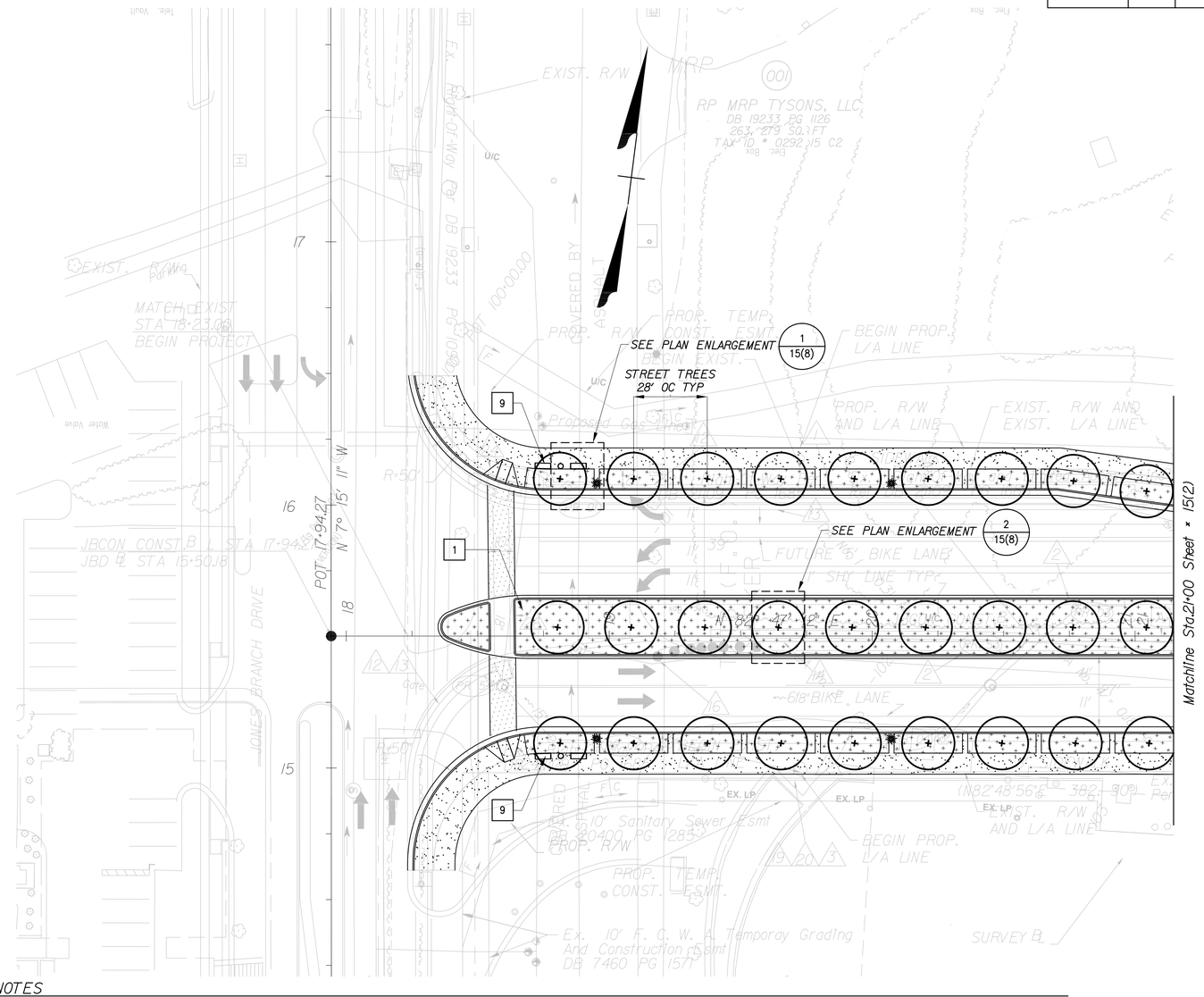

LEGEND

- Tree
- Concrete paving with banding
- Special in-road paving
- Crosswalk (thermoplastic markings or stamped asphalt)
- Planting area (native grasses, perennials, and shrubs)
- Revegetation zone (shrubs and groundcovers)
- Street lights

NOTES

1. Sightlines to be verified pending final design
2. Bridge guardrail with incorporated architectural treatment pending finalization of design
3. Median island architectural treatment
4. Gutter pan with rolled curb
5. Fire access lane to be flush with sidewalk
6. Retaining wall
7. Special architectural treatment/texture on concrete wall
8. Special planting area at base of wall; See detail D/15(9)
9. Street furniture: two benches and one trash receptacle

0' 10' 25' 50'
Scale: 1"=25'

PLAN NO.	PROJECT	FILE NO.	SHEET NO.
			15(1)

SURVEYED BY _____
SUPERVISED BY _____
DESIGNED BY _____

CONCEPTUAL LANDSCAPE PLANS

DESIGN FEATURES RELATING TO CONSTRUCTION OR TO REGULATION AND CONTROL OF TRAFFIC MAY BE SUBJECT TO CHANGE AS DEEMED NECESSARY BY THE DEPARTMENT

REVISED	STATE	FEDERAL AID PROJECT	STATE ROUTE	STATE PROJECT	SHEET NO.
	VA.				15(2)

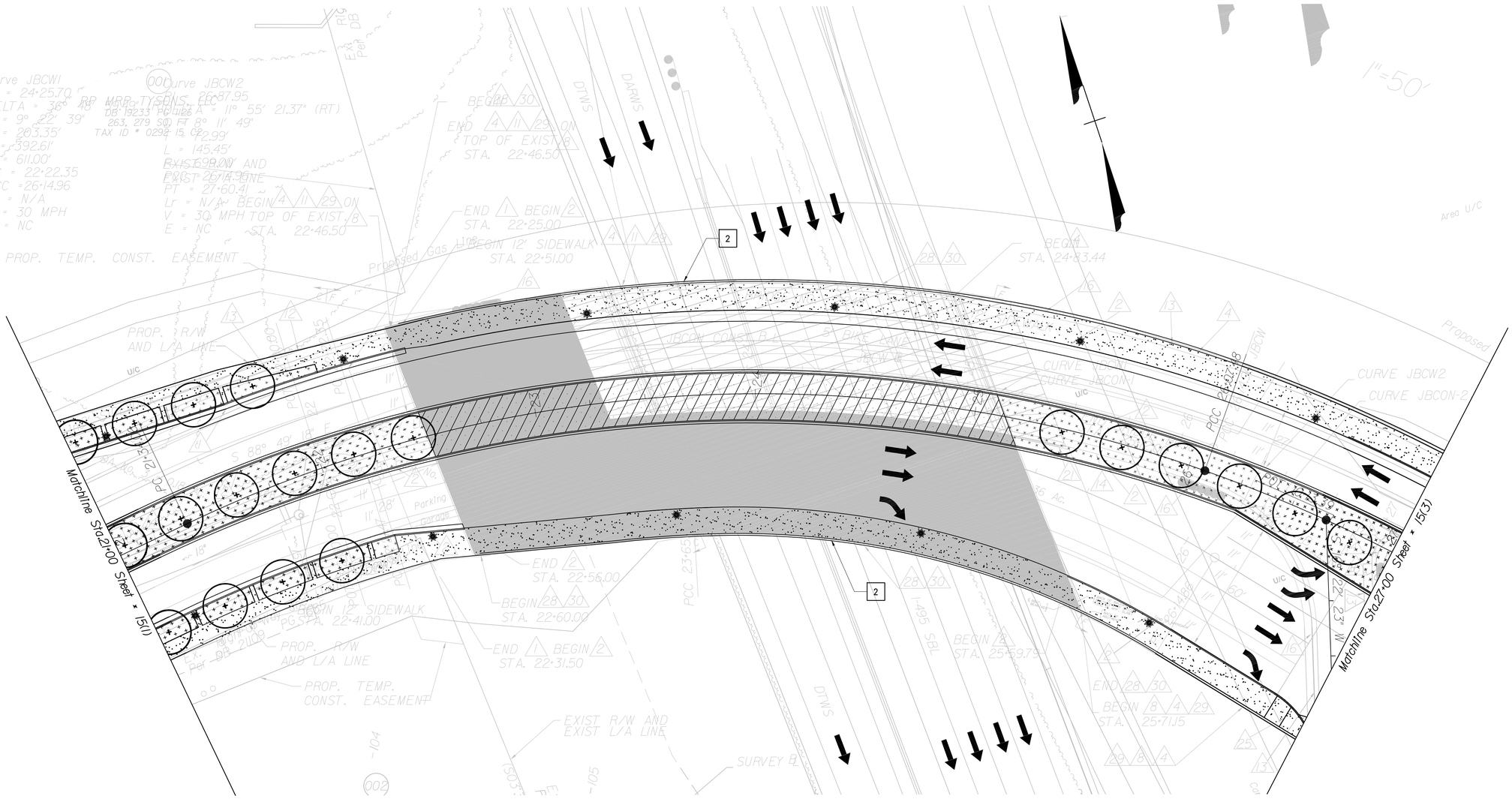

LEGEND

- Tree
- Concrete paving with banding
- Special in-road paving
- Crosswalk (thermoplastic markings or stamped asphalt)
- Planting area (native grasses, perennials, and shrubs)
- Revegetation zone (shrubs and groundcovers)
- Street lights

NOTES

1. Sightlines to be verified pending final design
2. Bridge guardrail with incorporated architectural treatment pending finalization of design
3. Median island architectural treatment
4. Gutter pan with rolled curb
5. Fire access lane to be flush with sidewalk
6. Retaining wall
7. Special architectural treatment/texture on concrete wall
8. Special planting area at base of wall; See detail D / 15(9)
9. Street furniture: two benches and one trash receptacle

0' 10' 25' 50'
Scale: 1"=25'

PLAN NO.	PROJECT	FILE NO.	SHEET NO.
			15(2)

SURVEYED BY _____
SUPERVISED BY _____
DESIGNED BY _____

DESIGN FEATURES RELATING TO CONSTRUCTION OR TO REGULATION AND CONTROL OF TRAFFIC MAY BE SUBJECT TO CHANGE AS DEEMED NECESSARY BY THE DEPARTMENT

REVISED	STATE	FEDERAL AID PROJECT	STATE ROUTE	STATE PROJECT	SHEET NO.
	VA.				15(3)

CONCEPTUAL LANDSCAPE PLANS

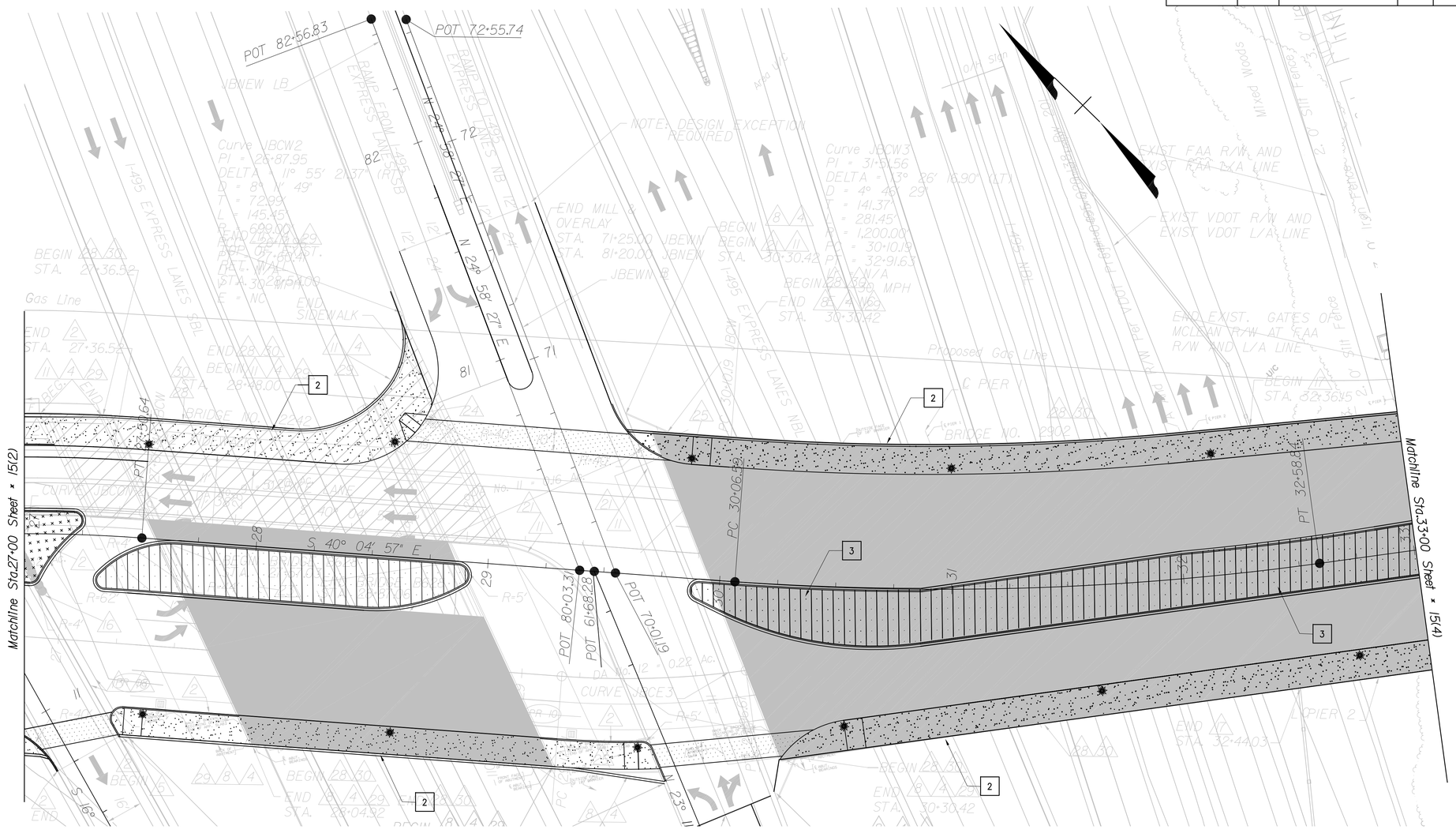

LEGEND

- Tree
- Concrete paving with banding
- Special in-road paving
- Crosswalk (thermoplastic markings or stamped asphalt)
- Planting area (native grasses, perennials, and shrubs)
- Revegetation zone (shrubs and groundcovers)
- Street lights

NOTES

1. Sightlines to be verified pending final design
2. Bridge guardrail with incorporated architectural treatment pending finalization of design
3. Median island architectural treatment
4. Gutter pan with rolled curb
5. Fire access lane to be flush with sidewalk
6. Retaining wall
7. Special architectural treatment/texture on concrete wall
8. Special planting area at base of wall; See detail D / 15(9)
9. Street furniture: two benches and one trash receptacle

0' 10' 25' 50'
Scale: 1"=25'

PLAN NO.	PROJECT	FILE NO.	SHEET NO.
			15(3)

SURVEYED BY _____
SUPERVISED BY _____
DESIGNED BY _____

CONCEPTUAL LANDSCAPE PLANS

DESIGN FEATURES RELATING TO CONSTRUCTION OR TO REGULATION AND CONTROL OF TRAFFIC MAY BE SUBJECT TO CHANGE AS DEEMED NECESSARY BY THE DEPARTMENT

REVISED	STATE	FEDERAL AID PROJECT	STATE ROUTE	STATE PROJECT	SHEET NO.
	VA.				15(4)

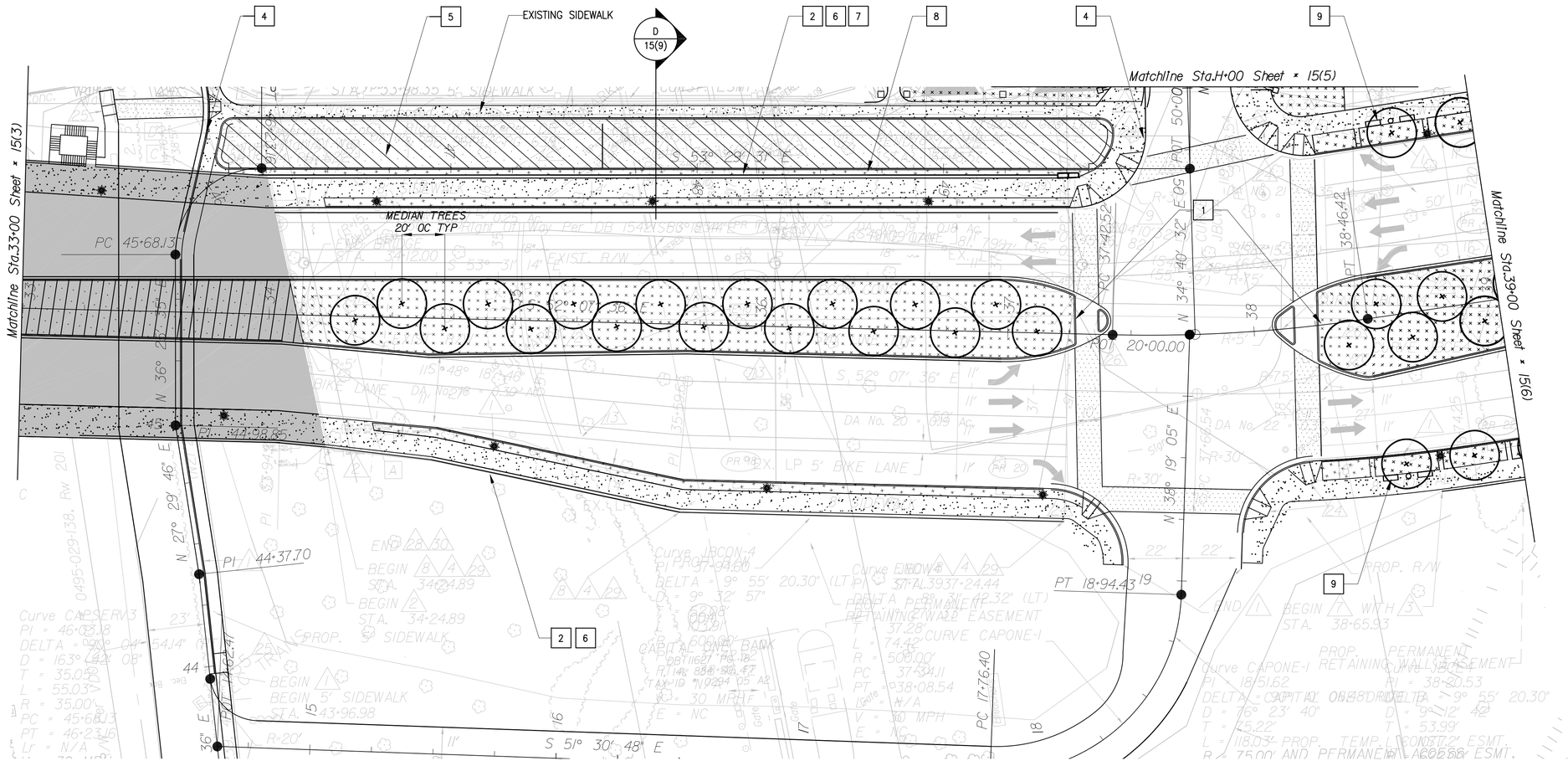

LEGEND

- Tree
- Concrete paving with banding
- Special in-road paving
- Crosswalk (thermoplastic markings or stamped asphalt)
- Planting area (native grasses, perennials, and shrubs)
- Revegetation zone (shrubs and groundcovers)
- Street lights

NOTES

1. Sightlines to be verified pending final design
2. Bridge guardrail with incorporated architectural treatment pending finalization of design
3. Median island architectural treatment
4. Gutter pan with rolled curb
5. Fire access lane to be flush with sidewalk
6. Retaining wall
7. Special architectural treatment/texture on concrete wall
8. Special planting area at base of wall; See detail D 15(9)
9. Street furniture: two benches and one trash receptacle

0' 10' 25' 50'
Scale: 1"=25'

PLAN NO.	PROJECT	FILE NO.	SHEET NO.
			15(4)

SURVEYED BY _____
SUPERVISED BY _____
DESIGN BY _____

CONCEPTUAL LANDSCAPE PLANS

DESIGN FEATURES RELATING TO CONSTRUCTION OR TO REGULATION AND CONTROL OF TRAFFIC MAY BE SUBJECT TO CHANGE AS DEEMED NECESSARY BY THE DEPARTMENT

REVISED	STATE	FEDERAL AID PROJECT	STATE ROUTE	STATE PROJECT	SHEET NO.
	VA.				15(5)

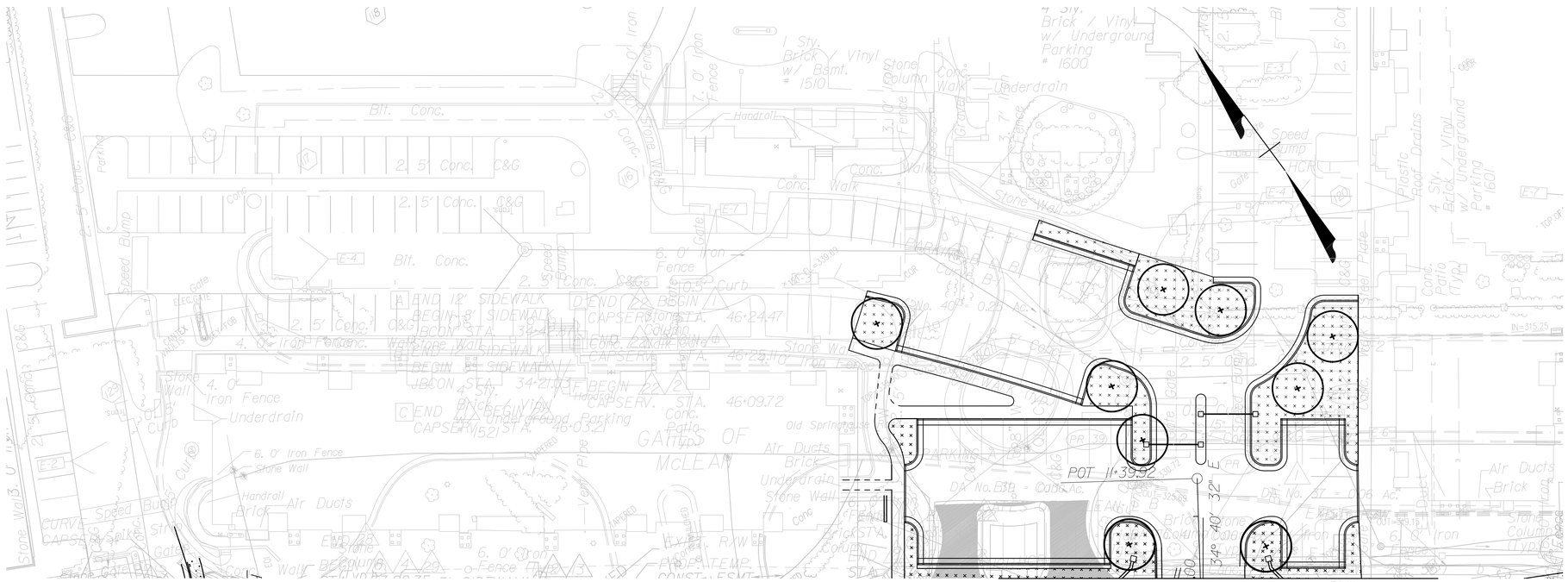

LEGEND

- Tree
- Concrete paving with banding
- Special in-road paving
- Crosswalk (thermoplastic markings or stamped asphalt)
- Planting area (native grasses, perennials, and shrubs)
- Revegetation zone (shrubs and groundcovers)
- Street lights

NOTES

1. Sightlines to be verified pending final design
2. Bridge guardrail with incorporated architectural treatment pending finalization of design
3. Median island architectural treatment
4. Gutter pan with rolled curb
5. Fire access lane to be flush with sidewalk
6. Retaining wall
7. Special architectural treatment/texture on concrete wall
8. Special planting area at base of wall; See detail D / 15(9)
9. Street furniture: two benches and one trash receptacle

0' 10' 25' 50'
Scale: 1"=25'

PLAN NO.	PROJECT	FILE NO.	SHEET NO.
			15(5)

SURVEYED BY _____
SUPERVISED BY _____
DESIGNED BY _____

CONCEPTUAL LANDSCAPE PLANS

DESIGN FEATURES RELATING TO CONSTRUCTION OR TO REGULATION AND CONTROL OF TRAFFIC MAY BE SUBJECT TO CHANGE AS DEEMED NECESSARY BY THE DEPARTMENT

REVISED	STATE	FEDERAL AID PROJECT	STATE ROUTE	STATE PROJECT	SHEET NO.
	VA.				15(6)

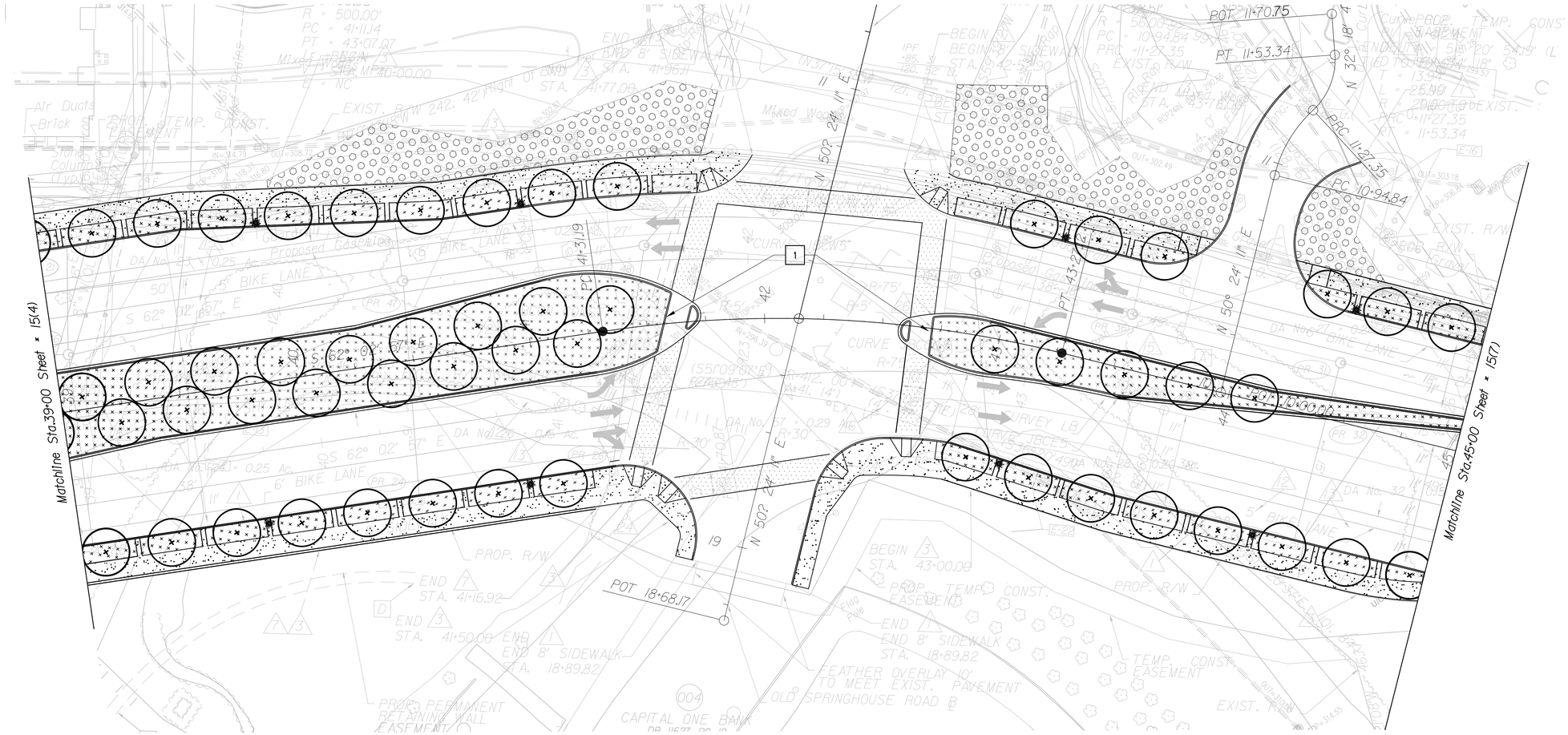

LEGEND

- Tree
- Concrete paving with banding
- Special in-road paving
- Crosswalk (thermoplastic markings or stamped asphalt)
- Planting area (native grasses, perennials, and shrubs)
- Revegetation zone (shrubs and groundcovers)
- Street lights

NOTES

1. Sightlines to be verified pending final design
2. Bridge guardrail with incorporated architectural treatment pending finalization of design
3. Median island architectural treatment
4. Gutter pan with rolled curb
5. Fire access lane to be flush with sidewalk
6. Retaining wall
7. Special architectural treatment/texture on concrete wall
8. Special planting area at base of wall; See detail D / 15(9)
9. Street furniture: two benches and one trash receptacle

0' 10' 25' 50'
Scale: 1"=25'

PLAN NO.	PROJECT	FILE NO.	SHEET NO.
			15(6)

SURVEYED BY _____
SUPERVISED BY _____
DESIGNED BY _____

CONCEPTUAL LANDSCAPE PLANS

DESIGN FEATURES RELATING TO CONSTRUCTION OR TO REGULATION AND CONTROL OF TRAFFIC MAY BE SUBJECT TO CHANGE AS DEEMED NECESSARY BY THE DEPARTMENT

REVISED	STATE	FEDERAL AID PROJECT	STATE ROUTE	STATE PROJECT	SHEET NO.
	VA.				15(7)

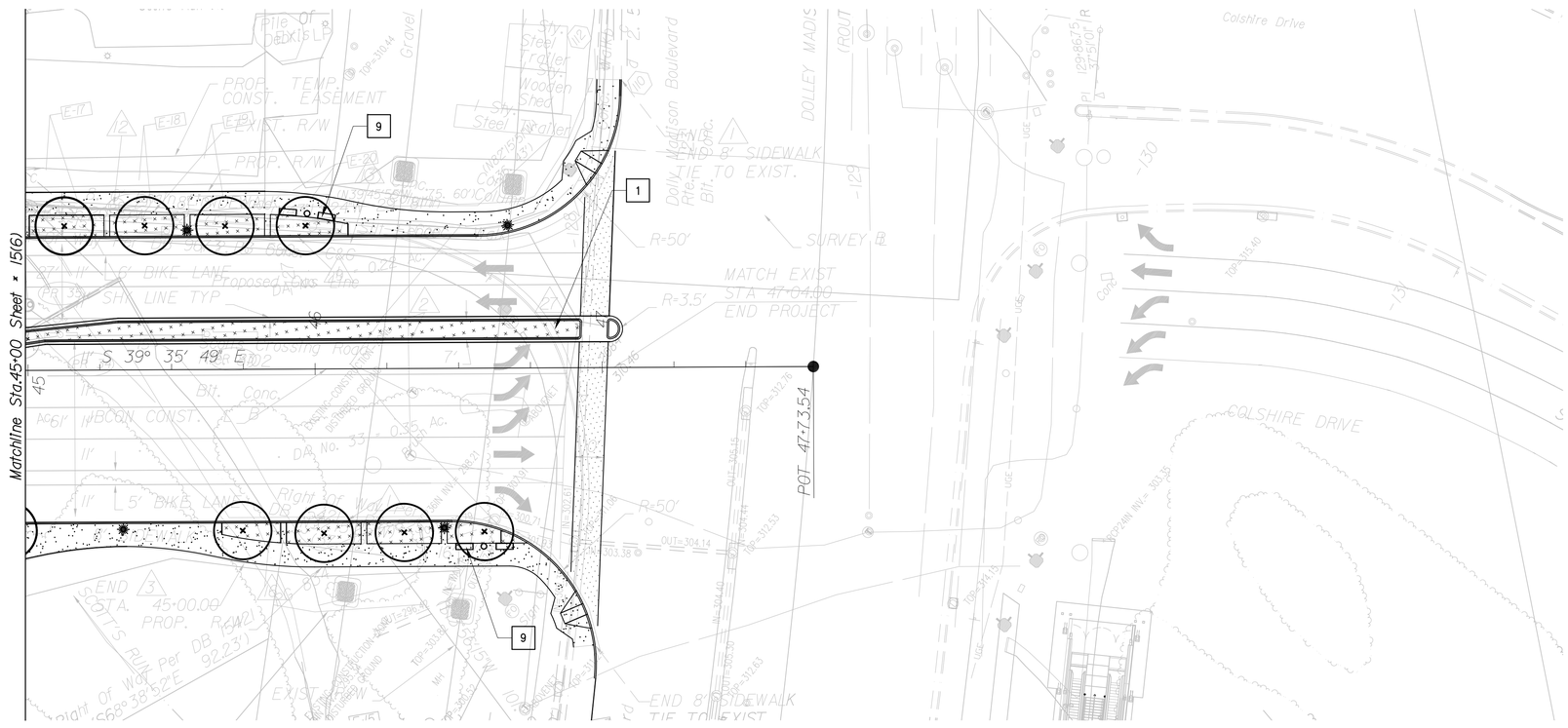

LEGEND

- Tree
- Concrete paving with banding
- Special in-road paving
- Crosswalk (thermoplastic markings or stamped asphalt)
- Planting area (native grasses, perennials, and shrubs)
- Revegetation zone (shrubs and groundcovers)
- Street lights

NOTES

1. Sightlines to be verified pending final design
2. Bridge guardrail with incorporated architectural treatment pending finalization of design
3. Median island architectural treatment
4. Gutter pan with rolled curb
5. Fire access lane to be flush with sidewalk
6. Retaining wall
7. Special architectural treatment/texture on concrete wall
8. Special planting area at base of wall; See detail D / 15(9)
9. Street furniture: two benches and one trash receptacle

0' 10' 25' 50'
Scale: 1"=25'

PLAN NO.	PROJECT	FILE NO.	SHEET NO.
			15(7)

SURVEYED BY _____
SUPERVISED BY _____
DESIGNED BY _____

CONCEPTUAL LANDSCAPE PLANS

DESIGN FEATURES RELATING TO CONSTRUCTION OR TO REGULATION AND CONTROL OF TRAFFIC MAY BE SUBJECT TO CHANGE AS DEEMED NECESSARY BY THE DEPARTMENT

REVISED	STATE	FEDERAL AID PROJECT	STATE ROUTE	STATE PROJECT	SHEET NO.
	VA.				15(8)

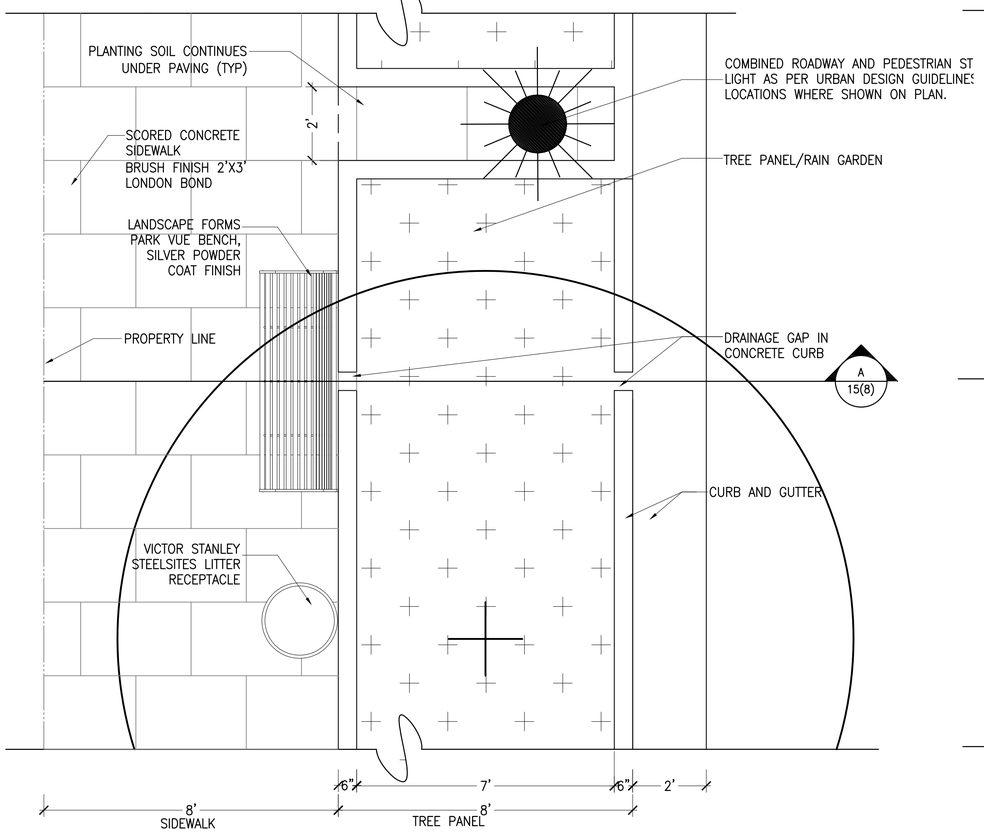

1 PLAN ENLARGEMENT: TYPICAL SIDEWALK + TREE PANEL/RAIN GARDEN
1/2"=1'

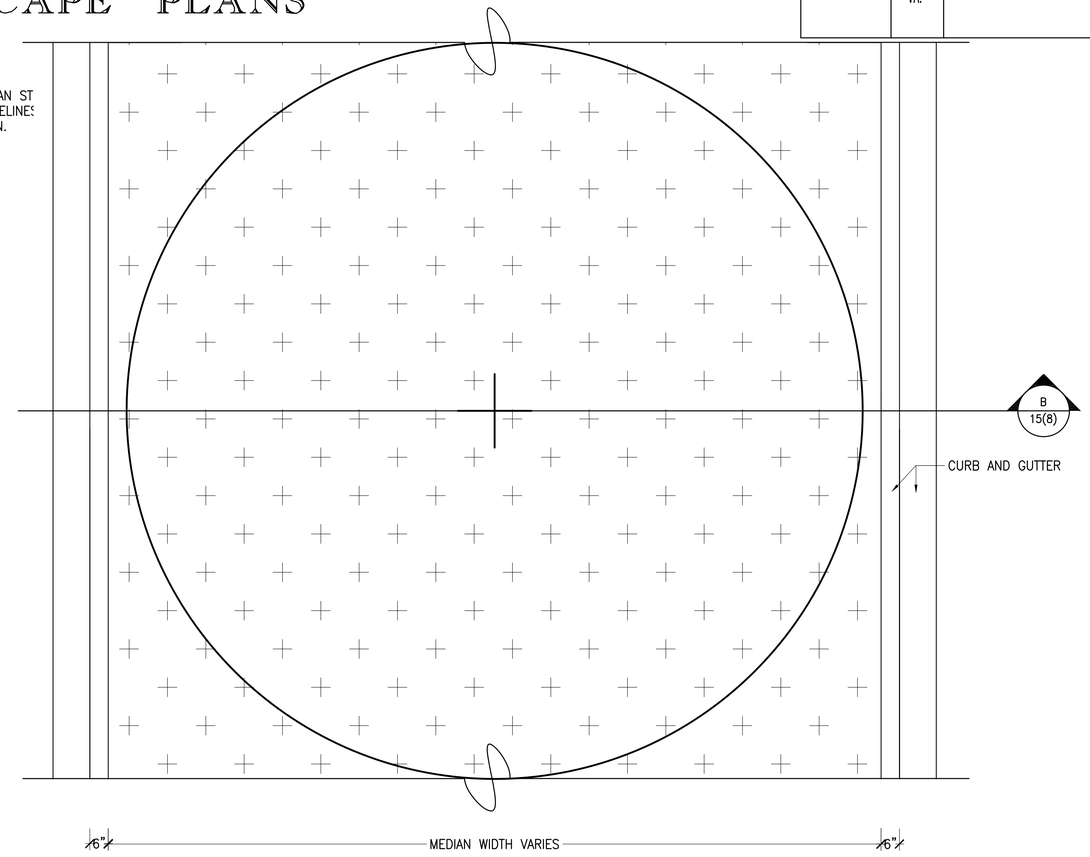

2 PLAN ENLARGEMENT: TYPICAL MEDIAN
1/2"=1'

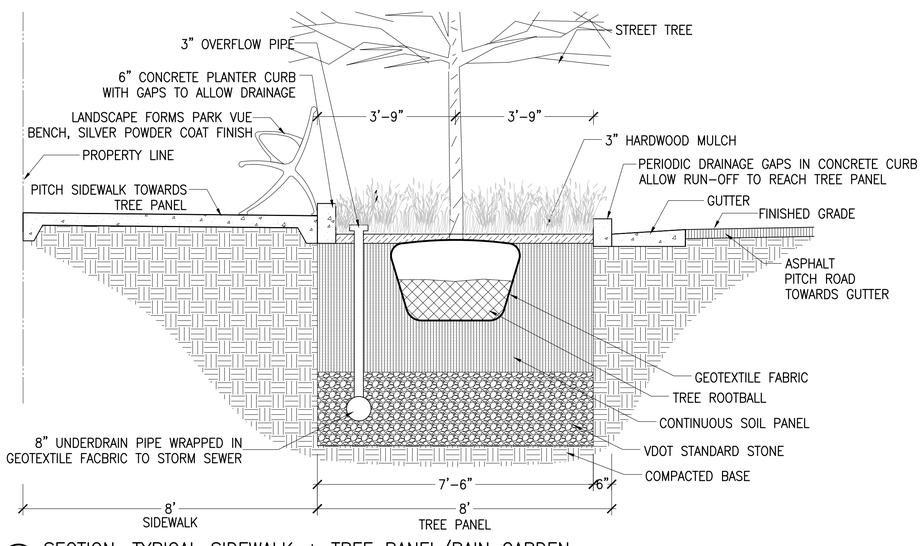

A SECTION: TYPICAL SIDEWALK + TREE PANEL/RAIN GARDEN
1/2"=1'

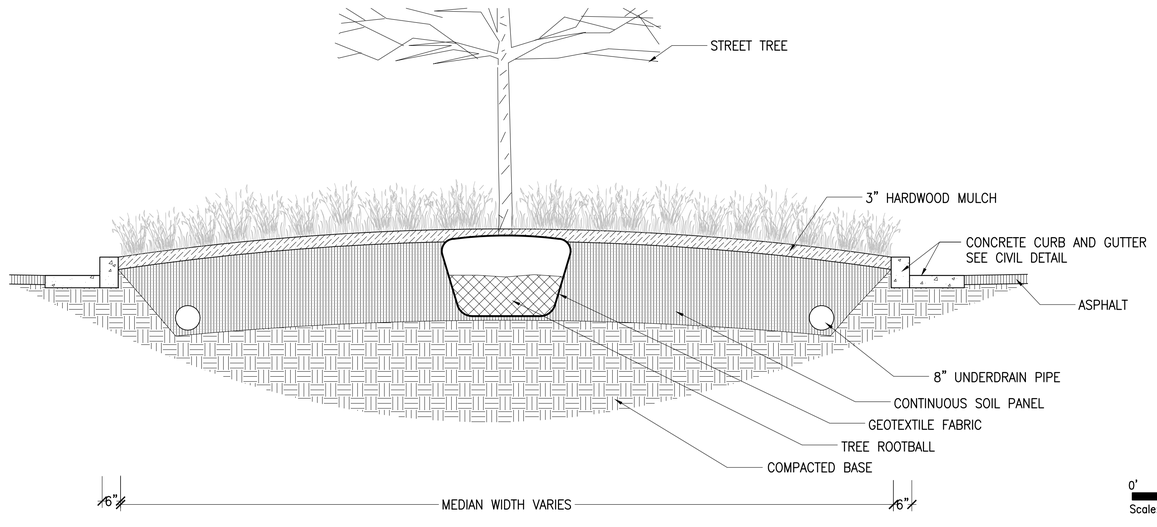

0' 1' 2' 3' 4'
Scale: 1/2"=1'

B SECTION: TYPICAL MEDIAN
1/2"=1'

PLAN NO.	PROJECT	FILE NO.	SHEET NO.
			15(8)

SURVEYED BY _____
SUPERVISED BY _____
DESIGNED BY _____

CONCEPTUAL LANDSCAPE PLANS

DESIGN FEATURES RELATING TO CONSTRUCTION OR TO REGULATION AND CONTROL OF TRAFFIC MAY BE SUBJECT TO CHANGE AS DEEMED NECESSARY BY THE DEPARTMENT

REVISED	STATE	FEDERAL AID PROJECT	STATE ROUTE	STATE PROJECT	SHEET NO.
	VA.				15(9)

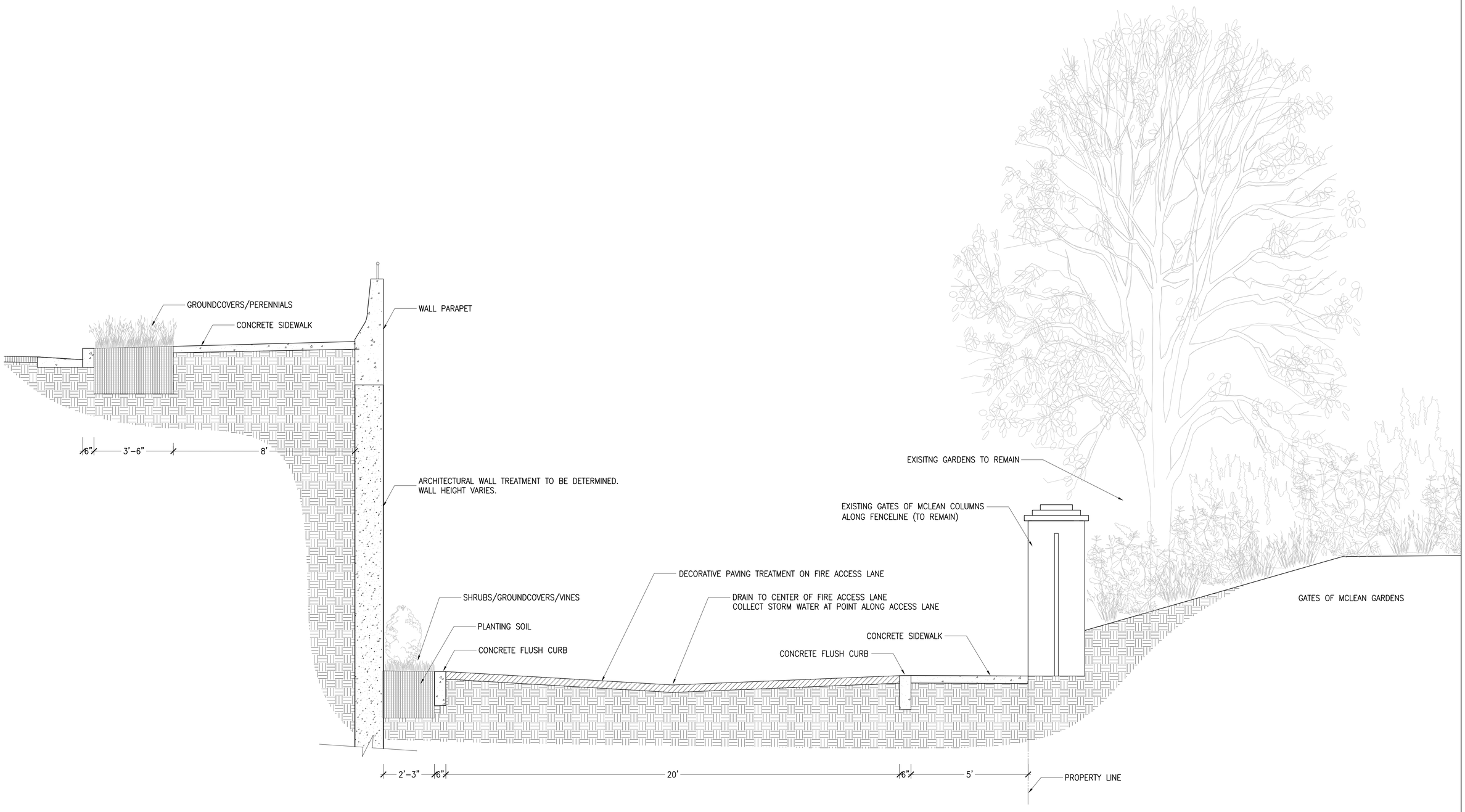

(D) SECTION: TYPICAL RETAINING WALL + FIRE ACCESS LANE
1/2"=1'

0' 1' 2' 3' 4'
Scale: 1/2"=1'

PLAN NO.	PROJECT	FILE NO.	SHEET NO.
			15(9)

d0707tlay_1bc.dgn
$DGNLEV

PROJECT MANAGER Sung S. Shin, PE (703) 877-5753 (RKK)
SURVEYED BY
DESIGN SUPERVISED BY John M. McDowell, PE (703) 246-0028 (RKK)
DESIGNED BY Rummel, Klepper & Kahl, LLP (703) 246-0028

CROSS SECTIONS

SCALE 1 IN. = 10 FT

DESIGN FEATURES RELATING TO CONSTRUCTION OR TO REGULATION AND CONTROL OF TRAFFIC MAY BE SUBJECT TO CHANGE AS DEEMED NECESSARY BY THE DEPARTMENT

REVISED	STATE	STATE ROUTE	STATE PROJECT	SHEET NO.
	VA.		8102 - 029 - 065	X-1

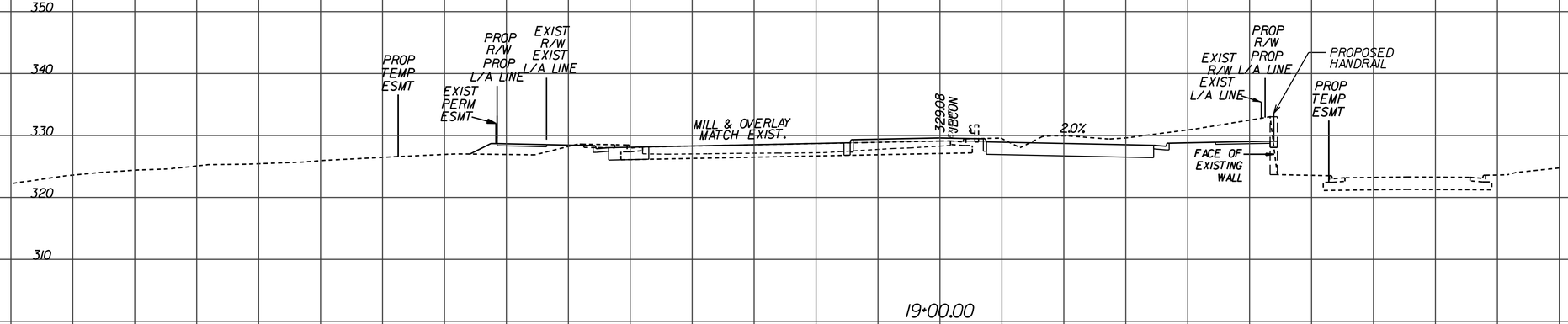

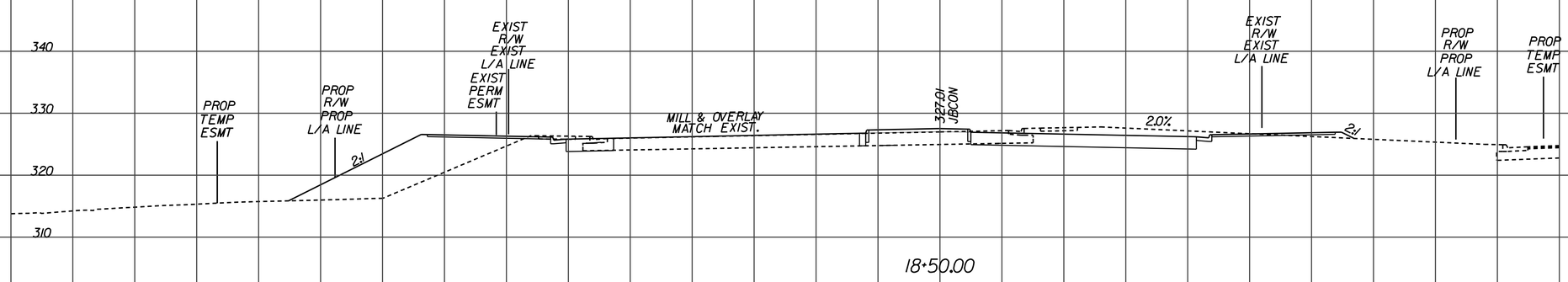

JONES BRANCH CONNECTOR

Station 18+50.00 To Station 19+00.00

150 100 50 0 50 100 150

PROJECT	SHEET NO.
8102 - 029 - 065	X-1

1/17/2013

d0707tlay_1bc.dgn
$DGNLEV

PROJECT MANAGER Sung S. Shin, PE (703) 877-5753 (RKK)
SURVEYED BY
DESIGN SUPERVISED BY John M. McDowell, PE (703) 246-0028 (RKK)
DESIGNED BY Rummel, Klepper & Kahl, LLP (703) 246-0028

CROSS SECTIONS

SCALE 1 IN. = 10 FT

DESIGN FEATURES RELATING TO CONSTRUCTION OR TO REGULATION AND CONTROL OF TRAFFIC MAY BE SUBJECT TO CHANGE AS DEEMED NECESSARY BY THE DEPARTMENT

REVISED	STATE	STATE ROUTE	STATE PROJECT	SHEET NO
	VA.		8102 - 029 - 065	X-2

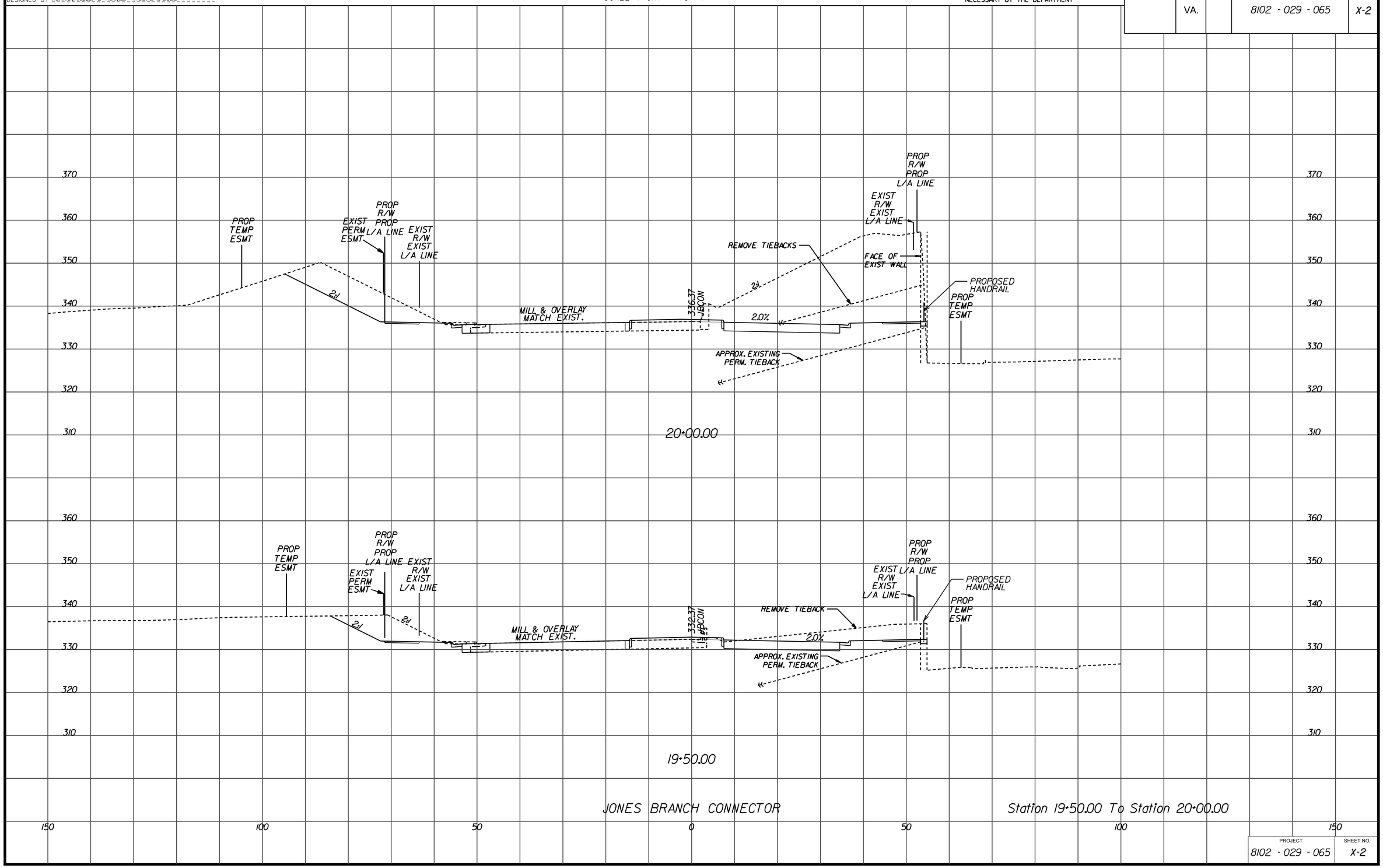

JONES BRANCH CONNECTOR

Station 19+50.00 To Station 20+00.00

PROJECT	SHEET NO.
8102 - 029 - 065	X-2

1/17/2013

d07077lay_1bc.dgn
$DGNLEV

PROJECT MANAGER Sung S. Shin, PE (703) 877-5753 (RKK)
SURVEYED BY
DESIGN SUPERVISED BY John M. McDowell, PE (703) 246-0028 (RKK)
DESIGNED BY Rummel, Klepper & Kahl, LLP (703) 246-0028

CROSS SECTIONS

SCALE 1 IN. = 10 FT

DESIGN FEATURES RELATING TO CONSTRUCTION OR TO REGULATION AND CONTROL OF TRAFFIC MAY BE SUBJECT TO CHANGE AS DEEMED NECESSARY BY THE DEPARTMENT

REVISED	STATE	STATE ROUTE	STATE PROJECT	SHEET NO
	VA.		8102 - 029 - 065	X-3

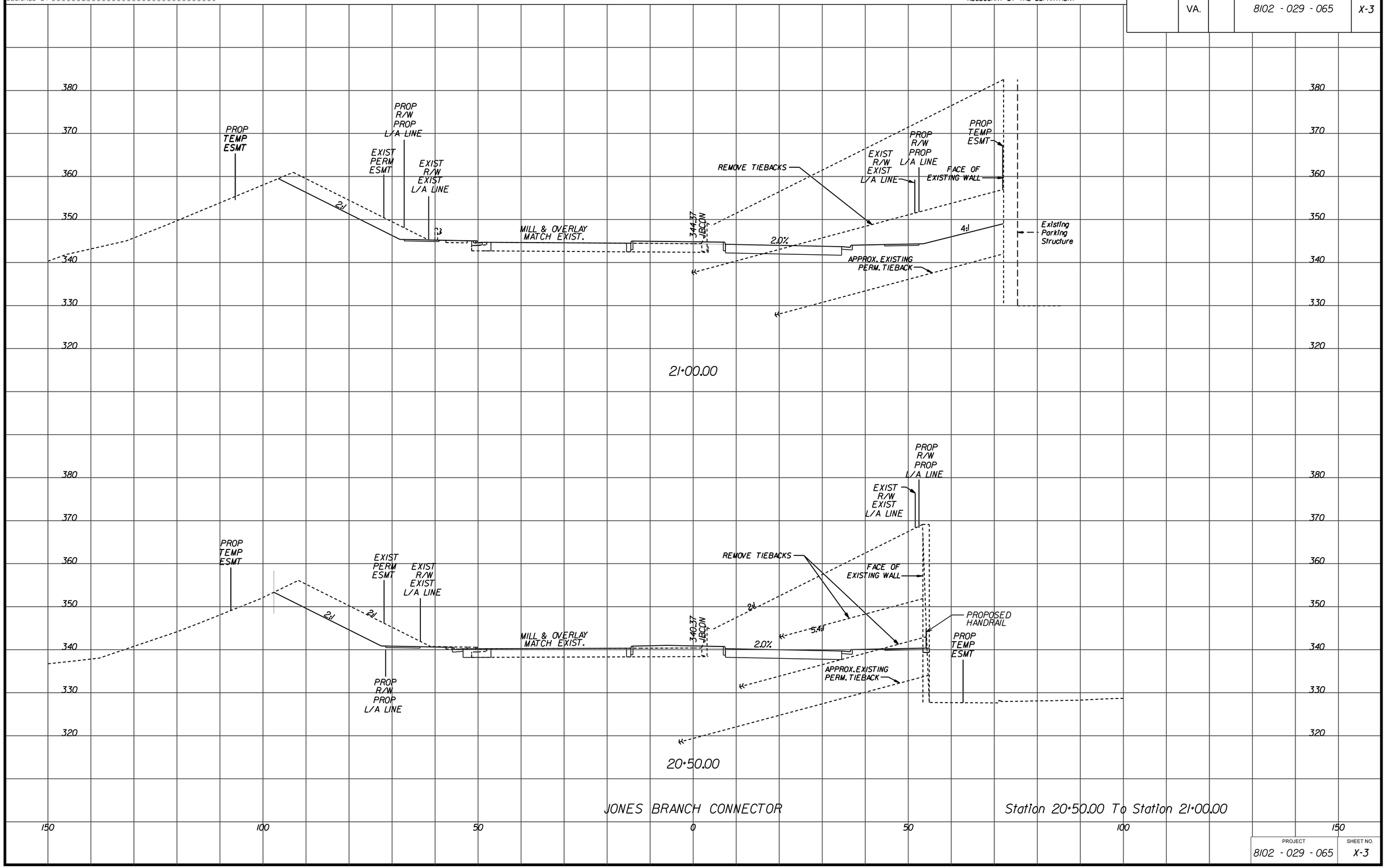

JONES BRANCH CONNECTOR

Station 20+50.00 To Station 21+00.00

PROJECT	SHEET NO.
8102 - 029 - 065	X-3

1/17/2013

d0707tlay_1bc.dgn
$DGNLEV

PROJECT MANAGER Sung S. Shin, PE (703) 877-5753 (RKK)
SURVEYED BY
DESIGN SUPERVISED BY John M. McDowell, PE (703) 246-0028 (RKK)
DESIGNED BY Rummel, Klepper & Kahl, LLP (703) 246-0028

CROSS SECTIONS

SCALE 1 IN. = 10 FT

DESIGN FEATURES RELATING TO CONSTRUCTION OR TO REGULATION AND CONTROL OF TRAFFIC MAY BE SUBJECT TO CHANGE AS DEEMED NECESSARY BY THE DEPARTMENT

REVISED	STATE	STATE ROUTE	STATE PROJECT	SHEET NO.
	VA.		8102 - 029 - 065	X-4

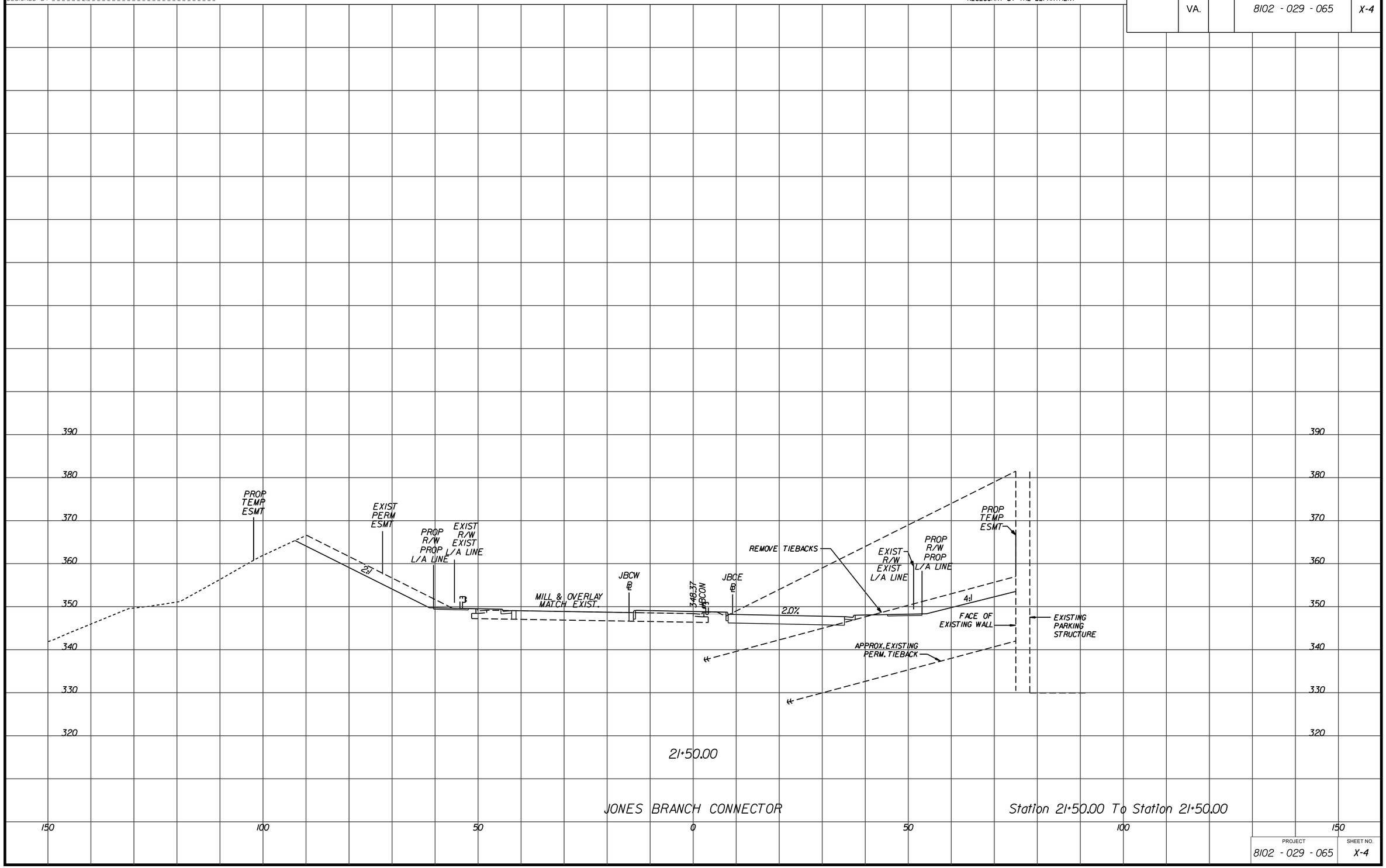

PROJECT	SHEET NO.
8102 - 029 - 065	X-4

1/17/2013

d0707tlay_1bc.dgn
$DGNLEV

PROJECT MANAGER Sung S. Shin, PE (703) 877-5753 (RKK)
SURVEYED BY
DESIGN SUPERVISED BY John M. McDowell, PE (703) 246-0028 (RKK)
DESIGNED BY Rummel, Klepper & Kahl, LLP (703) 246-0028

CROSS SECTIONS

SCALE 1 IN. = 10 FT

DESIGN FEATURES RELATING TO CONSTRUCTION OR TO REGULATION AND CONTROL OF TRAFFIC MAY BE SUBJECT TO CHANGE AS DEEMED NECESSARY BY THE DEPARTMENT

REVISED	STATE	STATE ROUTE	STATE PROJECT	SHEET NO.
	VA.		8102 - 029 - 065	X-5

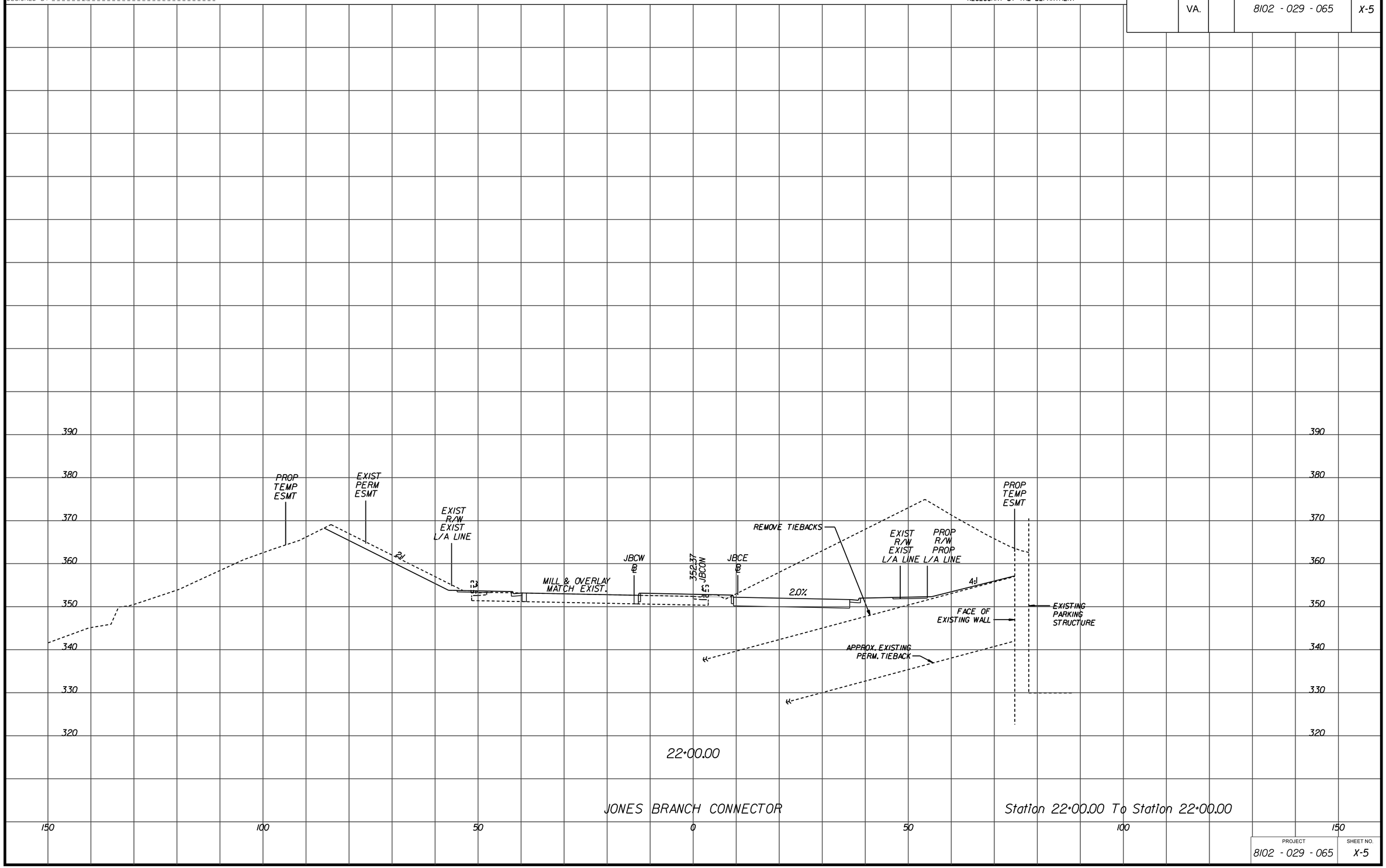

PROJECT	SHEET NO.
8102 - 029 - 065	X-5

1/17/2013

d0707tlay_1bc.dgn
$DGNLEV

PROJECT MANAGER Sung S. Shin, PE (703) 877-5753 (RKK)
SURVEYED BY
DESIGN SUPERVISED BY John M. McDowell, PE (703) 246-0028 (RKK)
DESIGNED BY Rummel, Klepper & Kahl, LLP (703) 246-0028

CROSS SECTIONS

SCALE 1 IN. = 10 FT

DESIGN FEATURES RELATING TO CONSTRUCTION OR TO REGULATION AND CONTROL OF TRAFFIC MAY BE SUBJECT TO CHANGE AS DEEMED NECESSARY BY THE DEPARTMENT

REVISED	STATE	STATE ROUTE	STATE PROJECT	SHEET NO.
	VA.		8102 - 029 - 065	X-6

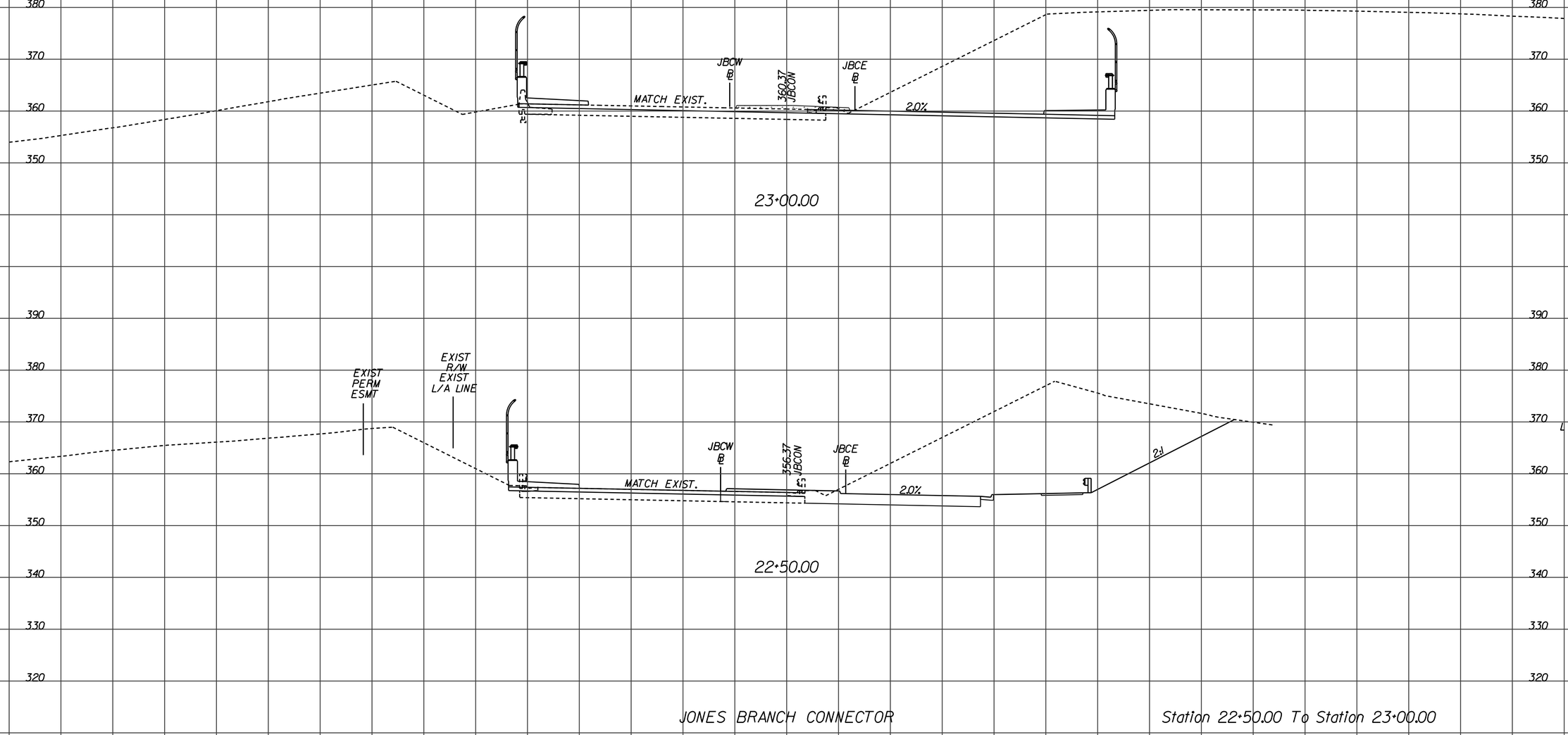

JONES BRANCH CONNECTOR

Station 22+50.00 To Station 23+00.00

PROJECT	SHEET NO.
8102 - 029 - 065	X-6

1/17/2013

d0707tlay_jbc.dgn
$DGNLEV

PROJECT MANAGER Sung S. Shin, PE (703) 877-5753 (RKK)
SURVEYED BY
DESIGN SUPERVISED BY John M. McDowell, PE (703) 246-0028 (RKK)
DESIGNED BY Rummel, Klepper & Kahl, LLP (703) 246-0028

CROSS SECTIONS

SCALE 1 IN. = 10 FT

DESIGN FEATURES RELATING TO CONSTRUCTION OR TO REGULATION AND CONTROL OF TRAFFIC MAY BE SUBJECT TO CHANGE AS DEEMED NECESSARY BY THE DEPARTMENT

REVISED	STATE	STATE ROUTE	STATE PROJECT	SHEET NO.
	VA.		8102 - 029 - 065	X-7

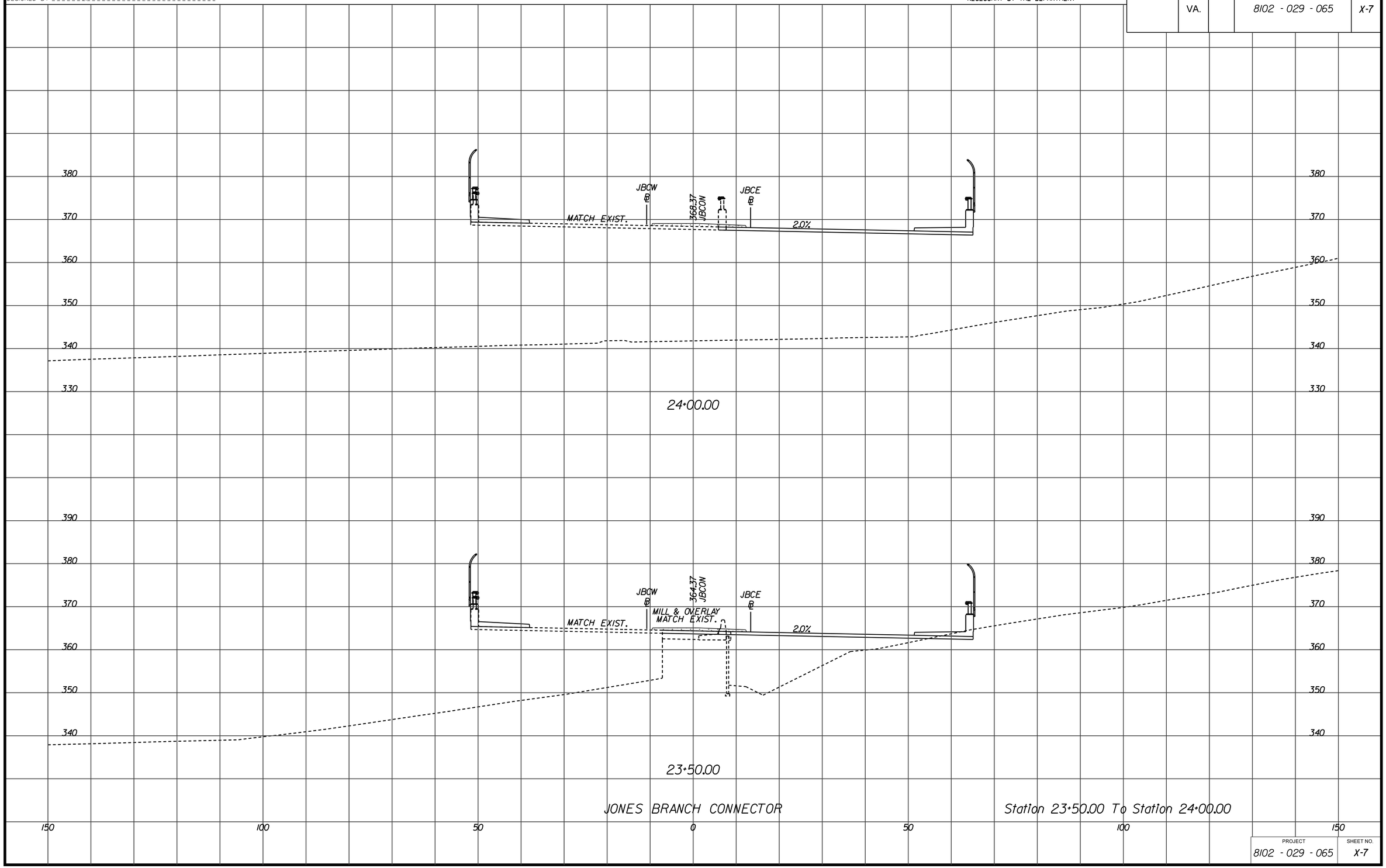

JONES BRANCH CONNECTOR

Station 23+50.00 To Station 24+00.00

PROJECT	SHEET NO.
8102 - 029 - 065	X-7

1/17/2013

d0707tlay_jbc.dgn
$DGNLEV

PROJECT MANAGER Sung S. Shin, PE (703) 877-5753 (RKK)
SURVEYED BY
DESIGN SUPERVISED BY John M. McDowell, PE (703) 246-0028 (RKK)
DESIGNED BY Rummel, Klepper & Kahl, LLP (703) 246-0028

CROSS SECTIONS

SCALE 1 IN. = 10 FT

DESIGN FEATURES RELATING TO CONSTRUCTION OR TO REGULATION AND CONTROL OF TRAFFIC MAY BE SUBJECT TO CHANGE AS DEEMED NECESSARY BY THE DEPARTMENT

REVISED	STATE	STATE ROUTE	STATE PROJECT	SHEET NO.
	VA.		8102 - 029 - 065	X-8

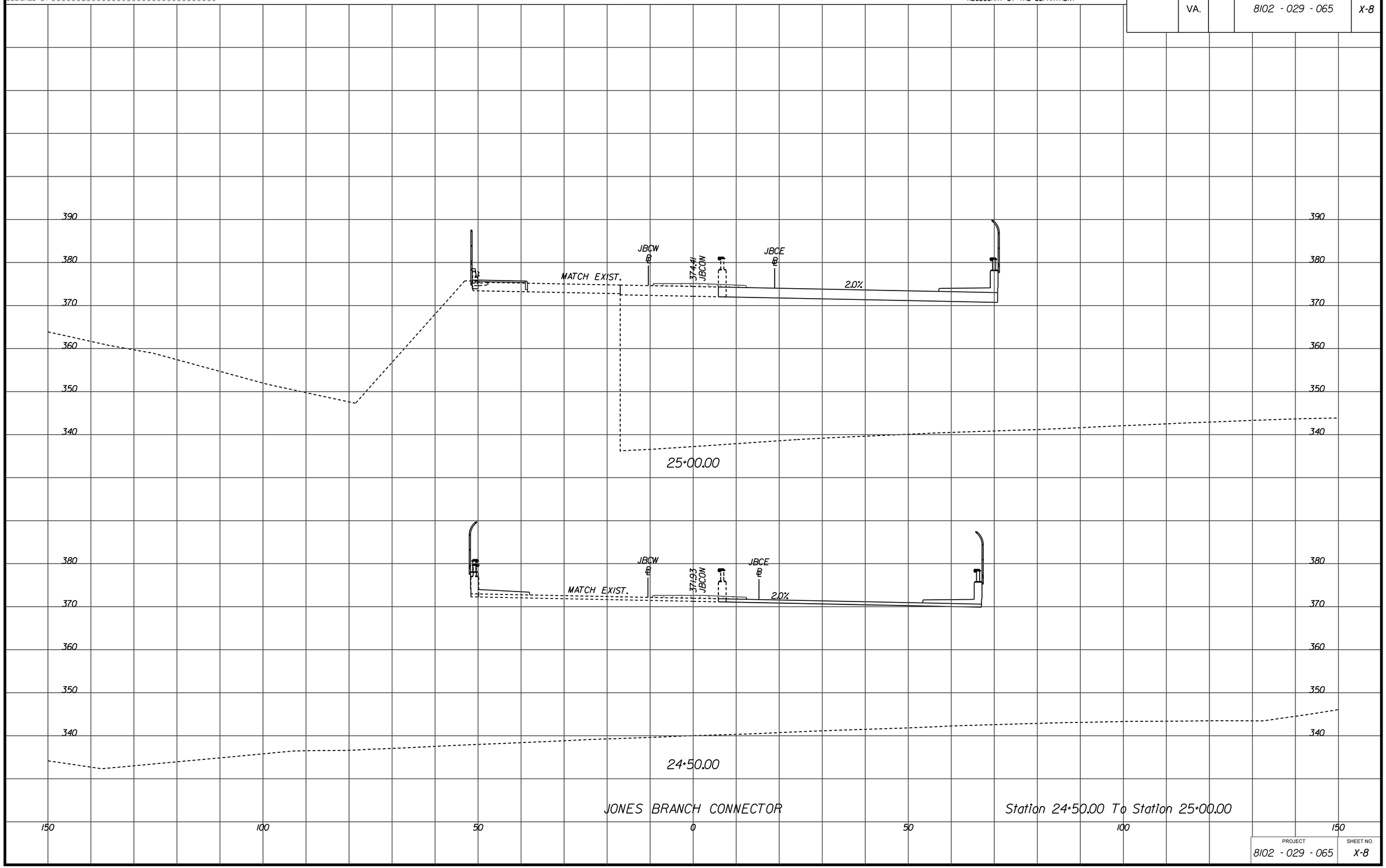

JONES BRANCH CONNECTOR

Station 24+50.00 To Station 25+00.00

PROJECT	SHEET NO.
8102 - 029 - 065	X-8

1/17/2013

d0707tlay_1bc.dgn
$DGNLEV

PROJECT MANAGER Sung S.Shin, PE (703) 877-5753 (RKK)
SURVEYED BY
DESIGN SUPERVISED BY John M. McDowell, PE (703) 246-0028 (RKK)
DESIGNED BY Rummel, Klepper & Kahl, LLP (703) 246-0028

CROSS SECTIONS

SCALE 1 IN. = 10 FT

DESIGN FEATURES RELATING TO CONSTRUCTION OR TO REGULATION AND CONTROL OF TRAFFIC MAY BE SUBJECT TO CHANGE AS DEEMED NECESSARY BY THE DEPARTMENT

REVISED	STATE	STATE ROUTE	STATE PROJECT	SHEET NO.
	VA.		8102 - 029 - 065	X-9

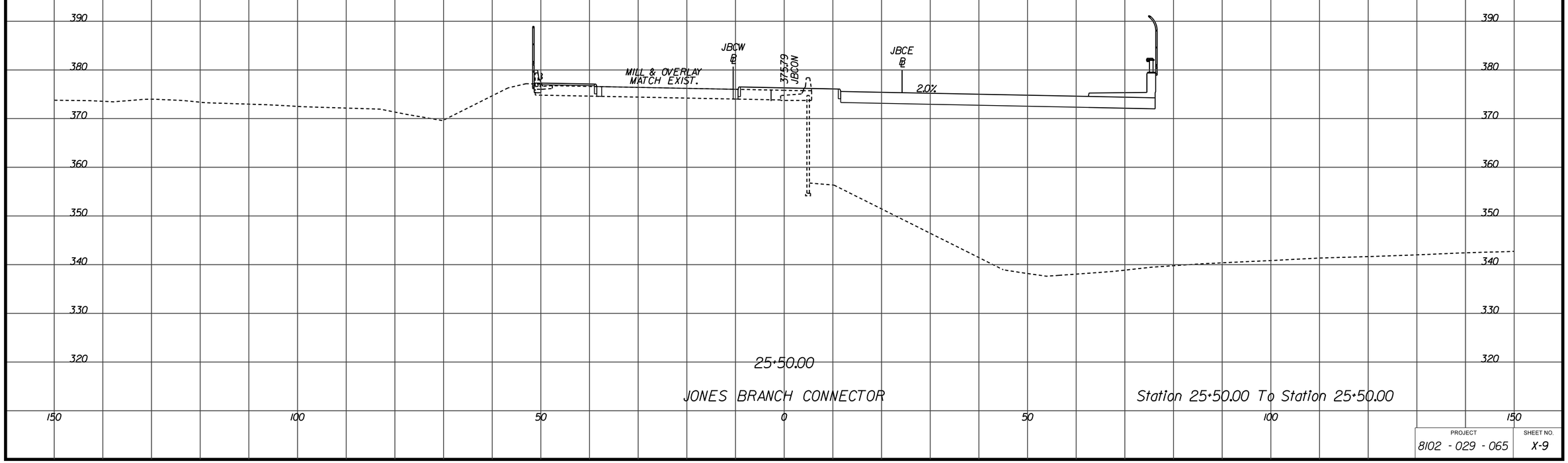

PROJECT	SHEET NO.
8102 - 029 - 065	X-9

1/17/2013

d0707tlay_1bc.dgn
$DGNLEV

PROJECT MANAGER Sung S. Shin, PE (703) 877-5753 (RKK)
SURVEYED BY
DESIGN SUPERVISED BY John M. McDowell, PE (703) 246-0028 (RKK)
DESIGNED BY Rummel, Klepper & Kahl, LLP (703) 246-0028

CROSS SECTIONS

SCALE 1 IN. = 10 FT

DESIGN FEATURES RELATING TO CONSTRUCTION OR TO REGULATION AND CONTROL OF TRAFFIC MAY BE SUBJECT TO CHANGE AS DEEMED NECESSARY BY THE DEPARTMENT

REVISED	STATE	STATE ROUTE	STATE PROJECT	SHEET NO.
	VA.		8102 - 029 - 065	X-10

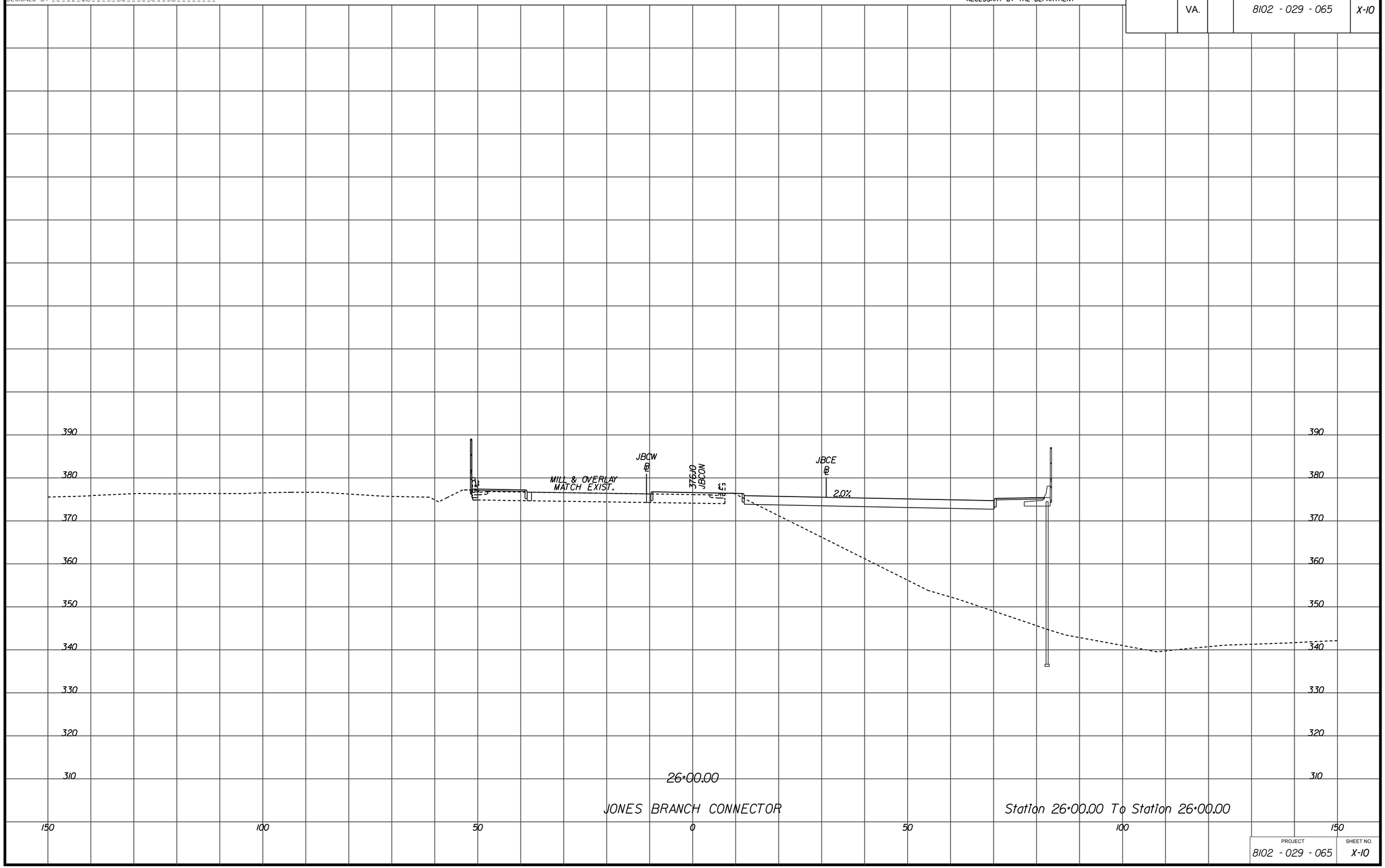

PROJECT	SHEET NO.
8102 - 029 - 065	X-10

1/17/2013

d0707tlay_1bc.dgn
$DGNLEV

PROJECT MANAGER Sung S. Shin, PE (703) 877-5753 (RKK)
SURVEYED BY
DESIGN SUPERVISED BY John M. McDowell, PE (703) 246-0028 (RKK)
DESIGNED BY Rummel, Klepper & Kahl, LLP (703) 246-0028

CROSS SECTIONS

SCALE 1 IN. = 10 FT

DESIGN FEATURES RELATING TO CONSTRUCTION OR TO REGULATION AND CONTROL OF TRAFFIC MAY BE SUBJECT TO CHANGE AS DEEMED NECESSARY BY THE DEPARTMENT

REVISED	STATE	STATE ROUTE	STATE PROJECT	SHEET NO.
	VA.		8102 - 029 - 065	X-11

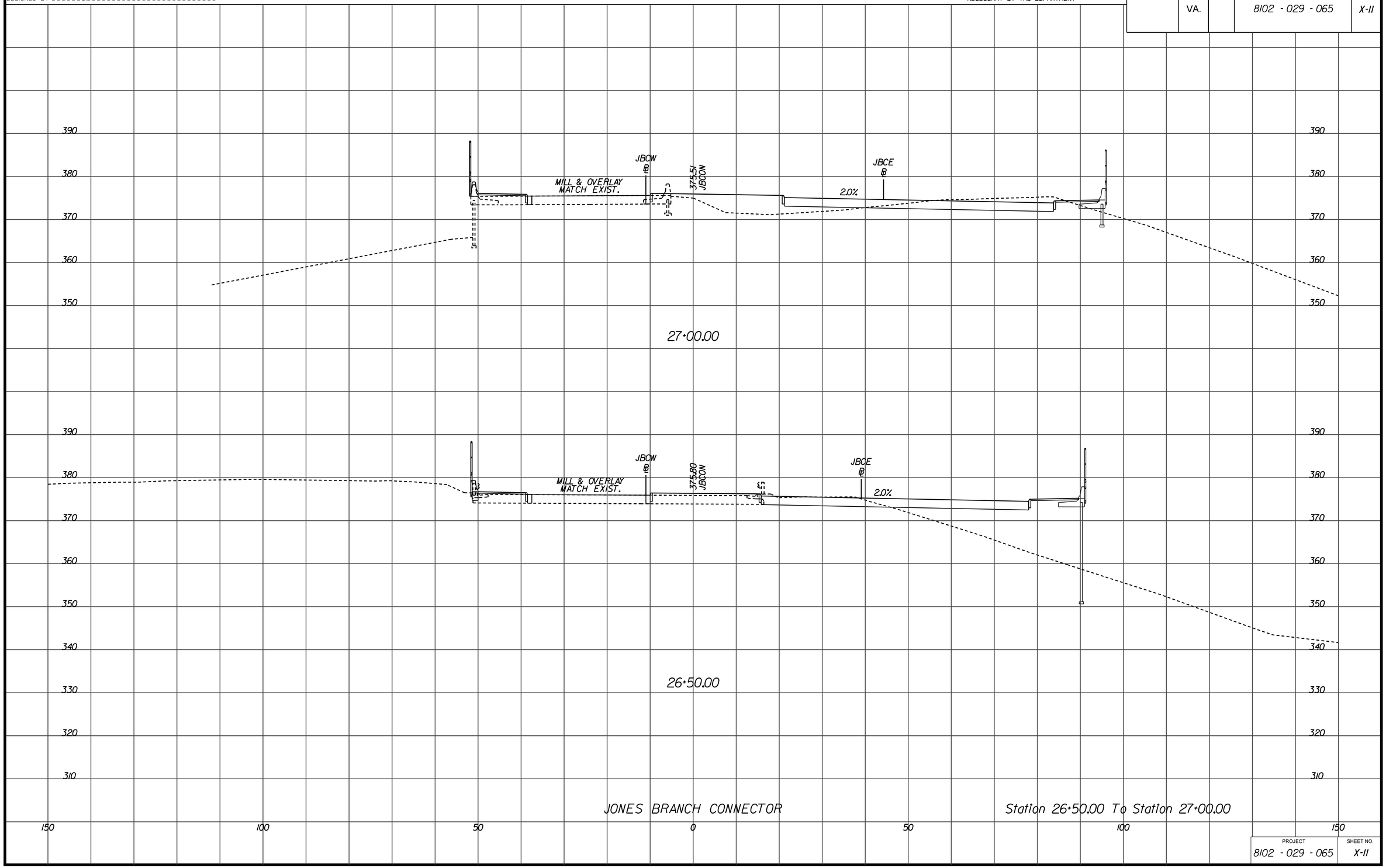

PROJECT	SHEET NO.
8102 - 029 - 065	X-11

1/17/2013

d0707tlay_jbc.dgn
$DGNLEV

PROJECT MANAGER Sung S. Shin, PE (703) 877-5753 (RKK)
SURVEYED BY
DESIGN SUPERVISED BY John M. McDowell, PE (703) 246-0028 (RKK)
DESIGNED BY Rummel, Klepper & Kahl, LLP (703) 246-0028

CROSS SECTIONS

SCALE 1 IN. = 10 FT

DESIGN FEATURES RELATING TO CONSTRUCTION OR TO REGULATION AND CONTROL OF TRAFFIC MAY BE SUBJECT TO CHANGE AS DEEMED NECESSARY BY THE DEPARTMENT

REVISED	STATE	STATE ROUTE	STATE PROJECT	SHEET NO.
	VA.		8102 - 029 - 065	X-12

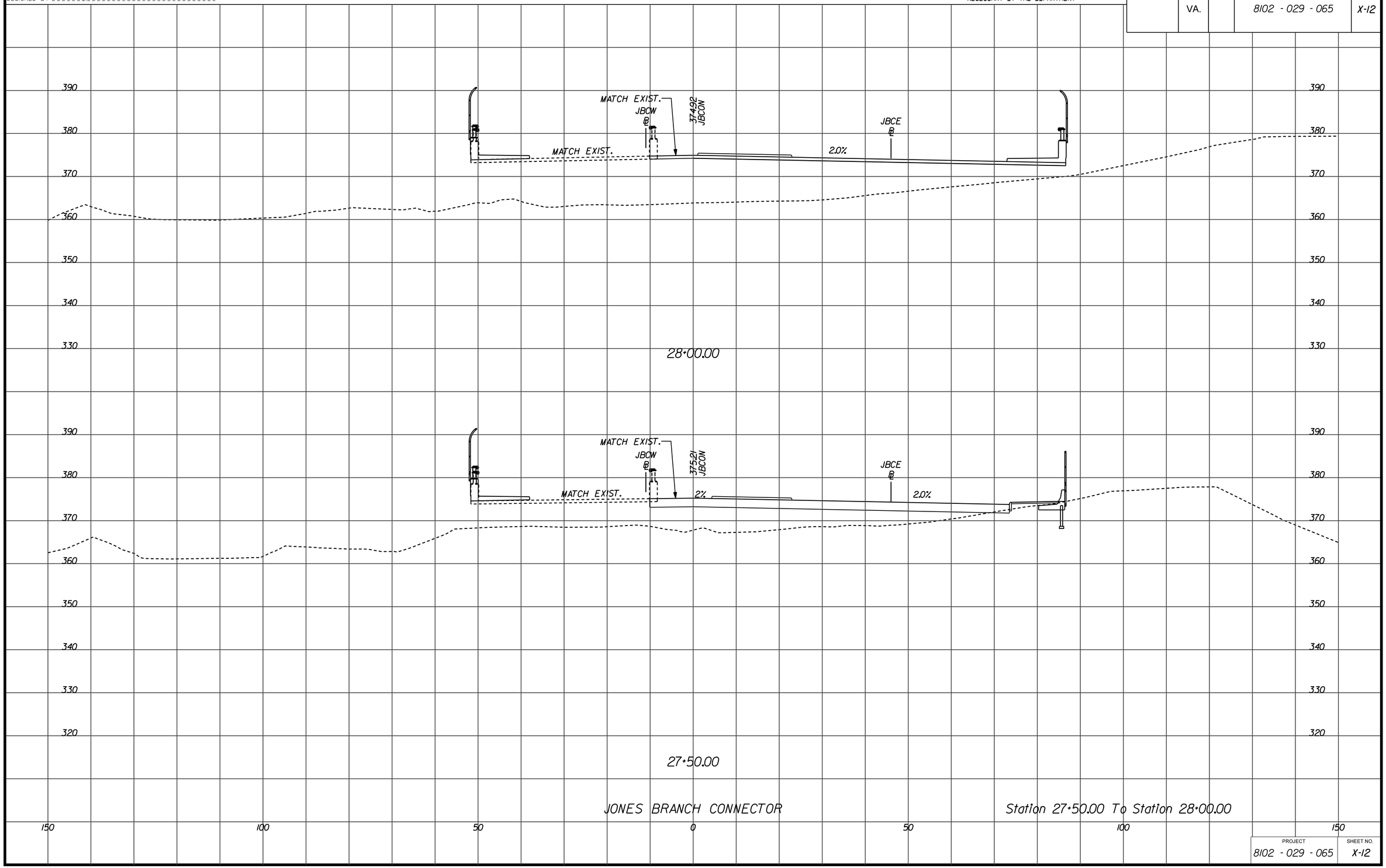

PROJECT	SHEET NO.
8102 - 029 - 065	X-12

1/17/2013

d0707tlay_jbc.dgn
$DGNLEV

PROJECT MANAGER Sung S. Shin, PE (703) 877-5753 (RKK)
SURVEYED BY
DESIGN SUPERVISED BY John M. McDowell, PE (703) 246-0028 (RKK)
DESIGNED BY Rummel, Klepper & Kahl, LLP (703) 246-0028

CROSS SECTIONS

SCALE 1 IN. = 10 FT

DESIGN FEATURES RELATING TO CONSTRUCTION OR TO REGULATION AND CONTROL OF TRAFFIC MAY BE SUBJECT TO CHANGE AS DEEMED NECESSARY BY THE DEPARTMENT

REVISED	STATE	STATE ROUTE	STATE PROJECT	SHEET NO.
	VA.		8102 - 029 - 065	X-13

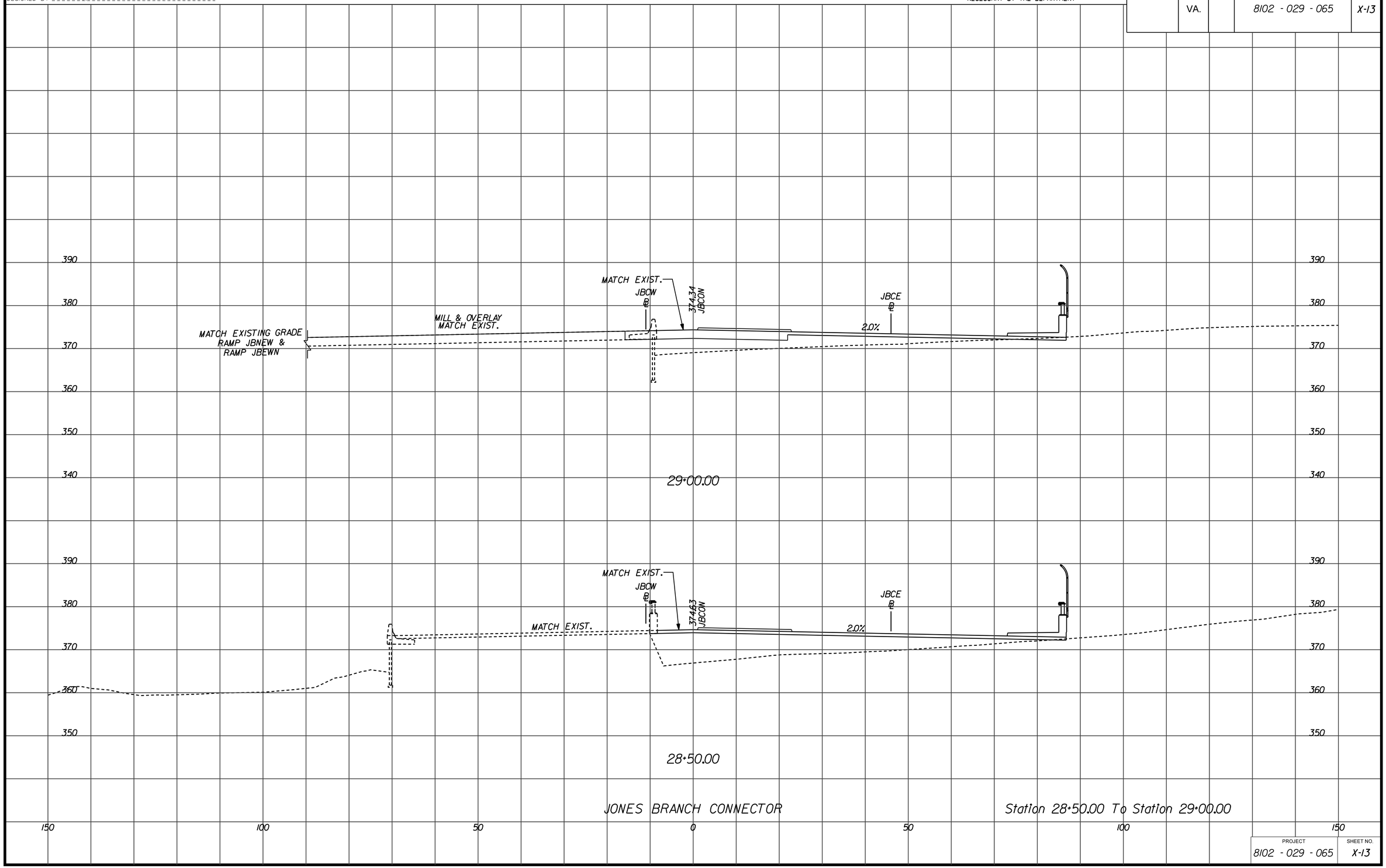

PROJECT	SHEET NO.
8102 - 029 - 065	X-13

1/17/2013

d0707tlay_jbc.dgn
$DGNLEV

PROJECT MANAGER Sung S. Shin, PE (703) 877-5753 (RKK)
SURVEYED BY
DESIGN SUPERVISED BY John M. McDowell, PE (703) 246-0028 (RKK)
DESIGNED BY Rummel, Klepper & Kahl, LLP (703) 246-0028

CROSS SECTIONS

SCALE 1 IN. = 10 FT

DESIGN FEATURES RELATING TO CONSTRUCTION OR TO REGULATION AND CONTROL OF TRAFFIC MAY BE SUBJECT TO CHANGE AS DEEMED NECESSARY BY THE DEPARTMENT

REVISED	STATE	STATE ROUTE	STATE PROJECT	SHEET NO.
	VA.		8102 - 029 - 065	X-14

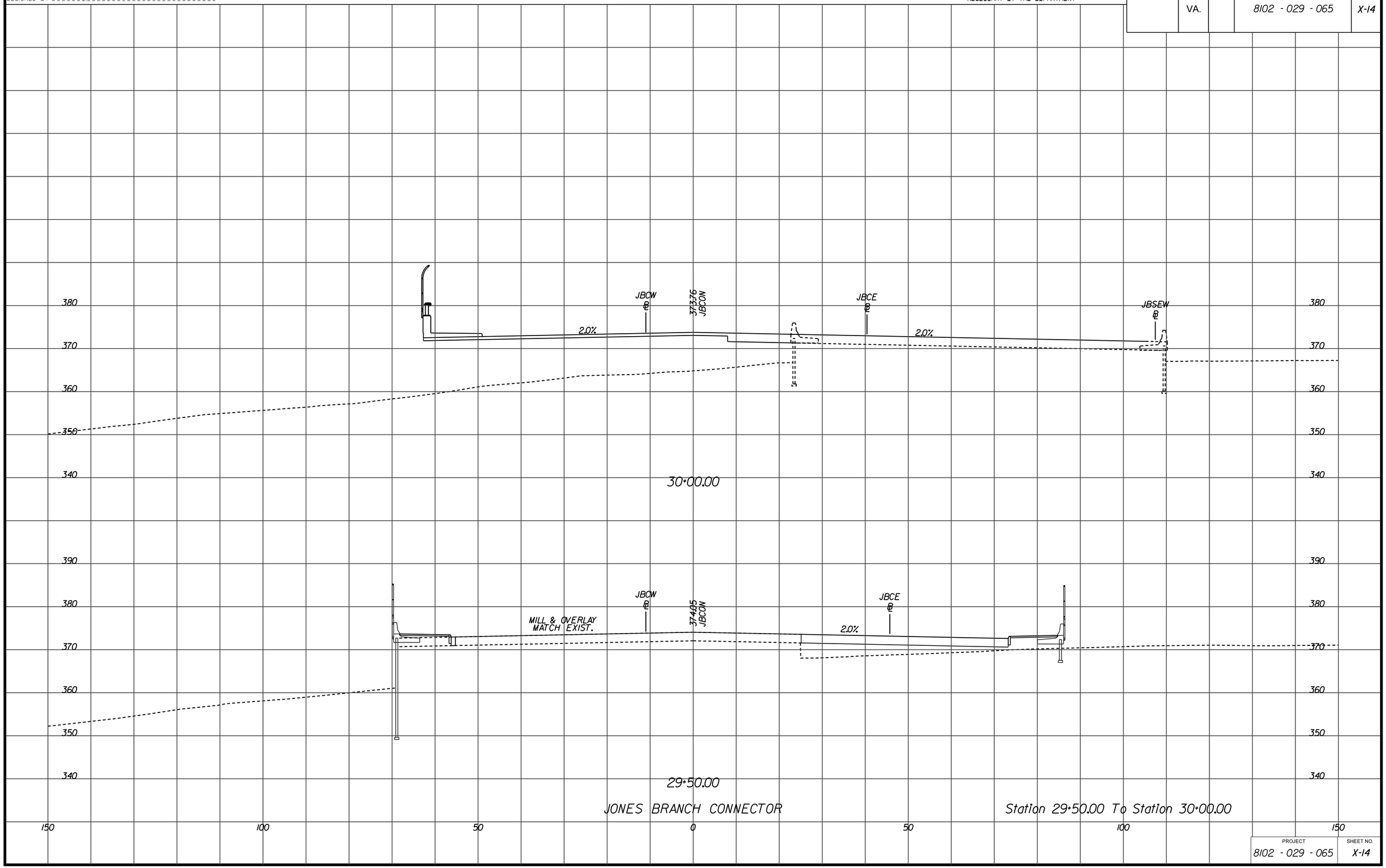

PROJECT	SHEET NO.
8102 - 029 - 065	X-14

1/17/2013

d0707tlay_1bc.dgn
$DGNLEV

PROJECT MANAGER Sung S. Shin, PE (703) 877-5753 (RKK)
SURVEYED BY
DESIGN SUPERVISED BY John M. McDowell, PE (703) 246-0028 (RKK)
DESIGNED BY Rummel, Klepper & Kahl, LLP (703) 246-0028

CROSS SECTIONS

SCALE 1 IN. = 10 FT

DESIGN FEATURES RELATING TO CONSTRUCTION OR TO REGULATION AND CONTROL OF TRAFFIC MAY BE SUBJECT TO CHANGE AS DEEMED NECESSARY BY THE DEPARTMENT

REVISED	STATE	STATE ROUTE	STATE PROJECT	SHEET NO.
	VA.		8102 - 029 - 065	X-15

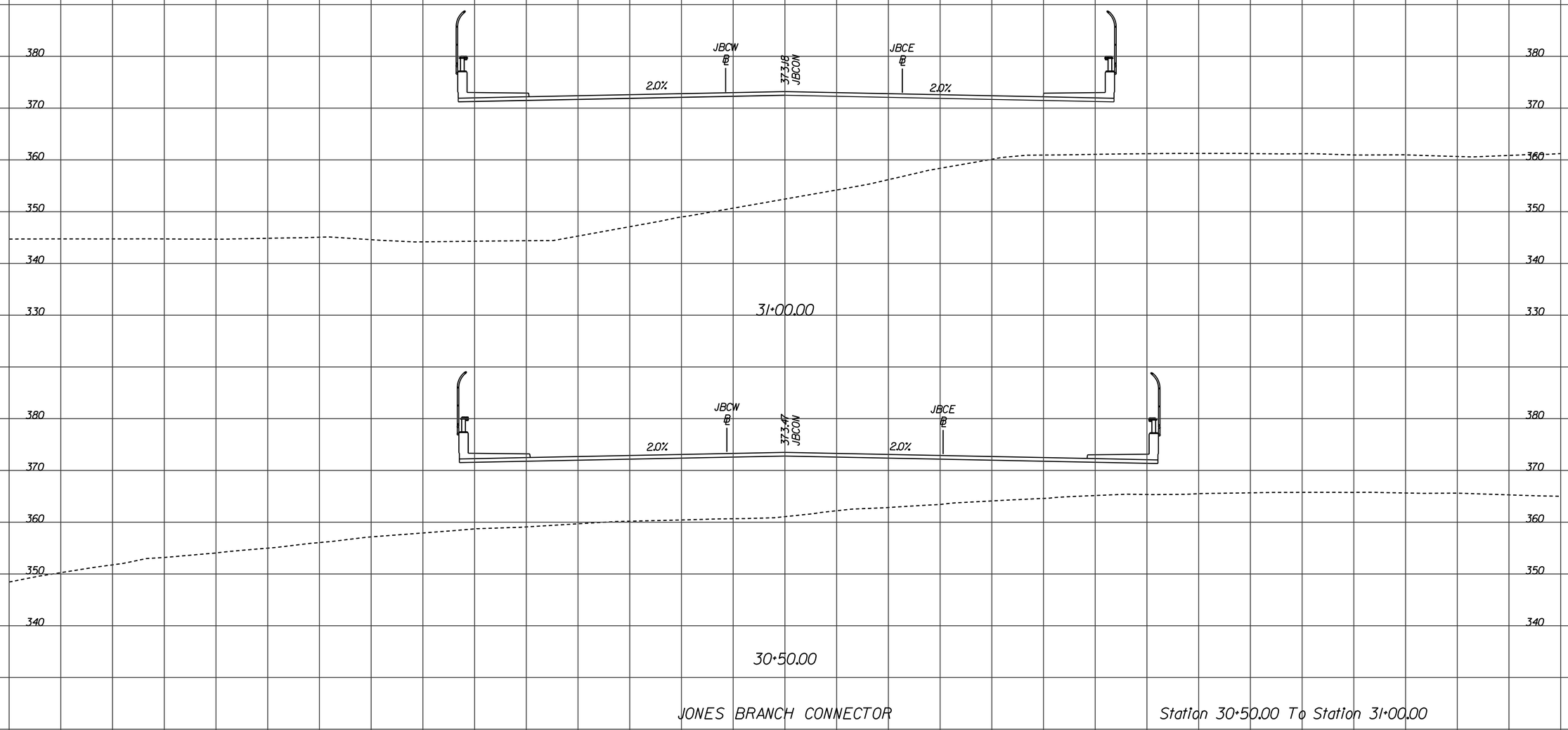

JONES BRANCH CONNECTOR

Station 30+50.00 To Station 31+00.00

PROJECT	SHEET NO.
8102 - 029 - 065	X-15

1/17/2013

d0707tlay_jbc.dgn
$DGNLEV

PROJECT MANAGER Sung S. Shin, PE (703) 877-5753 (RKK)
SURVEYED BY
DESIGN SUPERVISED BY John M. McDowell, PE (703) 246-0028 (RKK)
DESIGNED BY Rummel, Klepper & Kahl, LLP (703) 246-0028

CROSS SECTIONS

SCALE 1 IN. = 10 FT

DESIGN FEATURES RELATING TO CONSTRUCTION OR TO REGULATION AND CONTROL OF TRAFFIC MAY BE SUBJECT TO CHANGE AS DEEMED NECESSARY BY THE DEPARTMENT

REVISED	STATE	STATE ROUTE	STATE PROJECT	SHEET NO.
	VA.		8102 - 029 - 065	X-16

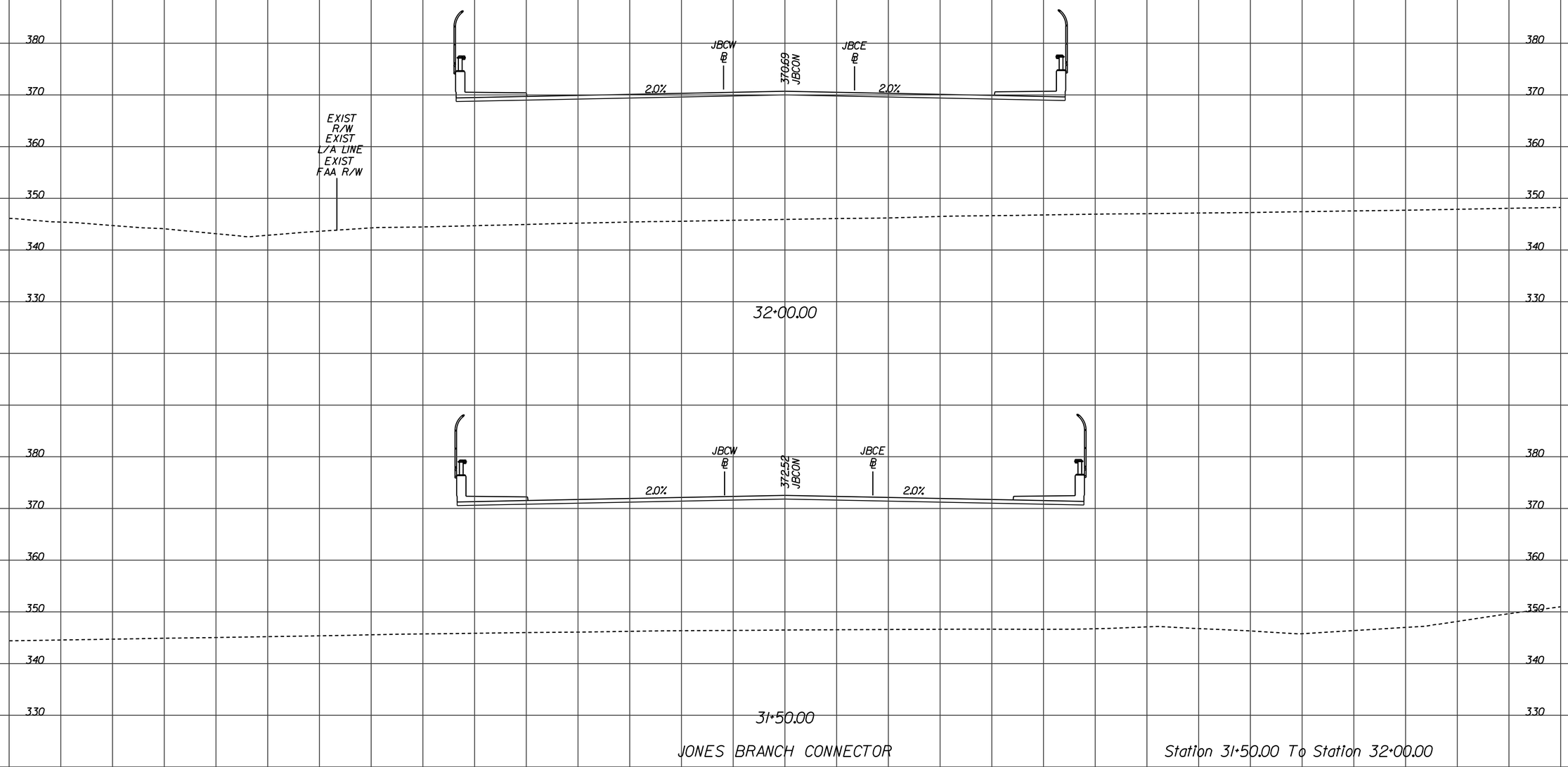

JONES BRANCH CONNECTOR

Station 31+50.00 To Station 32+00.00

PROJECT	SHEET NO.
8102 - 029 - 065	X-16

1/17/2013

d07071lay_1bc.dgn
$DGNLEV

PROJECT MANAGER Sung S. Shin, PE (703) 877-5753 (RKK)
SURVEYED BY
DESIGN SUPERVISED BY John M. McDowell, PE (703) 246-0028 (RKK)
DESIGNED BY Rummel, Klepper & Kahl, LLP (703) 246-0028

CROSS SECTIONS

SCALE 1 IN. = 10 FT

DESIGN FEATURES RELATING TO CONSTRUCTION OR TO REGULATION AND CONTROL OF TRAFFIC MAY BE SUBJECT TO CHANGE AS DEEMED NECESSARY BY THE DEPARTMENT

REVISED	STATE	STATE ROUTE	STATE PROJECT	SHEET NO.
	VA.		8102 - 029 - 065	X-17

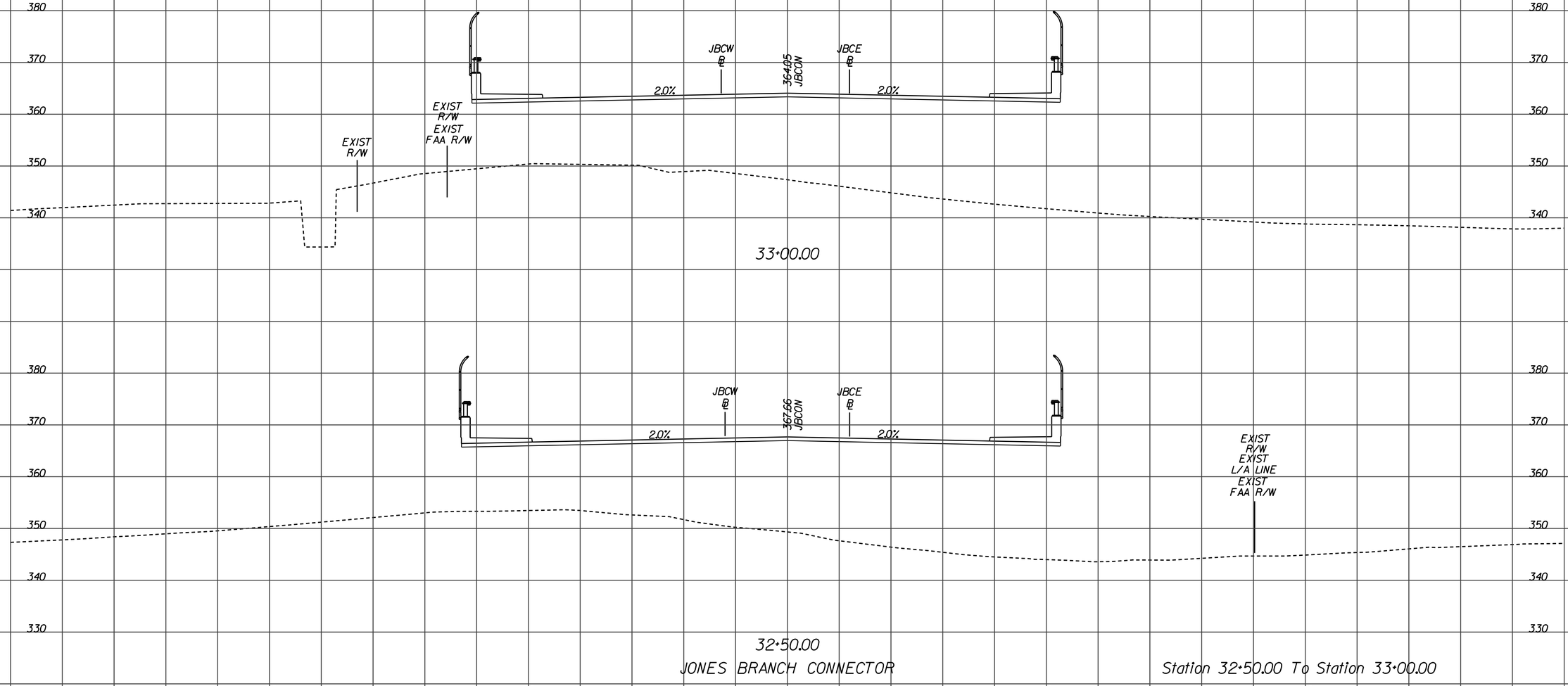

PROJECT	SHEET NO.
8102 - 029 - 065	X-17

1/17/2013

d0707tlay_jbc.dgn
$DGNLEV

PROJECT MANAGER Sung S. Shin, PE (703) 877-5753 (RKK)
SURVEYED BY
DESIGN SUPERVISED BY John M. McDowell, PE (703) 246-0028 (RKK)
DESIGNED BY Rummel, Klepper & Kahl, LLP (703) 246-0028

CROSS SECTIONS

SCALE 1 IN. = 10 FT

DESIGN FEATURES RELATING TO CONSTRUCTION OR TO REGULATION AND CONTROL OF TRAFFIC MAY BE SUBJECT TO CHANGE AS DEEMED NECESSARY BY THE DEPARTMENT

REVISED	STATE	STATE ROUTE	STATE PROJECT	SHEET NO.
	VA.		8102 - 029 - 065	X-18

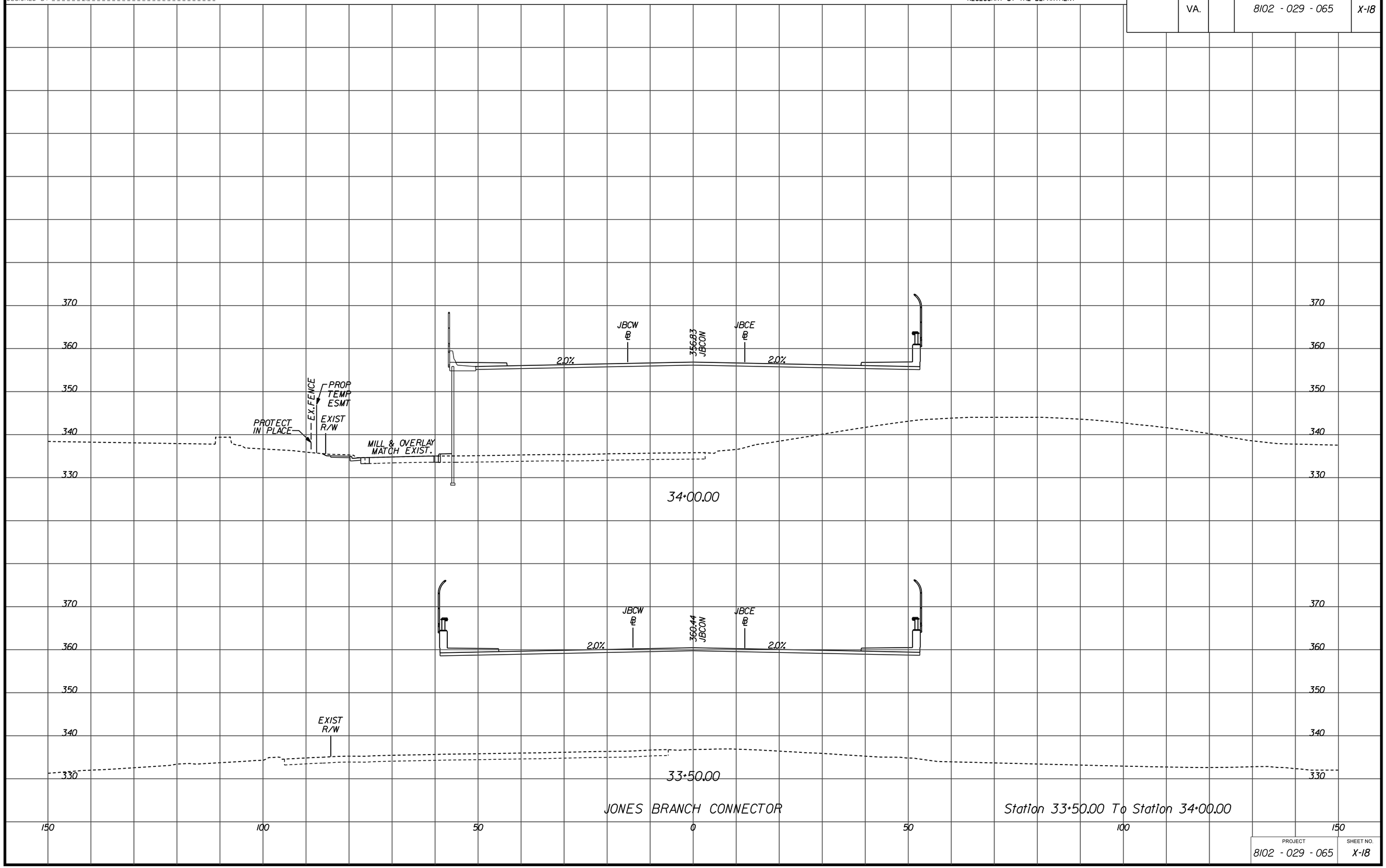

PROJECT	SHEET NO.
8102 - 029 - 065	X-18

1/17/2013

d0707tlay_1bc.dgn
$DGNLEV

PROJECT MANAGER Sung S. Shin, PE (703) 877-5753 (RKK)
SURVEYED BY
DESIGN SUPERVISED BY John M. McDowell, PE (703) 246-0028 (RKK)
DESIGNED BY Rummel, Klepper & Kahl, LLP (703) 246-0028

CROSS SECTIONS

SCALE 1 IN. = 10 FT

DESIGN FEATURES RELATING TO CONSTRUCTION OR TO REGULATION AND CONTROL OF TRAFFIC MAY BE SUBJECT TO CHANGE AS DEEMED NECESSARY BY THE DEPARTMENT

REVISED	STATE	STATE ROUTE	STATE PROJECT	SHEET NO.
	VA.		8102 - 029 - 065	X-19

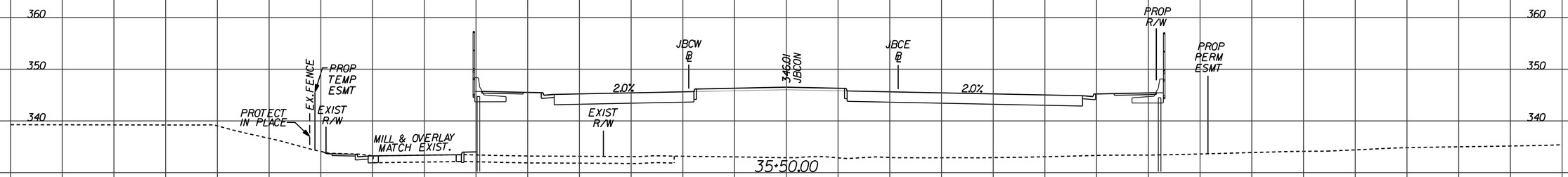

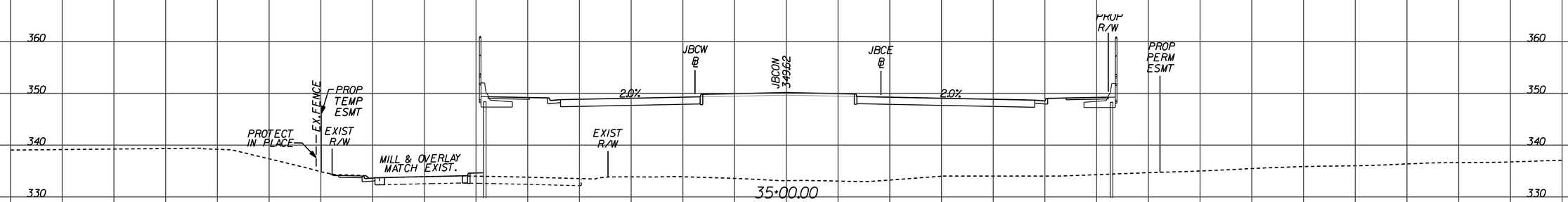

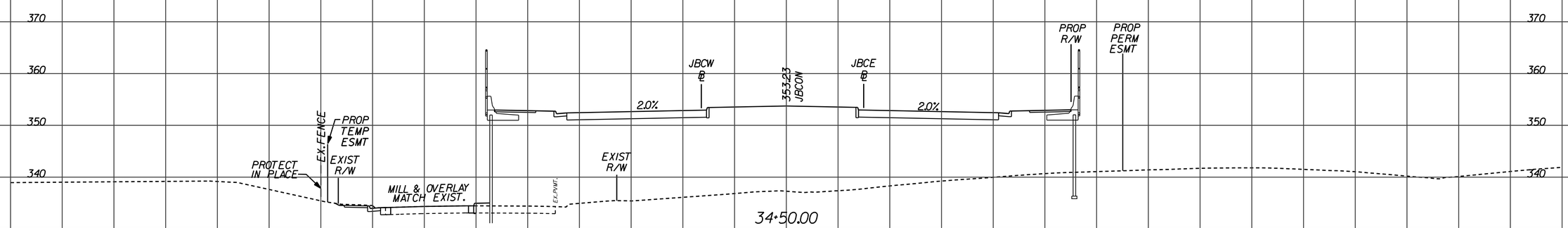

JONES BRANCH CONNECTOR

Station 34+50.00 To Station 35+50.00

150 100 50 0 50 100 150

PROJECT	SHEET NO.
8102 - 029 - 065	X-19

1/17/2013

d0707tlay_jbc.dgn
$DGNLEV

PROJECT MANAGER Sung S. Shin, PE (703) 877-5753 (RKK)
SURVEYED BY
DESIGN SUPERVISED BY John M. McDowell, PE (703) 246-0028 (RKK)
DESIGNED BY Rummel, Klepper & Kahl, LLP (703) 246-0028

CROSS SECTIONS

SCALE 1 IN. = 10 FT

DESIGN FEATURES RELATING TO CONSTRUCTION OR TO REGULATION AND CONTROL OF TRAFFIC MAY BE SUBJECT TO CHANGE AS DEEMED NECESSARY BY THE DEPARTMENT

REVISED	STATE	STATE ROUTE	STATE PROJECT	SHEET NO.
	VA.		8102 - 029 - 065	X-20

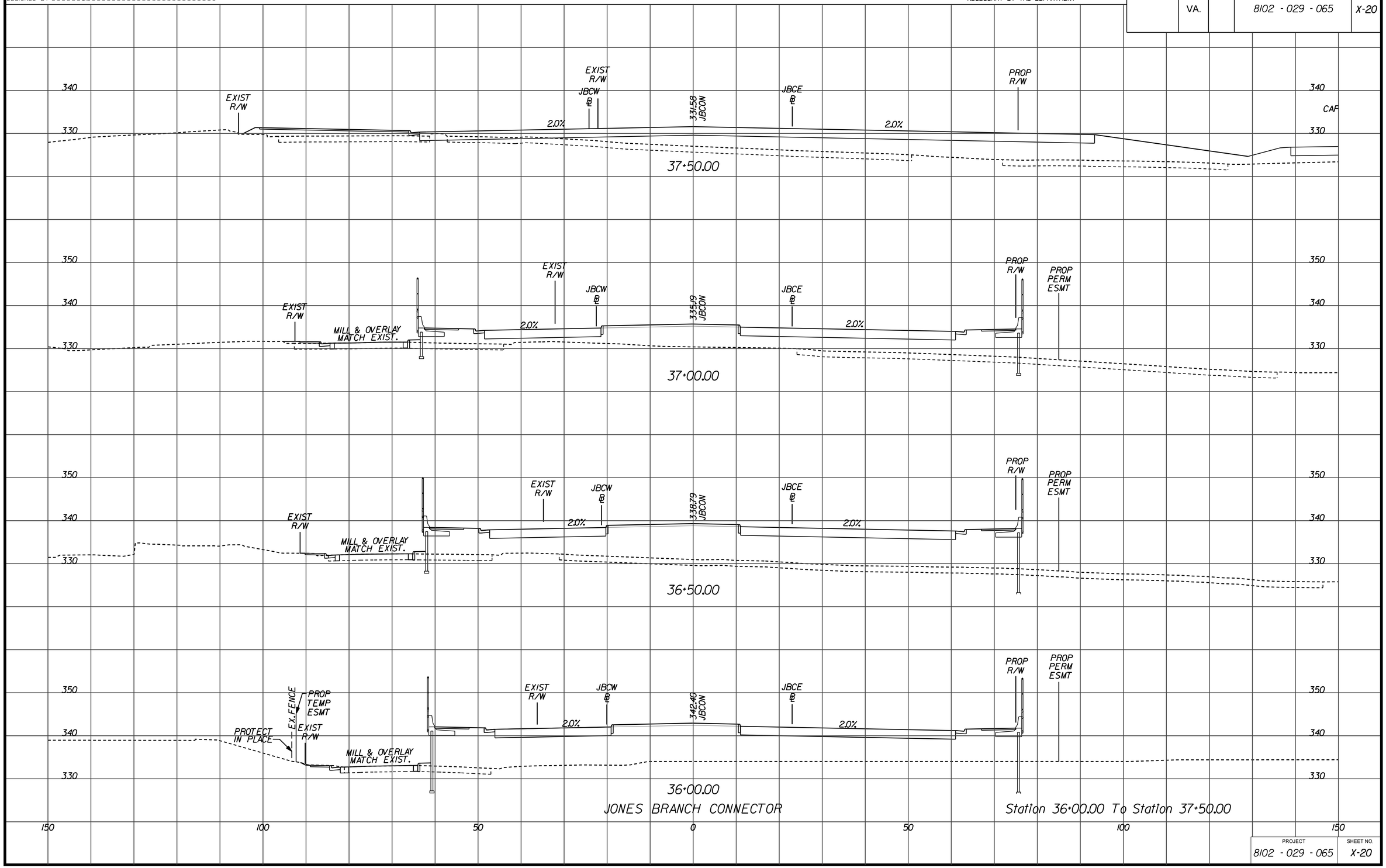

JONES BRANCH CONNECTOR

Station 36+00.00 To Station 37+50.00

PROJECT	SHEET NO.
8102 - 029 - 065	X-20

1/17/2013

d0707tlay_1bc.dgn
$DGNLEV

PROJECT MANAGER Sung S. Shin, PE (703) 877-5753 (RKK)
SURVEYED BY
DESIGN SUPERVISED BY John M. McDowell, PE (703) 246-0028 (RKK)
DESIGNED BY Rummel, Klepper & Kahl, LLP (703) 246-0028

CROSS SECTIONS

SCALE 1 IN. = 10 FT

DESIGN FEATURES RELATING TO CONSTRUCTION OR TO REGULATION AND CONTROL OF TRAFFIC MAY BE SUBJECT TO CHANGE AS DEEMED NECESSARY BY THE DEPARTMENT

REVISED	STATE	STATE ROUTE	STATE PROJECT	SHEET NO.
	VA.		8102 - 029 - 065	X-21

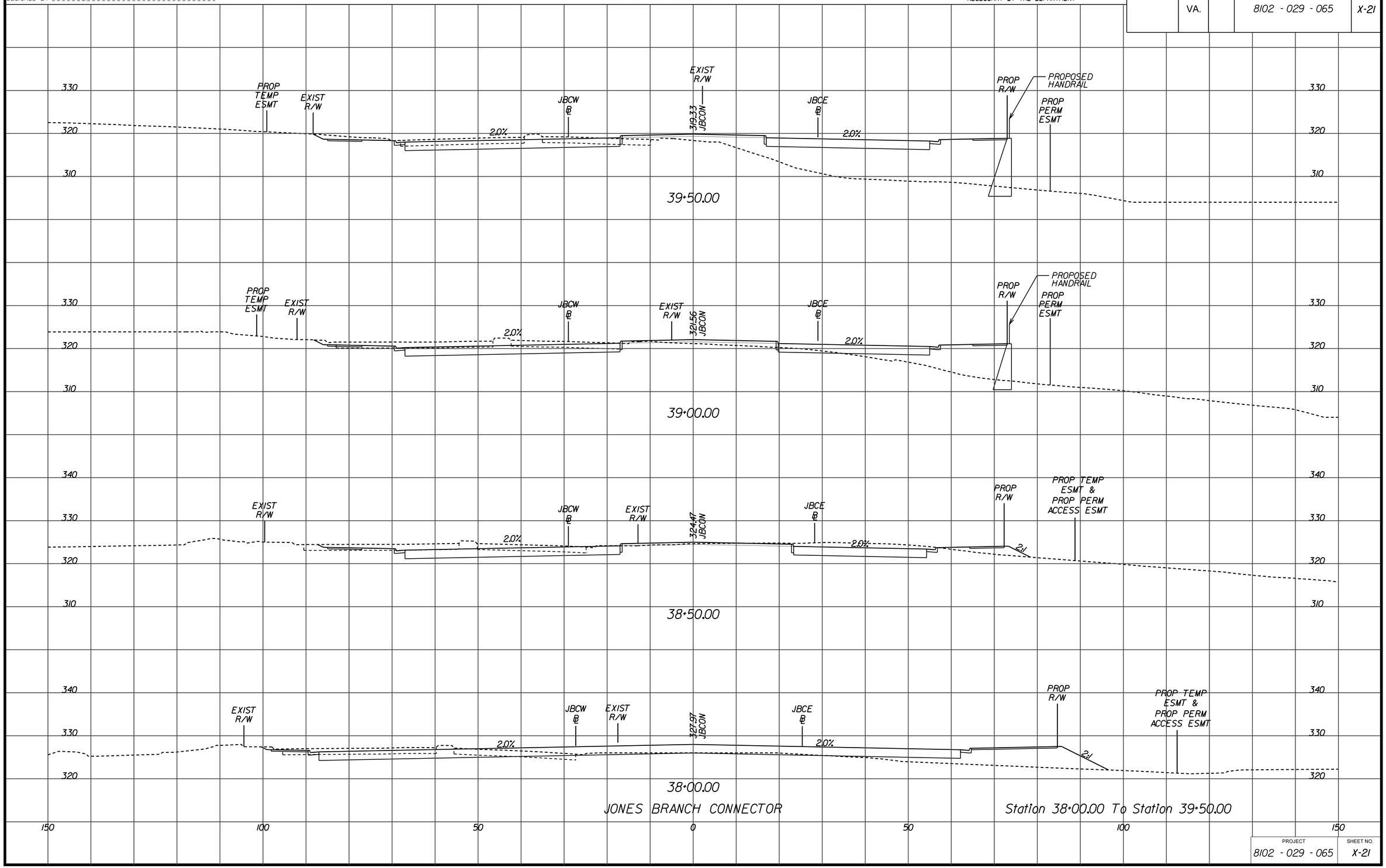

JONES BRANCH CONNECTOR

Station 38+00.00 To Station 39+50.00

PROJECT	SHEET NO.
8102 - 029 - 065	X-21

1/17/2013

d0707tlay_1bc.dgn
$DGNLEV

PROJECT MANAGER Sung S. Shin, PE (703) 877-5753 (RKK)
SURVEYED BY
DESIGN SUPERVISED BY John M. McDowell, PE (703) 246-0028 (RKK)
DESIGNED BY Rummel, Klepper & Kahl, LLP (703) 246-0028

CROSS SECTIONS

SCALE 1 IN. = 10 FT

DESIGN FEATURES RELATING TO CONSTRUCTION OR TO REGULATION AND CONTROL OF TRAFFIC MAY BE SUBJECT TO CHANGE AS DEEMED NECESSARY BY THE DEPARTMENT

REVISED	STATE	STATE ROUTE	STATE PROJECT	SHEET NO.
	VA.		8102 - 029 - 065	X-22

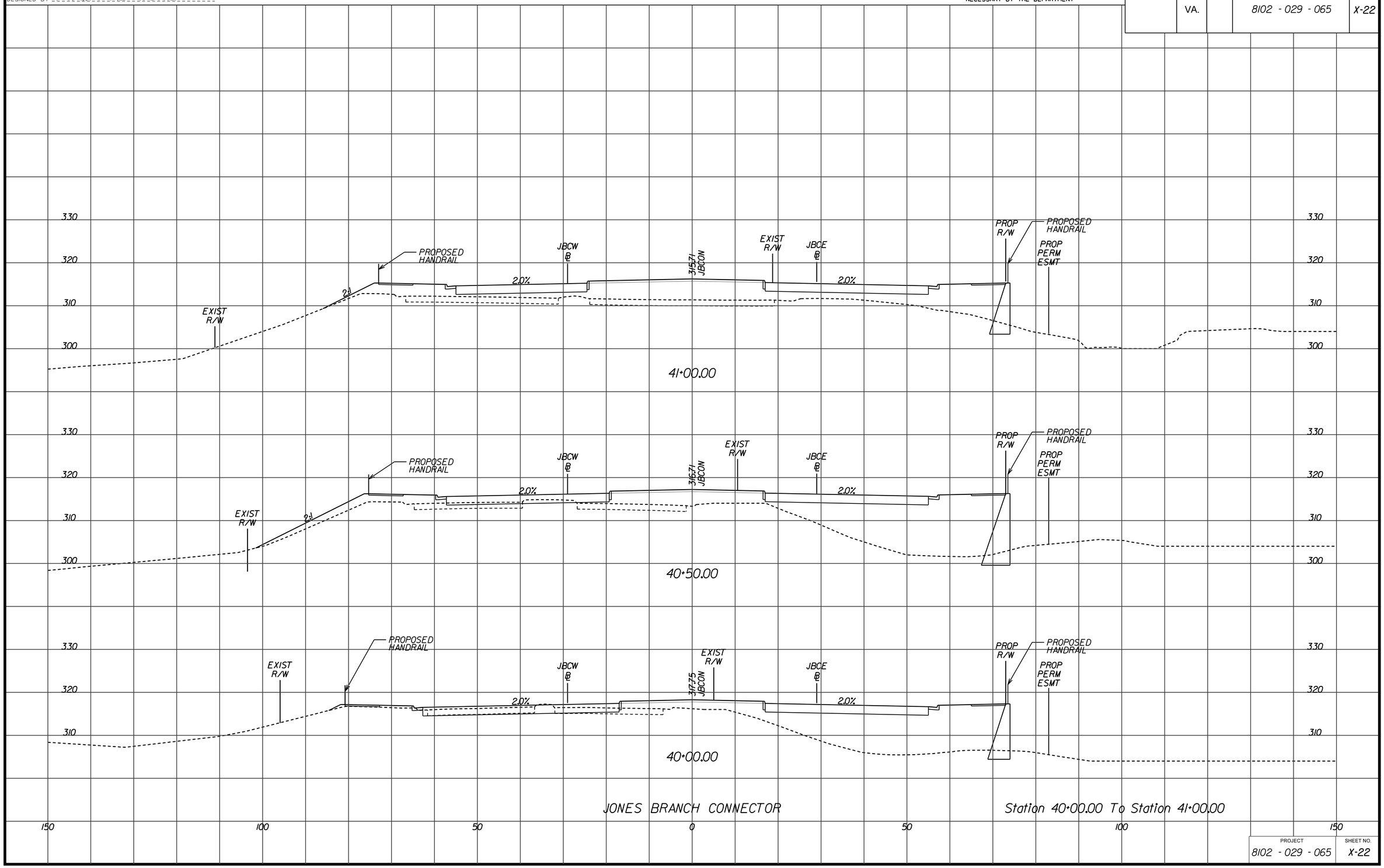

JONES BRANCH CONNECTOR

Station 40+00.00 To Station 41+00.00

PROJECT	SHEET NO.
8102 - 029 - 065	X-22

1/17/2013

d0707tlay_1bc.dgn
$DGNLEV

PROJECT MANAGER Sung S. Shin, PE (703) 877-5753 (RKK)
SURVEYED BY
DESIGN SUPERVISED BY John M. McDowell, PE (703) 246-0028 (RKK)
DESIGNED BY Rummel, Klepper & Kahl, LLP (703) 246-0028

CROSS SECTIONS

SCALE 1 IN. = 10 FT

DESIGN FEATURES RELATING TO CONSTRUCTION OR TO REGULATION AND CONTROL OF TRAFFIC MAY BE SUBJECT TO CHANGE AS DEEMED NECESSARY BY THE DEPARTMENT

REVISED	STATE	STATE ROUTE	STATE PROJECT	SHEET NO.
	VA.		8102 - 029 - 065	X-23

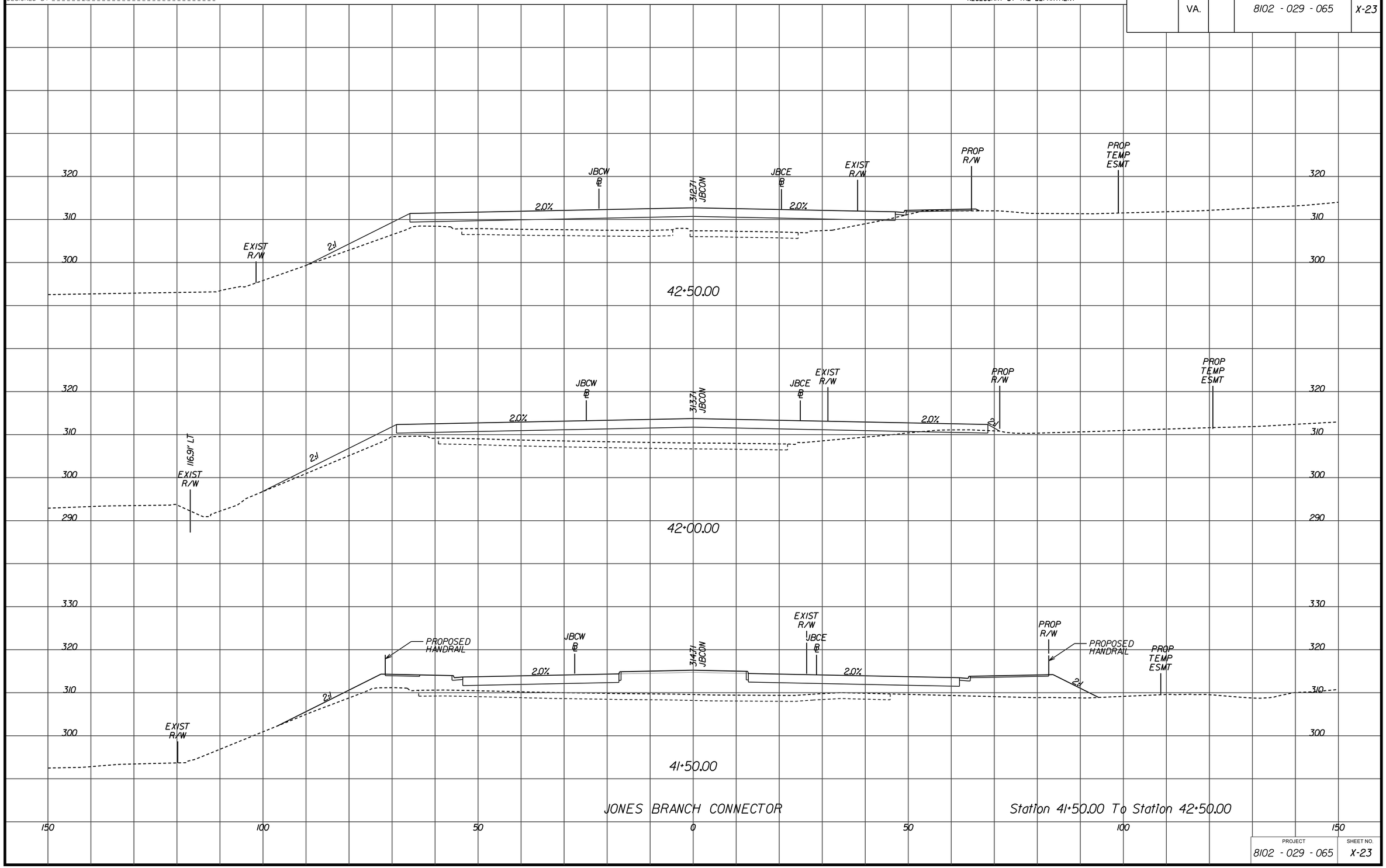

JONES BRANCH CONNECTOR

Station 41+50.00 To Station 42+50.00

PROJECT	SHEET NO.
8102 - 029 - 065	X-23

1/17/2013

d0707tlay_Jbc.dgn
$DGNLEV

PROJECT MANAGER Sung S. Shin, PE (703) 877-5753 (RKK)
SURVEYED BY
DESIGN SUPERVISED BY John M. McDowell, PE (703) 246-0028 (RKK)
DESIGNED BY Rummel, Klepper & Kahl, LLP (703) 246-0028

CROSS SECTIONS

SCALE 1 IN. = 10 FT

DESIGN FEATURES RELATING TO CONSTRUCTION OR TO REGULATION AND CONTROL OF TRAFFIC MAY BE SUBJECT TO CHANGE AS DEEMED NECESSARY BY THE DEPARTMENT

REVISED	STATE	STATE ROUTE	STATE PROJECT	SHEET NO
	VA.		8102 - 029 - 065	X-24

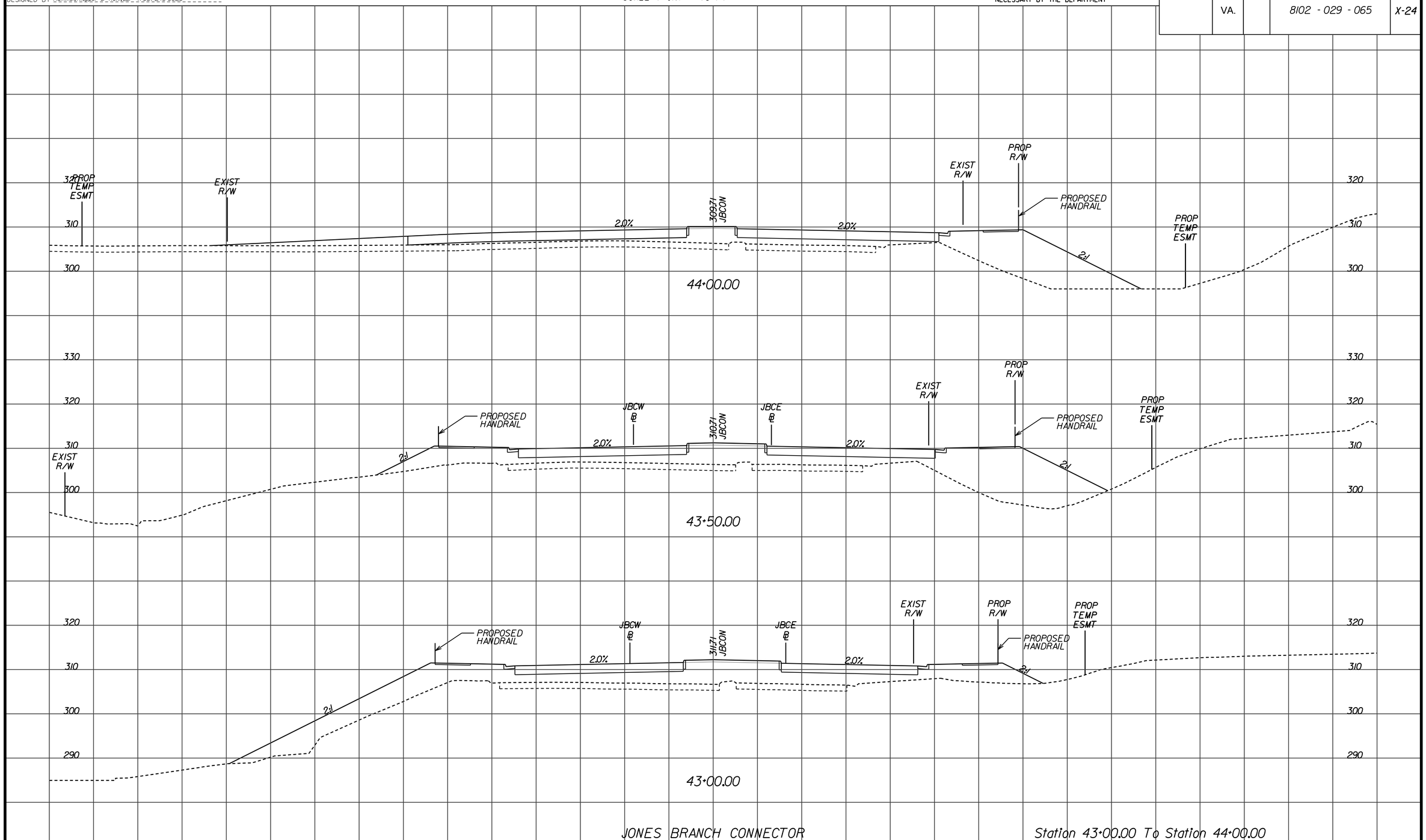

JONES BRANCH CONNECTOR

Station 43+00.00 To Station 44+00.00

PROJECT	SHEET NO.
8102 - 029 - 065	X-24

1/17/2013

d0707tlay_1bc.dgn
$DGNLEV

PROJECT MANAGER Sung S. Shin, PE (703) 877-5753 (RKK)
SURVEYED BY
DESIGN SUPERVISED BY John M. McDowell, PE (703) 246-0028 (RKK)
DESIGNED BY Rummel, Klepper & Kahl, LLP (703) 246-0028

CROSS SECTIONS

SCALE 1 IN. = 10 FT

DESIGN FEATURES RELATING TO CONSTRUCTION OR TO REGULATION AND CONTROL OF TRAFFIC MAY BE SUBJECT TO CHANGE AS DEEMED NECESSARY BY THE DEPARTMENT

REVISED	STATE	STATE ROUTE	STATE PROJECT	SHEET NO.
	VA.		8102 - 029 - 065	X-25

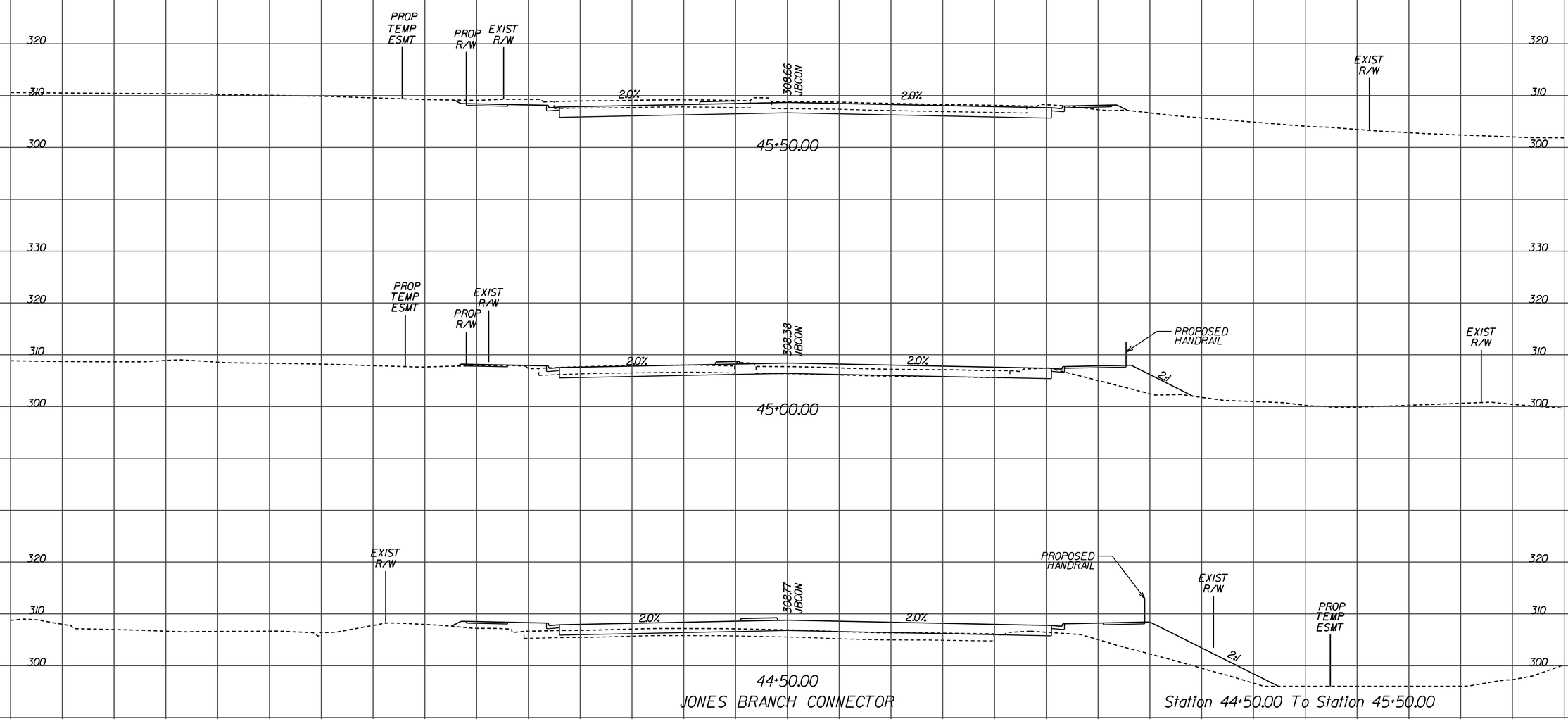

PROJECT	SHEET NO.
8102 - 029 - 065	X-25

1/17/2013

d0707tlay_1bc.dgn
$DGNLEV

PROJECT MANAGER Sung S. Shin, PE (703) 877-5753 (RKK)
SURVEYED BY
DESIGN SUPERVISED BY John M. McDowell, PE (703) 246-0028 (RKK)
DESIGNED BY Rummel, Klepper & Kahl, LLP (703) 246-0028

CROSS SECTIONS

SCALE 1 IN. = 10 FT

DESIGN FEATURES RELATING TO CONSTRUCTION OR TO REGULATION AND CONTROL OF TRAFFIC MAY BE SUBJECT TO CHANGE AS DEEMED NECESSARY BY THE DEPARTMENT

REVISED	STATE	STATE ROUTE	STATE PROJECT	SHEET NO
	VA.		8102 - 029 - 065	X-26

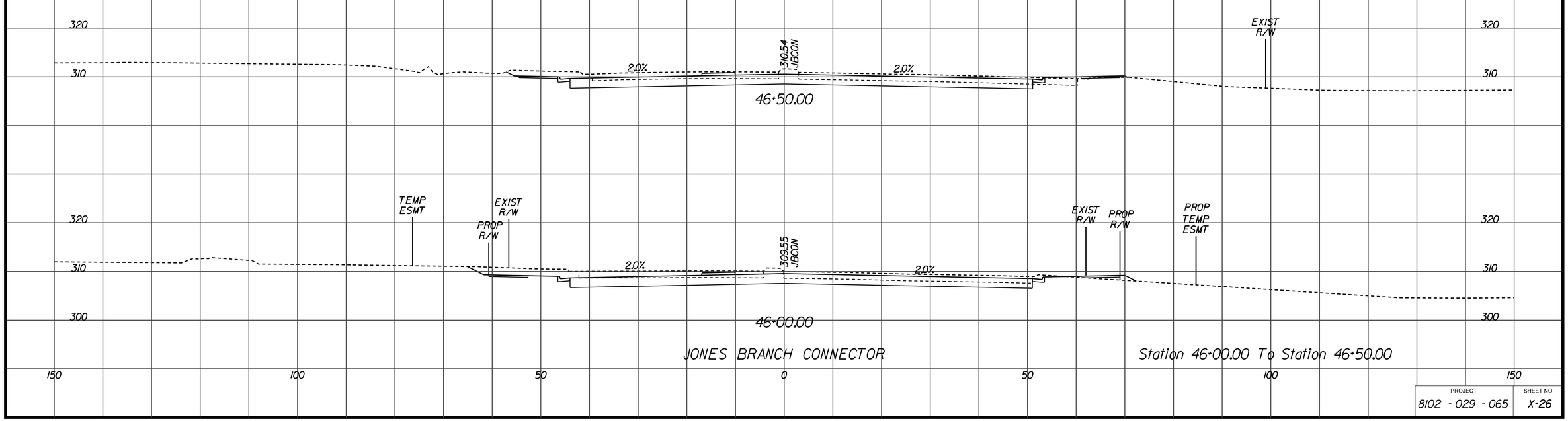

PROJECT	SHEET NO.
8102 - 029 - 065	X-26

1/17/2013

d0707tlay_capserv.dgn
$DGNLEV

PROJECT MANAGER Sung S. Shin, PE (703) 877-5753 (RKK)
SURVEYED BY
DESIGN SUPERVISED BY John M. McDowell, PE (703) 246-0028 (RKK)
DESIGNED BY Rummel, Klepper & Kahl, LLP (703) 246-0028

CROSS SECTIONS

SCALE 1 IN. = 10 FT

DESIGN FEATURES RELATING TO CONSTRUCTION OR TO REGULATION AND CONTROL OF TRAFFIC MAY BE SUBJECT TO CHANGE AS DEEMED NECESSARY BY THE DEPARTMENT

REVISED	STATE	STATE ROUTE	STATE PROJECT	SHEET NO.
	VA.		8102 - 029 - 065	X-27

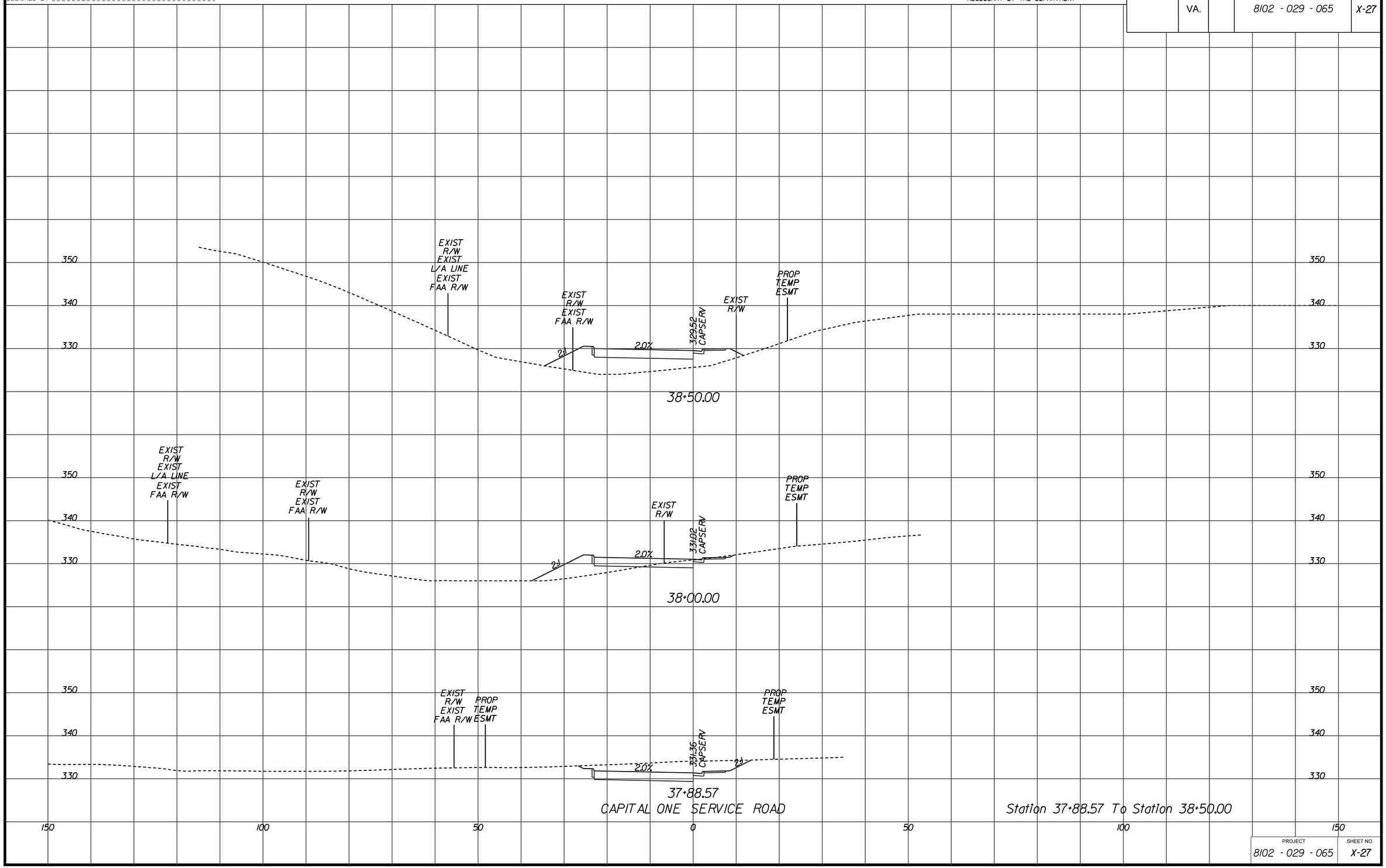

PROJECT	SHEET NO.
8102 - 029 - 065	X-27

1/17/2013

d0707110y_capserv.dgn
$DGNLEV

PROJECT MANAGER Sung S. Shin, PE (703) 877-5753 (RKK)
SURVEYED BY
DESIGN SUPERVISED BY John M. McDowell, PE (703) 246-0028 (RKK)
DESIGNED BY Rummel, Klepper & Kahl, LLP (703) 246-0028

CROSS SECTIONS

SCALE 1 IN. = 10 FT

DESIGN FEATURES RELATING TO CONSTRUCTION OR TO REGULATION AND CONTROL OF TRAFFIC MAY BE SUBJECT TO CHANGE AS DEEMED NECESSARY BY THE DEPARTMENT

REVISED	STATE	STATE ROUTE	STATE PROJECT	SHEET NO
	VA.		8102 - 029 - 065	X-28

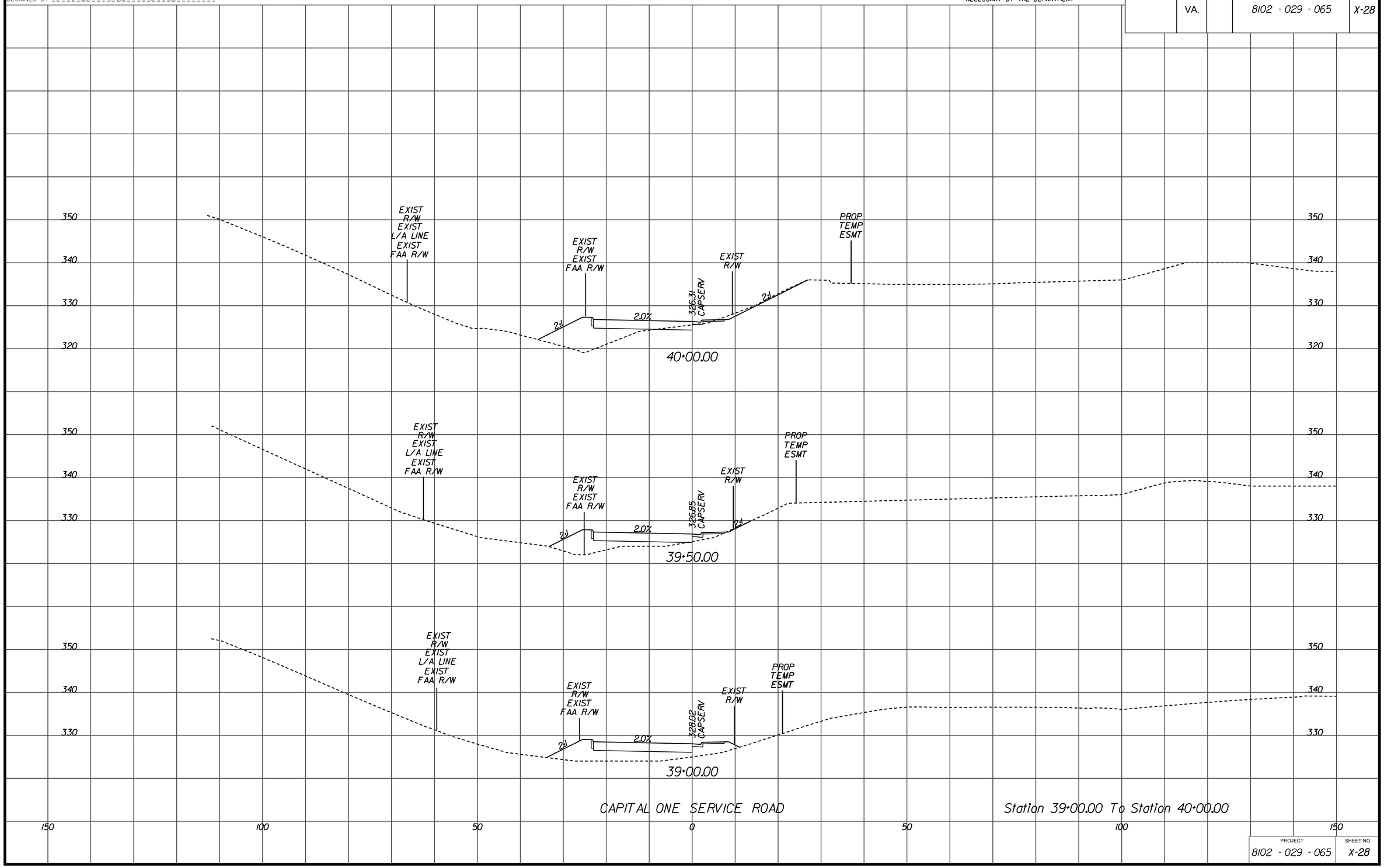

CAPITAL ONE SERVICE ROAD

Station 39+00.00 To Station 40+00.00

PROJECT	SHEET NO.
8102 - 029 - 065	X-28

1/17/2013

d0707tlay_capserv.dgn
$DGNLEV

PROJECT MANAGER Sung S. Shin, PE (703) 877-5753 (RKK)
SURVEYED BY
DESIGN SUPERVISED BY John M. McDowell, PE (703) 246-0028 (RKK)
DESIGNED BY Rummel, Klepper & Kahl, LLP (703) 246-0028

CROSS SECTIONS

SCALE 1 IN. = 10 FT

DESIGN FEATURES RELATING TO CONSTRUCTION OR TO REGULATION AND CONTROL OF TRAFFIC MAY BE SUBJECT TO CHANGE AS DEEMED NECESSARY BY THE DEPARTMENT

REVISED	STATE	STATE ROUTE	STATE PROJECT	SHEET NO.
	VA.		8102 - 029 - 065	X-29

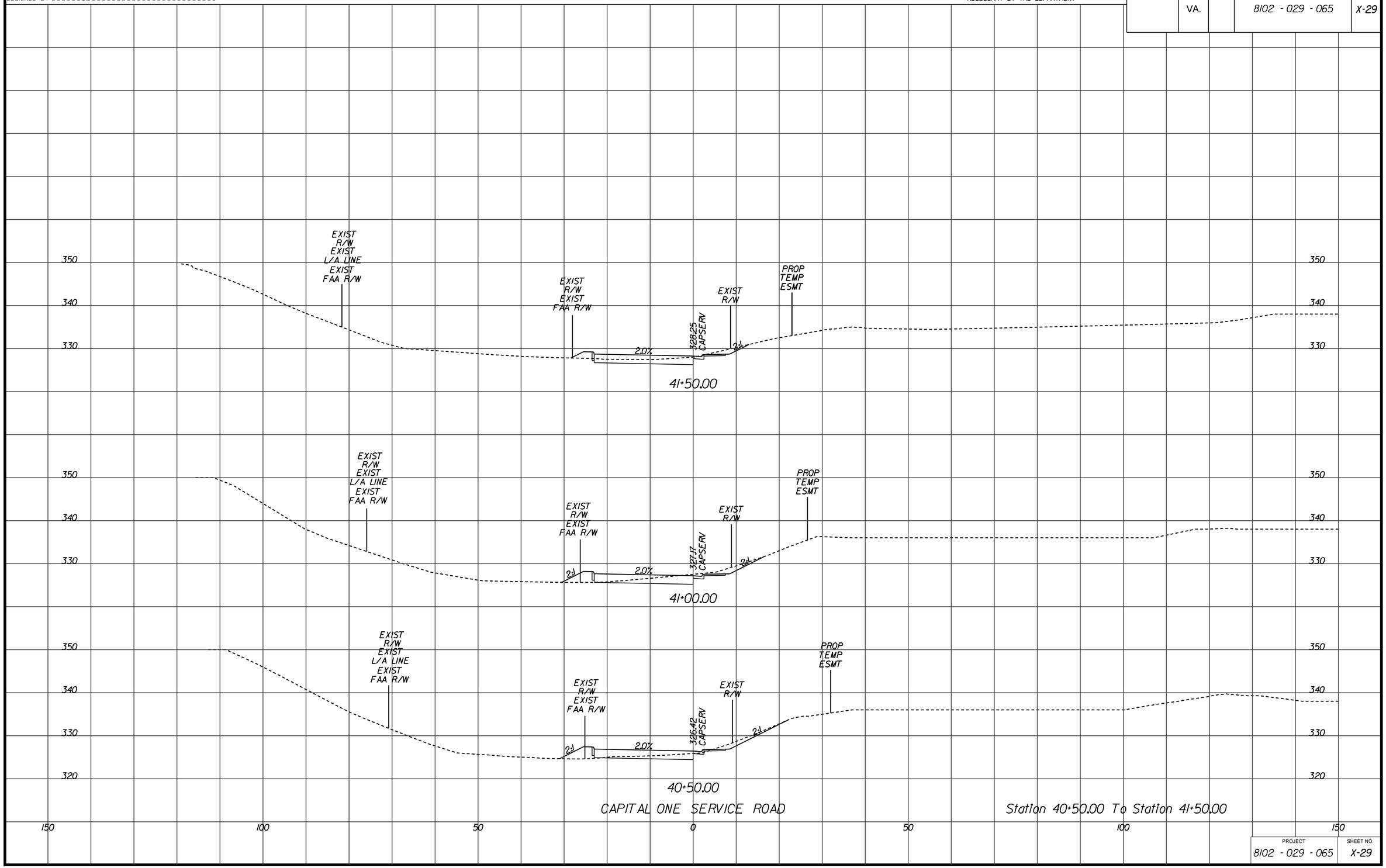

CAPITAL ONE SERVICE ROAD

Station 40+50.00 To Station 41+50.00

PROJECT	SHEET NO.
8102 - 029 - 065	X-29

1/17/2013

d0707tlay_capserv.dgn
$DGNLEV

PROJECT MANAGER Sung S. Shin, PE (703) 877-5753 (RKK)
SURVEYED BY
DESIGN SUPERVISED BY John M. McDowell, PE (703) 246-0028 (RKK)
DESIGNED BY Rummel, Klepper & Kahl, LLP (703) 246-0028

CROSS SECTIONS

SCALE 1 IN. = 10 FT

DESIGN FEATURES RELATING TO CONSTRUCTION OR TO REGULATION AND CONTROL OF TRAFFIC MAY BE SUBJECT TO CHANGE AS DEEMED NECESSARY BY THE DEPARTMENT

REVISED	STATE	STATE ROUTE	STATE PROJECT	SHEET NO.
	VA.		8102 - 029 - 065	X-30

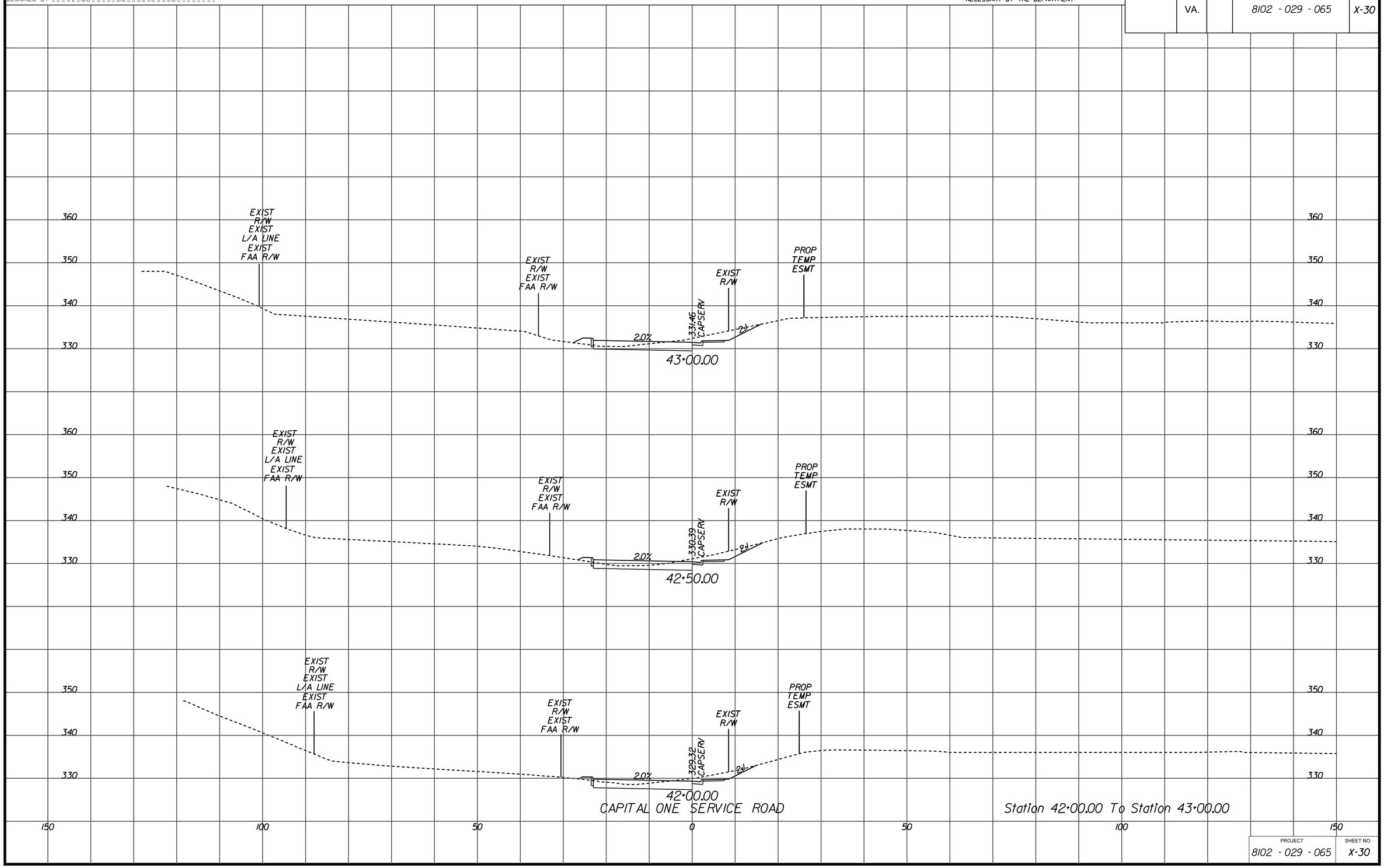

CAPITAL ONE SERVICE ROAD

Station 42+00.00 To Station 43+00.00

PROJECT	SHEET NO.
8102 - 029 - 065	X-30

1/17/2013

d07071lay_capserv.dgn
$DGNLEV

PROJECT MANAGER Sung S. Shin, PE (703) 877-5753 (RKK)
SURVEYED BY
DESIGN SUPERVISED BY John M. McDowell, PE (703) 246-0028 (RKK)
DESIGNED BY Rummel, Klepper & Kahl, LLP (703) 246-0028

CROSS SECTIONS

SCALE 1 IN. = 10 FT

DESIGN FEATURES RELATING TO CONSTRUCTION OR TO REGULATION AND CONTROL OF TRAFFIC MAY BE SUBJECT TO CHANGE AS DEEMED NECESSARY BY THE DEPARTMENT

REVISED	STATE	STATE ROUTE	STATE PROJECT	SHEET NO.
	VA.		8102 - 029 - 065	X-31

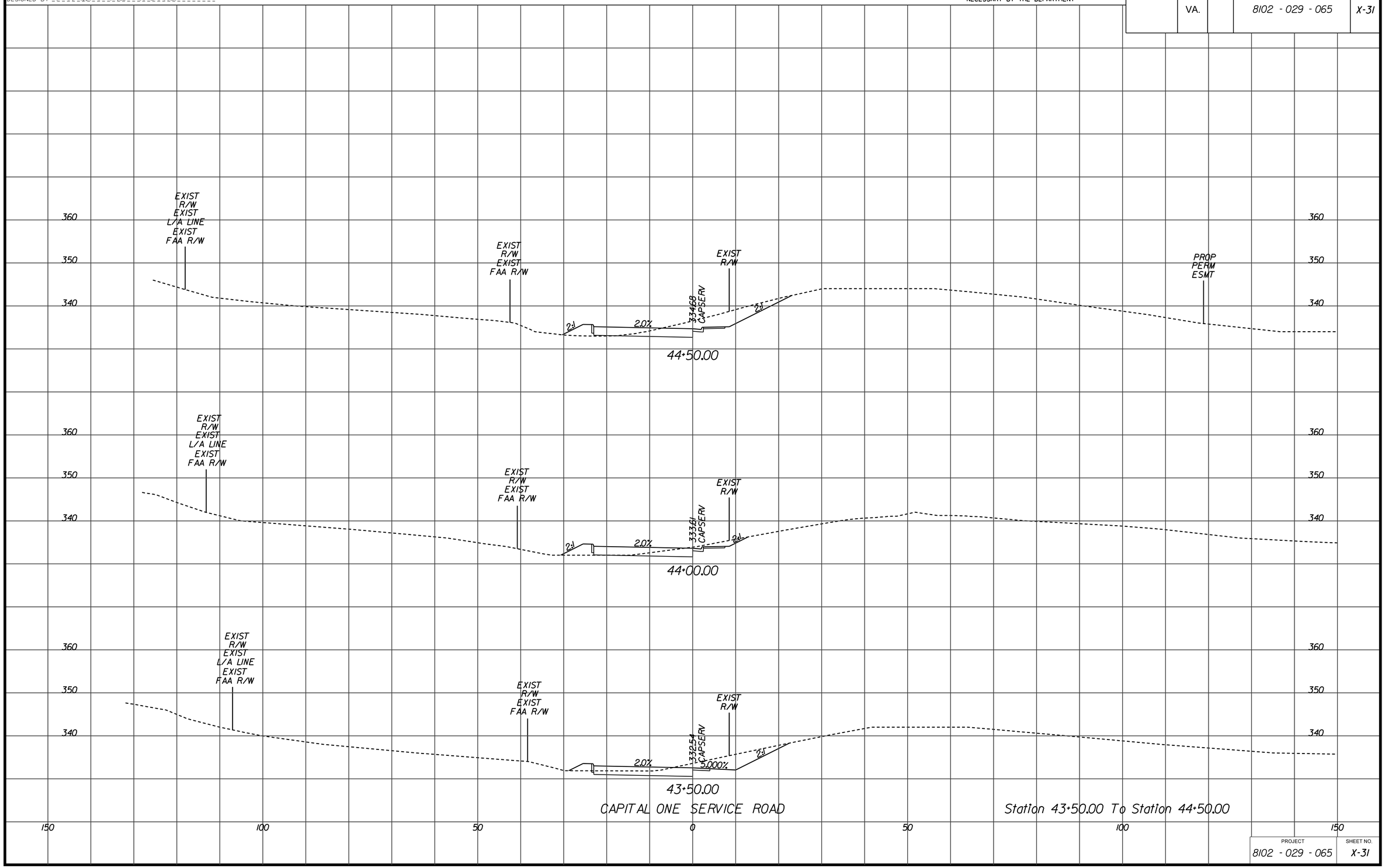

CAPITAL ONE SERVICE ROAD

Station 43+50.00 To Station 44+50.00

PROJECT	SHEET NO.
8102 - 029 - 065	X-31

1/17/2013

d0707tlay_capserv.dgn
$DGNLEV

PROJECT MANAGER Sung S. Shin, PE (703) 877-5753 (RKK)
SURVEYED BY
DESIGN SUPERVISED BY John M. McDowell, PE (703) 246-0028 (RKK)
DESIGNED BY Rummel, Klepper & Kahl, LLP (703) 246-0028

CROSS SECTIONS

SCALE 1 IN. = 10 FT

DESIGN FEATURES RELATING TO CONSTRUCTION OR TO REGULATION AND CONTROL OF TRAFFIC MAY BE SUBJECT TO CHANGE AS DEEMED NECESSARY BY THE DEPARTMENT

REVISED	STATE	STATE ROUTE	STATE PROJECT	SHEET NO.
	VA.		8102 - 029 - 065	X-32

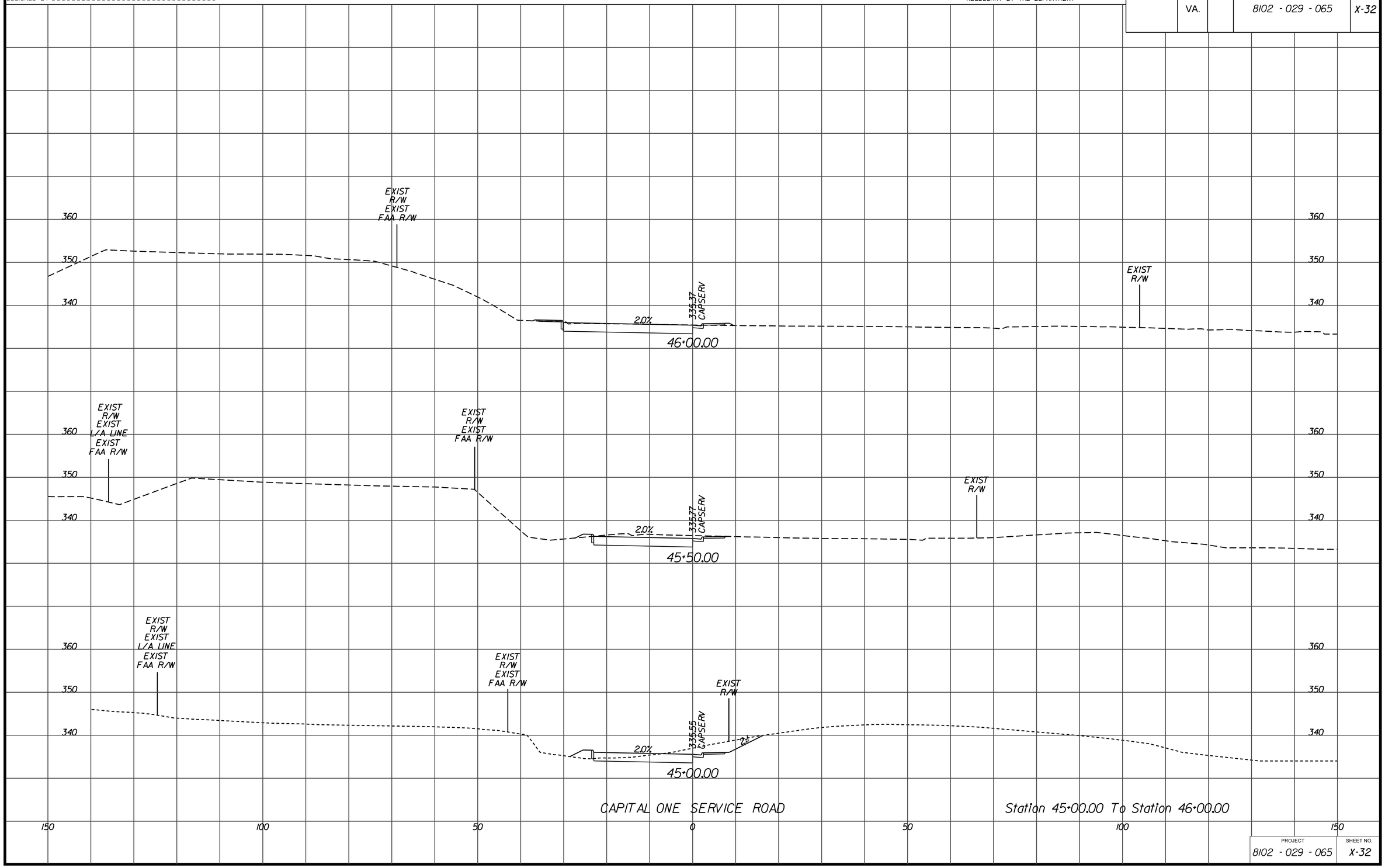

PROJECT	SHEET NO.
8102 - 029 - 065	X-32

1/17/2013

d0707tlay_capserv.dgn

$DGNLEV

PROJECT MANAGER Sung S. Shin, PE (703) 877-5753 (RKK)
SURVEYED BY
DESIGN SUPERVISED BY John M. McDowell, PE (703) 246-0028 (RKK)
DESIGNED BY Rummel, Klepper & Kahl, LLP (703) 246-0028

CROSS SECTIONS

SCALE 1 IN. = 10 FT

DESIGN FEATURES RELATING TO CONSTRUCTION OR TO REGULATION AND CONTROL OF TRAFFIC MAY BE SUBJECT TO CHANGE AS DEEMED NECESSARY BY THE DEPARTMENT

REVISED	STATE	STATE ROUTE	STATE PROJECT	SHEET NO
	VA.		8102 - 029 - 065	X-33

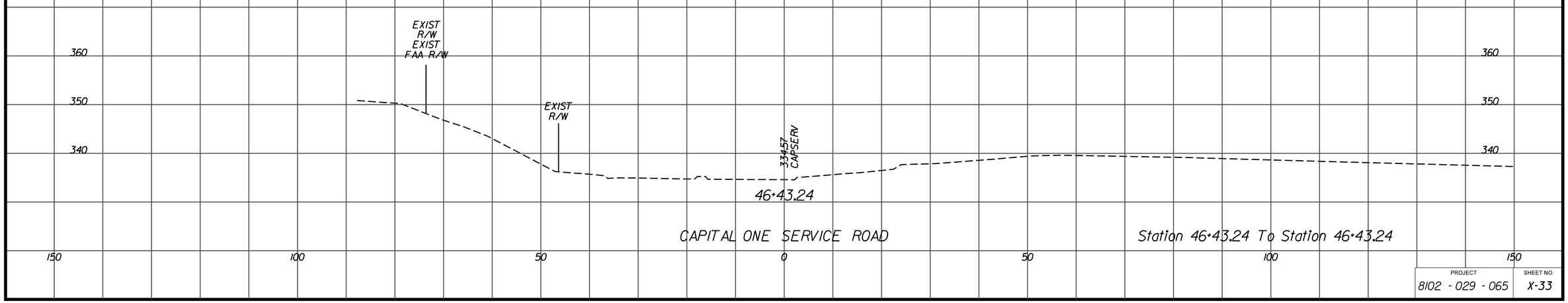

CAPITAL ONE SERVICE ROAD

Station 46+43.24 To Station 46+43.24

PROJECT	SHEET NO.
8102 - 029 - 065	X-33

1/17/2013

d0707110y_capone.dgn
$DGNLEV

PROJECT MANAGER Sung S. Shin, PE (703) 877-5753 (RKK)
SURVEYED BY
DESIGN SUPERVISED BY John M. McDowell, PE (703) 246-0028 (RKK)
DESIGNED BY Rummel, Klepper & Kahl, LLP (703) 246-0028

CROSS SECTIONS

SCALE 1 IN. = 10 FT

DESIGN FEATURES RELATING TO CONSTRUCTION OR TO REGULATION AND CONTROL OF TRAFFIC MAY BE SUBJECT TO CHANGE AS DEEMED NECESSARY BY THE DEPARTMENT

REVISED	STATE	STATE ROUTE	STATE PROJECT	SHEET NO
	VA.		8102 - 029 - 065	X-34

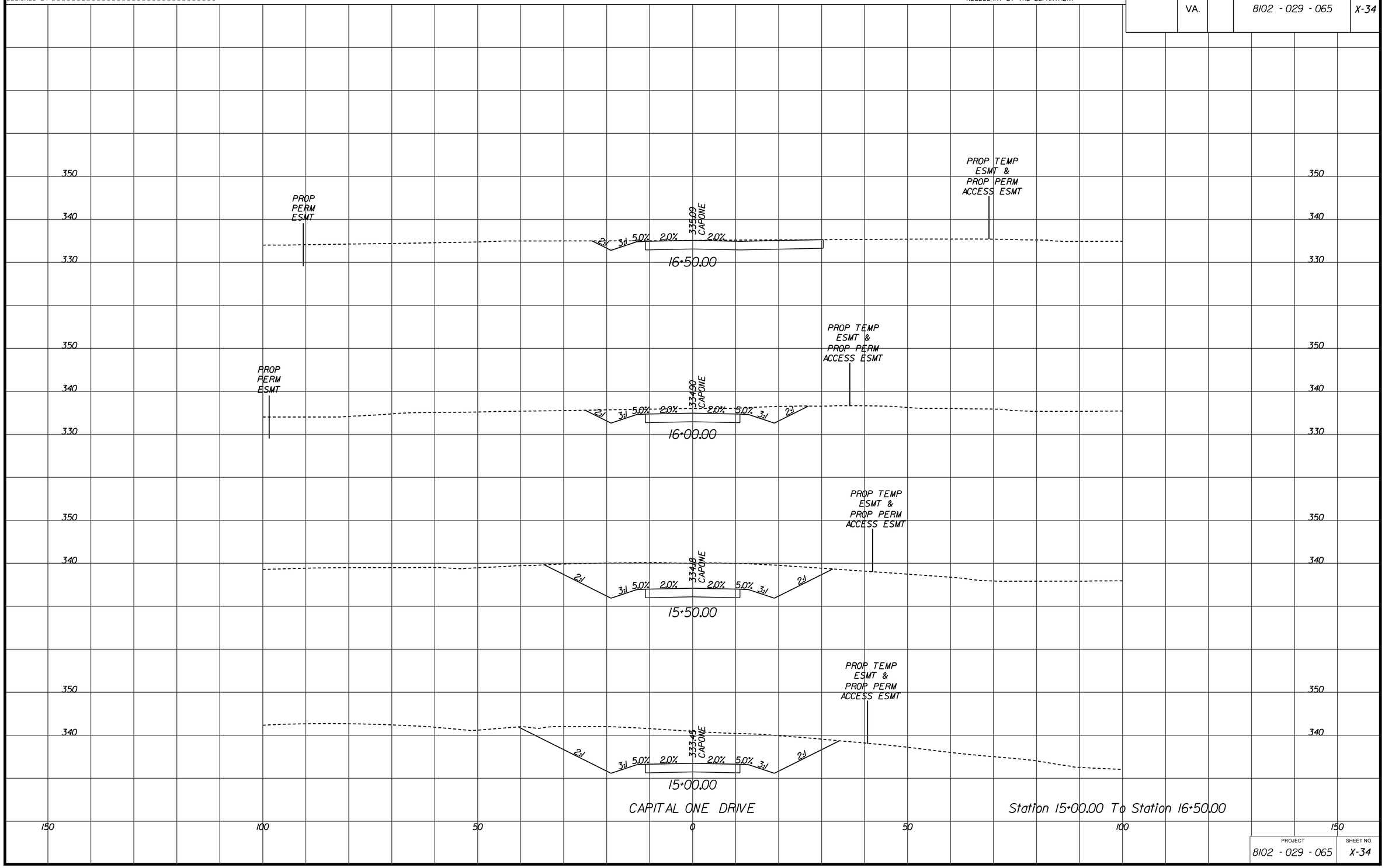

CAPITAL ONE DRIVE

Station 15+00.00 To Station 16+50.00

PROJECT	SHEET NO.
8102 - 029 - 065	X-34

1/17/2013

d07077lay_capone.dgn
$DGNLEV

PROJECT MANAGER Sung S. Shin, PE (703) 877-5753 (RKK)
SURVEYED BY
DESIGN SUPERVISED BY John M. McDowell, PE (703) 246-0028 (RKK)
DESIGNED BY Rummel, Klepper & Kahl, LLP (703) 246-0028

CROSS SECTIONS

SCALE 1 IN. = 10 FT

DESIGN FEATURES RELATING TO CONSTRUCTION OR TO REGULATION AND CONTROL OF TRAFFIC MAY BE SUBJECT TO CHANGE AS DEEMED NECESSARY BY THE DEPARTMENT

REVISED	STATE	STATE ROUTE	STATE PROJECT	SHEET NO.
	VA.		8102 - 029 - 065	X-35

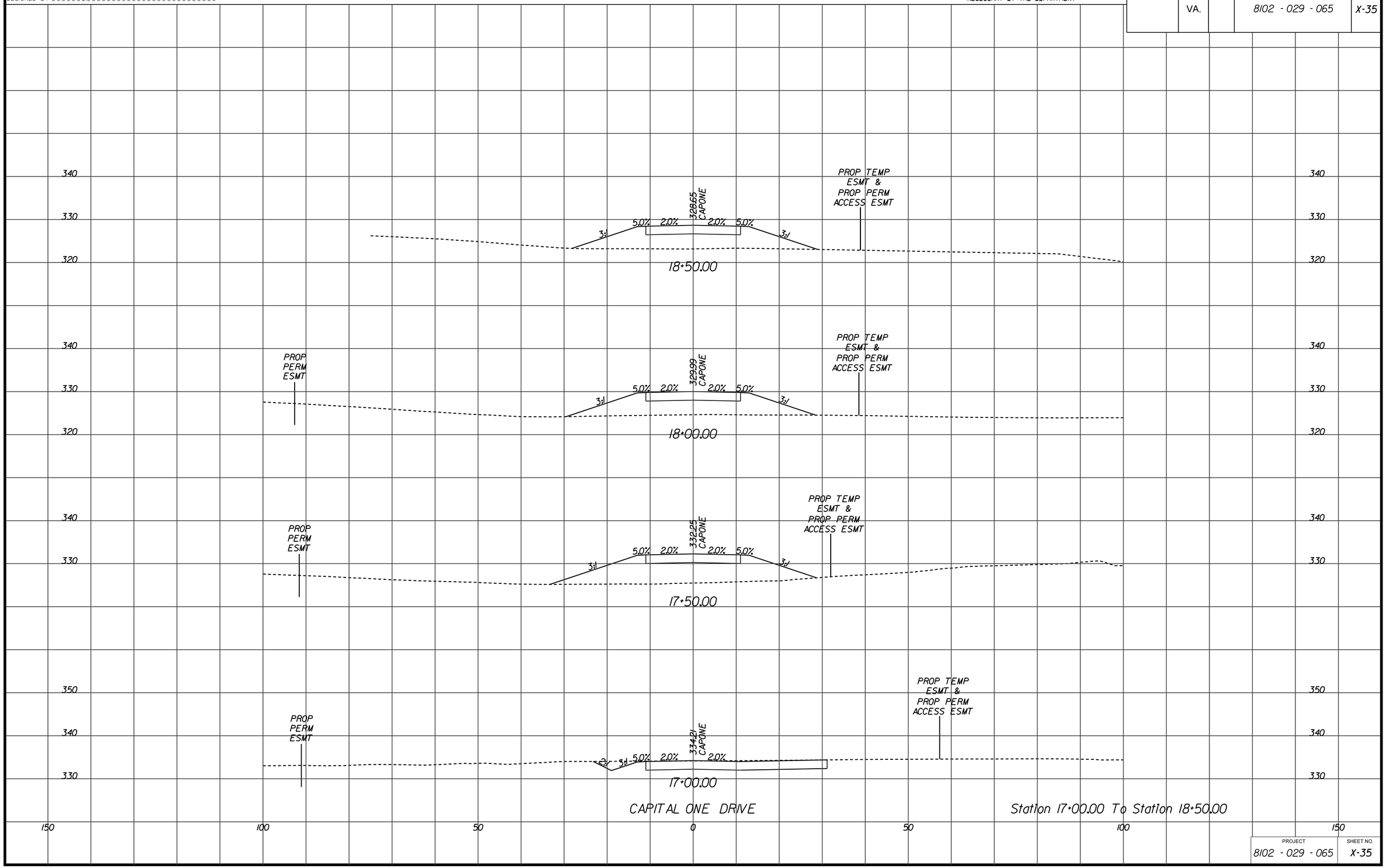

PROJECT	SHEET NO.
8102 - 029 - 065	X-35

1/17/2013

d0707110y_capone.dgn

$DGNLEV

PROJECT MANAGER Sung S.Shin, PE (703) 877-5753 (RKK)
SURVEYED BY
DESIGN SUPERVISED BY John M. McDowell, PE (703) 246-0028 (RKK)
DESIGNED BY Rummel, Klepper & Kahl, LLP (703) 246-0028

CROSS SECTIONS

SCALE 1 IN. = 10 FT

DESIGN FEATURES RELATING TO CONSTRUCTION OR TO REGULATION AND CONTROL OF TRAFFIC MAY BE SUBJECT TO CHANGE AS DEEMED NECESSARY BY THE DEPARTMENT

REVISED	STATE	STATE ROUTE	STATE PROJECT	SHEET NO
	VA.		8102 - 029 - 065	X-36

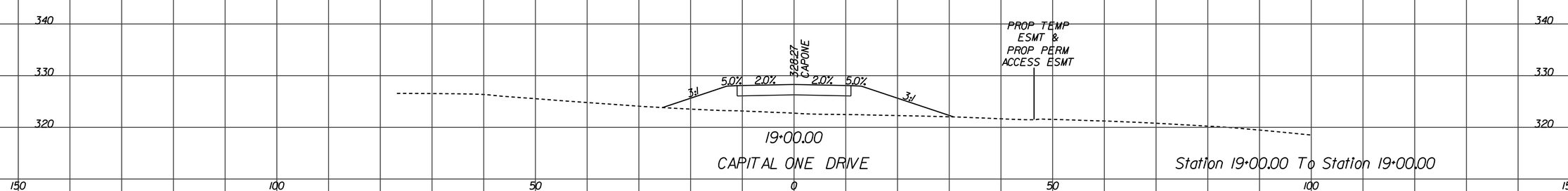

PROJECT	SHEET NO.
8102 - 029 - 065	X-36

1/17/2013

STATE	FEDERAL AID PROJECT	STATE ROUTE	STATE PROJECT	SHEET NO.
VA.		00	0000 - 000 - 000 (SEE TABULATION BELOW FOR SECTION NUMBERS)	1

FOR INDEX OF SHEETS SEE SHEET 1B

THIS PROJECT WAS DEVELOPED UTILIZING THE DEPARTMENT'S ENGINEERING DESIGN PACKAGE (GEOPAK).
GEOPAK Computer Identification No. 103907

COMMONWEALTH OF VIRGINIA

DEPARTMENT OF TRANSPORTATION

FAIRFAX COUNTY
JONES BRANCH CONNECTOR
FROM: JONES BRANCH DRIVE
TO: DOLLEY MADISON BOULEVARD (ROUTE 123)

BRIDGE AND RETAINING WALL PLANS

FUNCTIONAL CLASSIFICATION AND TRAFFIC DATA	
URBAN COLLECTOR	
	Fr: Jones Branch Drive To: Dolley Madison Boulevard (Route 123)
ADT	
ADT	
DHV	
D (%) (design hour)	
T (%) (design hour)	
V (MPH)	30

THESE PLANS ARE DEVELOPED IN ACCORDANCE WITH THE "TRANSPORTATION DESIGN STANDARDS FOR TYSONS CORNER URBAN CENTER" DATED SEPTEMEBER 13, 2011.

30% PLANS
JANUARY 11, 2013

THESE PLANS ARE UNFINISHED AND ARE NOT TO BE USED FOR ANY TYPE OF CONSTRUCTION.

PROJECT MANAGER Sung_S._Shin_PE._(703).877-5753
SURVEYED BY
DESIGN SUPERVISED BY John_M._McDowell_P.E._(703).246-0028_(RKS)
DESIGNED BY Rummel_Klepper_&_Kahl_LLP_(703).246-0028

CONVENTIONAL SIGNS

STATE LINE
COUNTY LINE
CITY,TOWN OR VILLAGE
RIGHT OF WAY LINE
FENCE LINE
UNFENCED PROPERTY LINE
FENCED PROPERTY LINE
WATER LINE
SANITARY SEWER LINE
GAS LINE
ELECTRIC UNDERGROUND CABLE
TRAVELED WAY
GUARD RAIL
RETAINING WALL
RAILROADS
BASE OR SURVEY LINE
LEVEE OR EMBANKMENT
BRIDGES
CULVERTS
DROP INLET
POWER POLES
TELEPHONE OR TELEGRAPH POLES
TELEPHONE OR TELEGRAPH LINES
HEDGE
TREES
HEAVY WOODS
GROUND ELEVATION
GRADE ELEVATION

THE COMPLETE ELECTRONIC PDF VERSION OF THE PLAN ASSEMBLY AS AWARDED, HAS BEEN SEALED AND SIGNED USING DIGITAL SIGNATURES AND THE OFFICIAL PLAN ASSEMBLY IN ELECTRONIC FORMAT IS STORED IN THE VDOT CENTRAL OFFICE PLAN LIBRARY, INCLUDING ALL SUBSEQUENT REVISIONS, WILL BE THE OFFICIAL CONSTRUCTION PLANS. FOR INFORMATION RELATIVE TO ELECTRONIC FILES AND LAYERED PLANS, SEE THE GENERAL NOTES.

DESIGN FEATURES RELATING TO CONSTRUCTION OR TO REGULATION AND CONTROL OF TRAFFIC MAY BE SUBJECT TO CHANGE AS DEEMED NECESSARY BY THE DEPARTMENT.

THIS PROJECT IS TO BE CONSTRUCTED IN ACCORDANCE WITH THE DEPARTMENT'S 2007 ROAD AND BRIDGE SPECIFICATIONS, 2008 ROAD AND BRIDGE STANDARDS, 2009 MUTCD, 2011 VIRGINIA SUPPLEMENT TO THE MUTCD, 2011 VIRGINIA WORK AREA PROTECTION MANUAL AND AS AMENDED BY CONTRACT PROVISIONS AND THE COMPLETE ELECTRONIC PDF VERSION OF THE PLAN ASSEMBLY.

ALL CURVES ARE TO BE SUPERELEVATED, TRANSITIONED AND WIDENED IN ACCORDANCE WITH STANDARD N/A, EXCEPT WHERE OTHERWISE NOTED.

THE ORIGINAL APPROVED TITLE SHEET(S), INCLUDING ORIGINAL SIGNATURES, ARE FILED IN THE VDOT CENTRAL OFFICE PLAN LIBRARY. ANY MISUSE OF ELECTRONIC FILES, INCLUDING SCANNED SIGNATURES, IS ILLEGAL AND ENFORCED TO THE FULL EXTENT OF THE LAW.

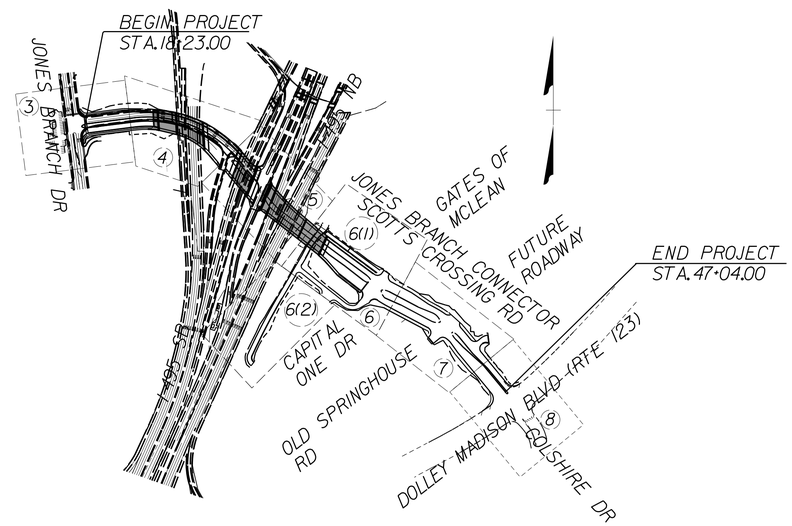

SCALE
0' 400' 800'

Population 1,081,726 (2010 Census)

STATE PROJECT NO.	SECTION	FEDERAL AID PROJECT NO.	TYPE CODE	UPC NO.	EQUALITIES FEET	LENGTH INCLUDING BRIDGE(S) FEET	LENGTH INCLUDING BRIDGE(S) MILES	LENGTH EXCLUDING BRIDGE(S) FEET	LENGTH EXCLUDING BRIDGE(S) MILES	BRIDGE PROJECT NO.	TYPE PROJECT	DESCRIPTION
				103907		2881.00	0.546	2173.92	0.412		PRELIM. ENG.	FROM JONES BRANCH DRIVE
												TO DOLLEY MADISON BLVD

Project Lengths are based on Jones Branch Connector Construction Baseline.

TIER 1 PROJECT

RECOMMENDED FOR APPROVAL FOR RIGHT OF WAY ACQUISITION	
DATE	DISTRICT PLANNING AND INVESTMENT MANAGER
DATE	DISTRICT PROJECT DEVELOPMENT ENGINEER
APPROVED FOR RIGHT OF WAY ACQUISITION	
DATE	DISTRICT ADMINISTRATOR

REVISED

RECOMMENDED FOR APPROVAL FOR CONSTRUCTION	
DATE	DISTRICT PLANNING AND INVESTMENT MANAGER
DATE	DISTRICT PROJECT DEVELOPMENT ENGINEER
APPROVED FOR CONSTRUCTION	
DATE	DISTRICT ADMINISTRATOR

Copyright 2013 , Commonwealth of Virginia

STATE	FEDERAL AID ROUTE	FEDERAL AID PROJECT	STATE ROUTE	STATE PROJECT	SHEET NO.
VA.	—			8102-029-065	2

INDEX OF SHEETS

Sheet No.	Description
1	Cover Sheet
2	Index of Sheets and General Notes
3	Location Map
4	Bridge No. 2248 and B658 - General Plan and Elevation
5	Bridge No. 2248 - Abutment A Plan, Elevation and Section
6	Bridge No. 2248 - Abutment B Plan, Elevation and Section
7	Bridge No. 2248 - Pier Plan, Elevation and Section
8	Bridge No. 2248 - Transverse Section, Span A
9	Bridge No. 2248 and B658 - Transverse Section, Span B
10	Bridge No. 2242 and B628 - General Plan and Elevation
11	Bridge No. 2242 - Abutment A Plan and Elevation
12	Bridge No. 2242 - Abutment B Plan and Elevation
13	Bridge No. 2242 - Typical Abutment Sections
14	Bridge No. 2242 and B628 - Transverse Section
15	Bridge No. 2902 - General Plan and Elevation
16	Bridge No. 2902 - Abutment A Plan, Elevation and Section
17	Bridge No. 2902 - Abutment B Plan, Elevation and Section
18	Bridge No. 2902 - Pier 1 Plan, Elevation and Section
19	Bridge No. 2902 - Pier 2 Plan, Elevation and Section
20	Bridge No. 2902 - Transverse Section
21	Retaining Wall RW001 - Plan and Elevation
22	Retaining Wall RW002 - Plan and Elevation
23	Retaining Wall RW003 - Plan and Elevation
24	Retaining Wall RW004 - Plan and Elevation
25	Retaining Wall RW005 - Plan and Elevation
26	Retaining Wall RW006 - Plan
27	Retaining Wall RW006 - Elevation

GENERAL NOTES:

The original approved sheet, including original signatures, is filed in the VDOT Central Office. Any misuse of electronic files, including scanned signatures, is illegal. Violators will be prosecuted to the full extent of the applicable laws.

Capacity: HL-93 loading.

Specifications:

Construction: Virginia Department of Transportation Road and Bridge Specifications, 2007.

Design: AASHTO LRFD Bridge Design Specifications, 5th Edition, 2010; 2010 Interim Specifications; and VDOT Modifications.

Standards: Virginia Department of Transportation Road and Bridge Standards, 2008.

These plans are incomplete unless accompanied by the Supplemental Specifications and Special Provisions included in the contract documents.

Design loading includes 20 psf allowance for construction tolerances and construction methods.

All structural steel, except in bearings and sole plates, shall be ASTM A709 Grade 50W and shall be unpainted except as required by Section 407 of the Specifications. Structural steel in bearings and sole plates shall be ASTM A709 Grade 36 and shall be painted.

Concrete in super-structure including sidewalks, rails and parapets shall be Class A4; in substructure, Class A3.

Low permeability concrete shall be used in this project.

All reinforcing steel shall be deformed and shall conform to ASTM A615, Grade 60 except for reinforcing steels noted as CRR (corrosion resistant reinforcing) which shall conform to the applicable specifications noted in the special provisions. All reinforcing bar dimensions on the detailed drawings are to centers of bars except where otherwise noted and are subject to fabrication and construction tolerances.

Corrosion resistant reinforcing (CRR) steels shall conform to one or more of the three types (low carbon/chromium, stainless clad and solid stainless) listed in the special provision. The minimum yield strength shall be: 100 ksi for low carbon/chromium and 60 ksi for stainless clad steel or solid stainless steel. The type(s) of CRR steel(s) required on this project is/are noted on plan sheets and in the reinforcing steel schedule.

H-Piles have a design capacity of XX tons per pile. H-Piles shall be driven to driving criteria established in accordance with VDOT Special Provision for Dynamic Pile Testing for End-Bearing Piles. Pile points shall be provided for all H-Piles. H-Piles shall be ASTM A709 Grade 50 Steel.

b07077002.dgn

PRELIMINARY PLANS

THESE PLANS ARE UNFINISHED AND ARE NOT TO BE USED FOR ANY TYPE OF CONSTRUCTION

© 2013, Commonwealth of Virginia

RK&K
RICHMOND, VA
STRUCTURAL ENGINEER

PLANS BY:	RK&K
COORDINATED:	
SUPERVISED:	Gary Johnson
DESIGNED:	Ashley Johnson
DRAWN:	Jill Boxley
CHECKED:	Sagar Adivarekar

No.	Description	Date
	Revisions	

COMMONWEALTH OF VIRGINIA
DEPARTMENT OF TRANSPORTATION

STRUCTURE AND BRIDGE DIVISION

INDEX OF SHEETS
AND GENERAL NOTES

Designed: JAJ	Date	Plan No.	Sheet No.
Drawn: JBB Checked: GSJ	Jan. 2013		2

STATE	FEDERAL AID ROUTE	FEDERAL AID PROJECT	STATE ROUTE	STATE PROJECT	SHEET NO.
VA.	—			8102-029-065	3

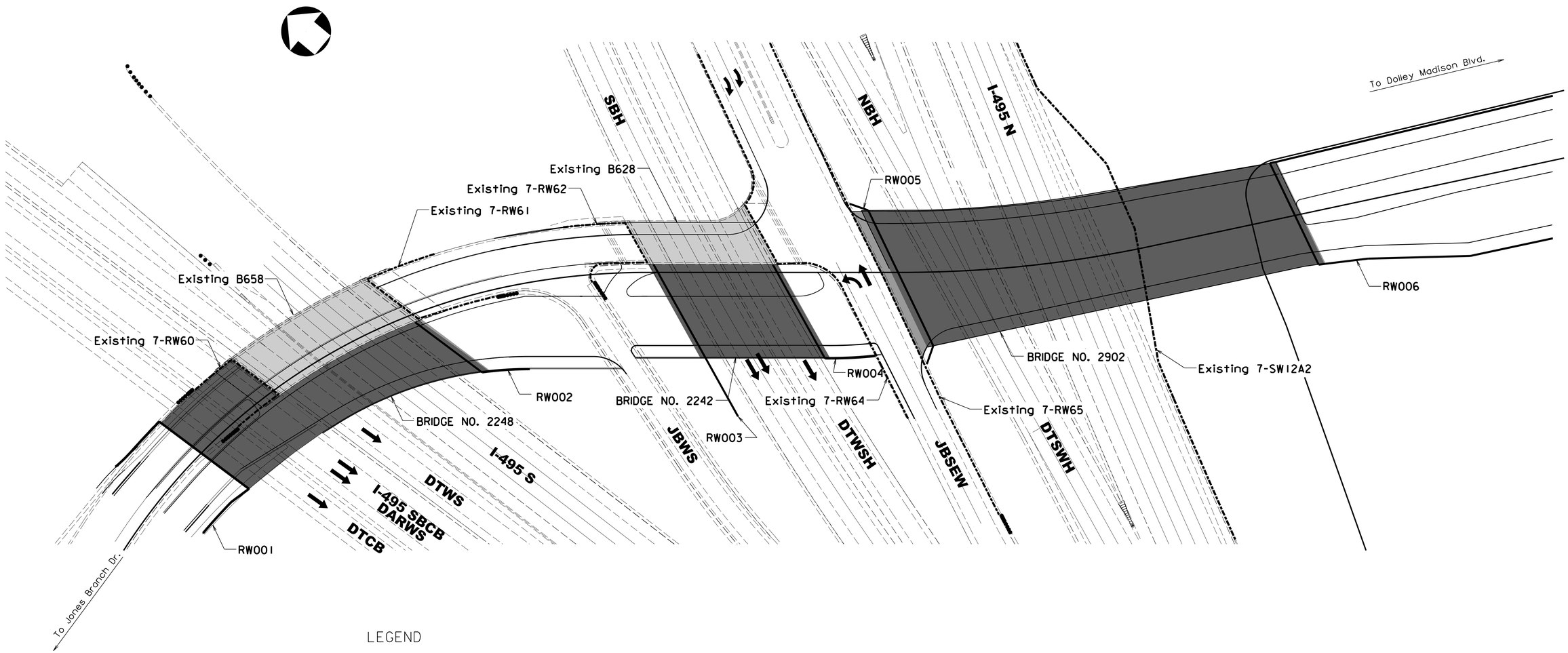

LEGEND

Existing bridge

Proposed bridge

Existing wall

Proposed wall

PRELIMINARY PLANS

THESE PLANS ARE UNFINISHED AND ARE NOT TO BE USED FOR ANY TYPE OF CONSTRUCTION

Scale 1" = 50'

© 2013, Commonwealth of Virginia

RK&K
RICHMOND, VA
STRUCTURAL ENGINEER

No.	Description	Date
	Revisions	

COMMONWEALTH OF VIRGINIA
DEPARTMENT OF TRANSPORTATION

STRUCTURE AND BRIDGE DIVISION

LOCATION MAP

Designed: JAJ	Date	Plan No.	Sheet No.
Drawn: JRB	Jan. 2013		3
Checked: GSJ			

b07077003.dgn

STATE	FEDERAL AID ROUTE	FEDERAL AID PROJECT	STATE ROUTE	STATE PROJECT	SHEET NO.
VA.	—			8102-029-065	4

Notes:

Width: 12'-0" sidewalk, 27'-0" roadway, 24'-0" raised median, roadway varies from 33'-0" to 46'-0", 12'-0" sidewalk. Overall width varies from 107'-9" to 118'-7" face-to-face of rails. Includes reconstruction of 2'-8" on left side and widening of 56'-2" to 64'-2" on right side in span b.

Span layout: 1 - 102'-0" steel plate girder span
1 - 160'-0" steel plate girder span

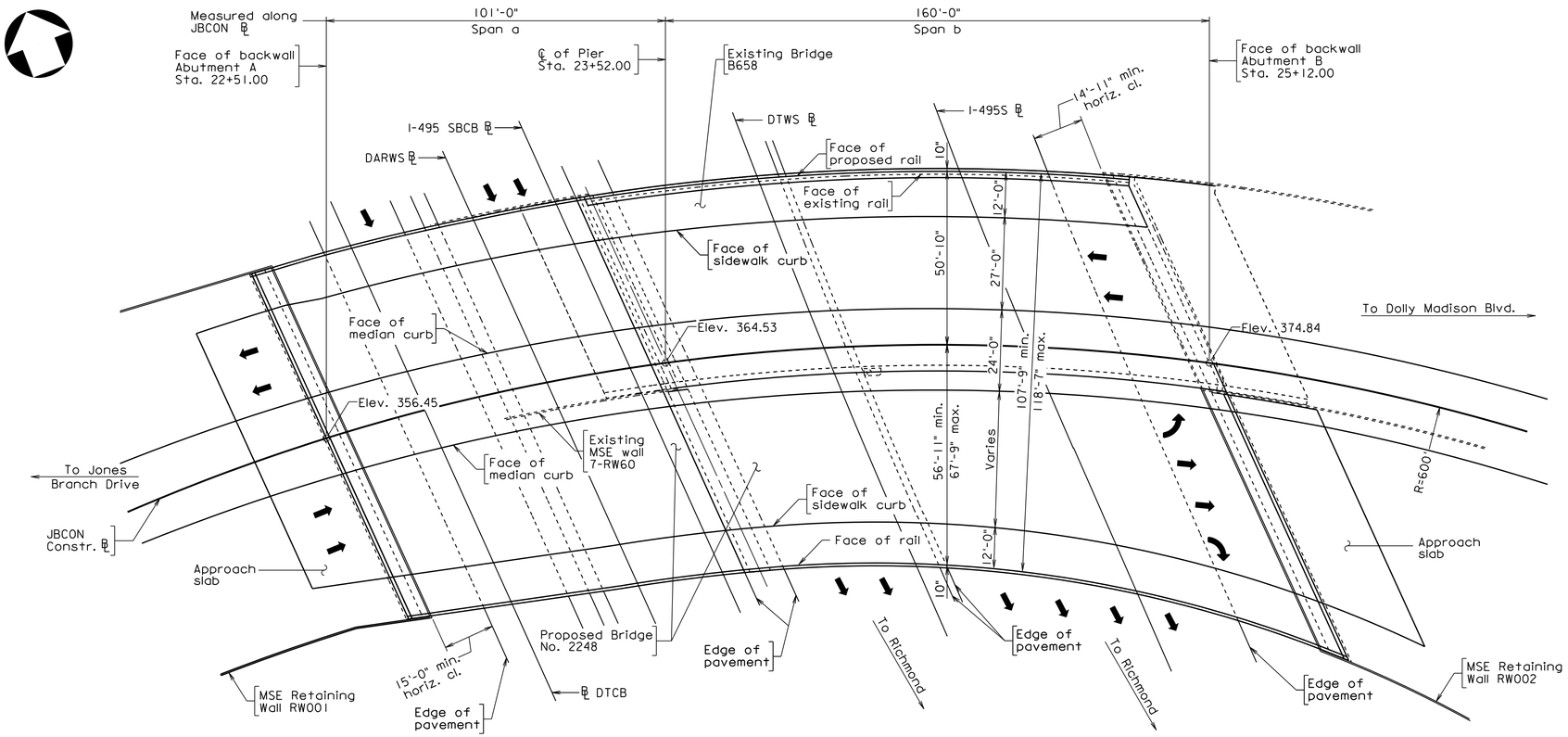

PLAN

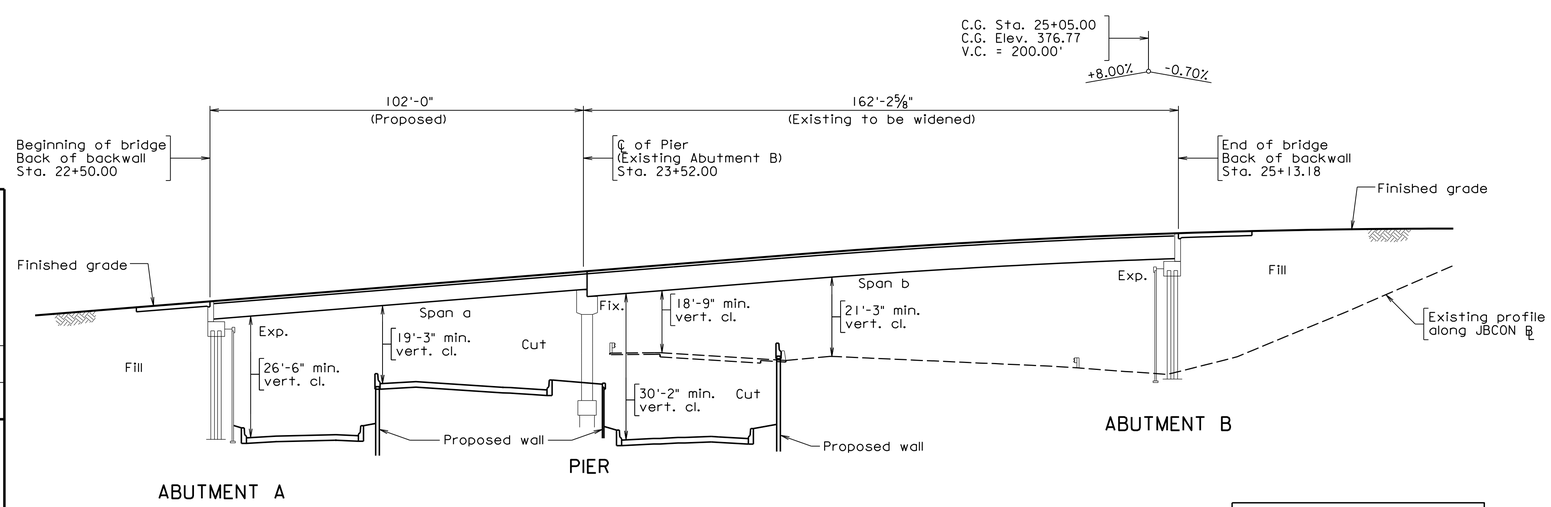

DEVELOPED SECTION ALONG ℄ JBCON

PRELIMINARY PLANS

THESE PLANS ARE UNFINISHED AND ARE NOT TO BE USED FOR ANY TYPE OF CONSTRUCTION

Scale 1" = 20'

© 2013, Commonwealth of Virginia

b07077004.dgn

RK&K
RICHMOND, VA
STRUCTURAL ENGINEER

No.	Description	Date
	Revisions	

COMMONWEALTH OF VIRGINIA
DEPARTMENT OF TRANSPORTATION

STRUCTURE AND BRIDGE DIVISION

BRIDGE NO. 2248 and B658
GENERAL PLAN AND ELEVATION

Designed: JAJ	Date	Plan No.	Sheet No.
Drawn: JRB	Jan. 2013		4
Checked: GSV			

STATE	FEDERAL AID ROUTE	FEDERAL AID PROJECT	STATE ROUTE	STATE PROJECT	SHEET NO.
VA.				8102-029-065	5

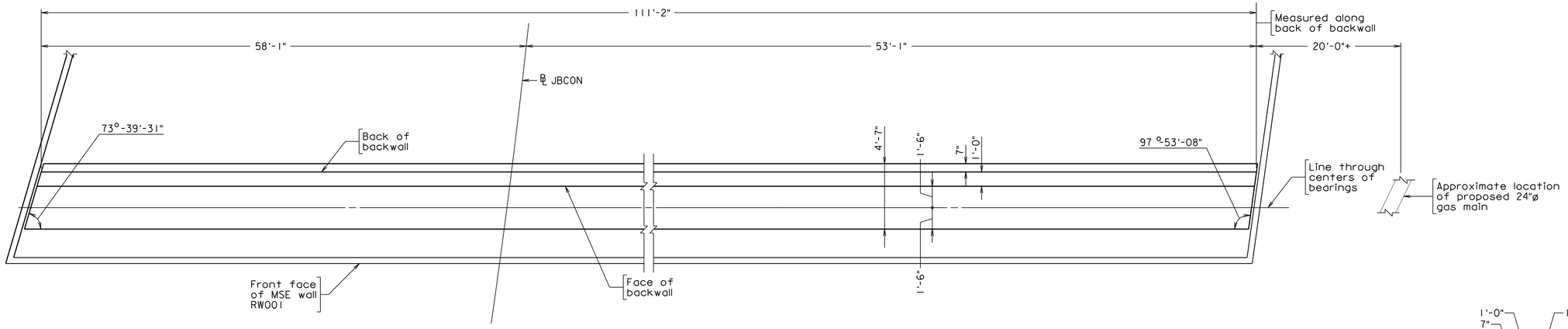

PLAN

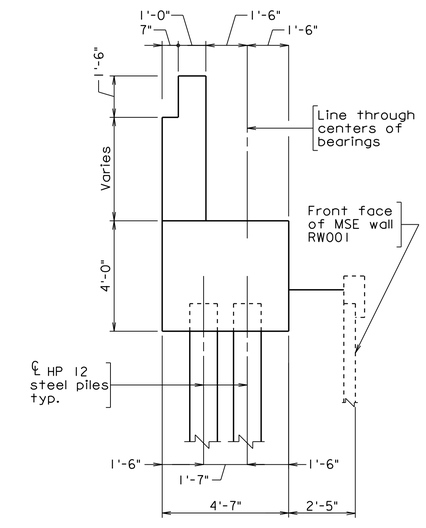

SECTION A-A
Scale 3/8" = 1'-0"

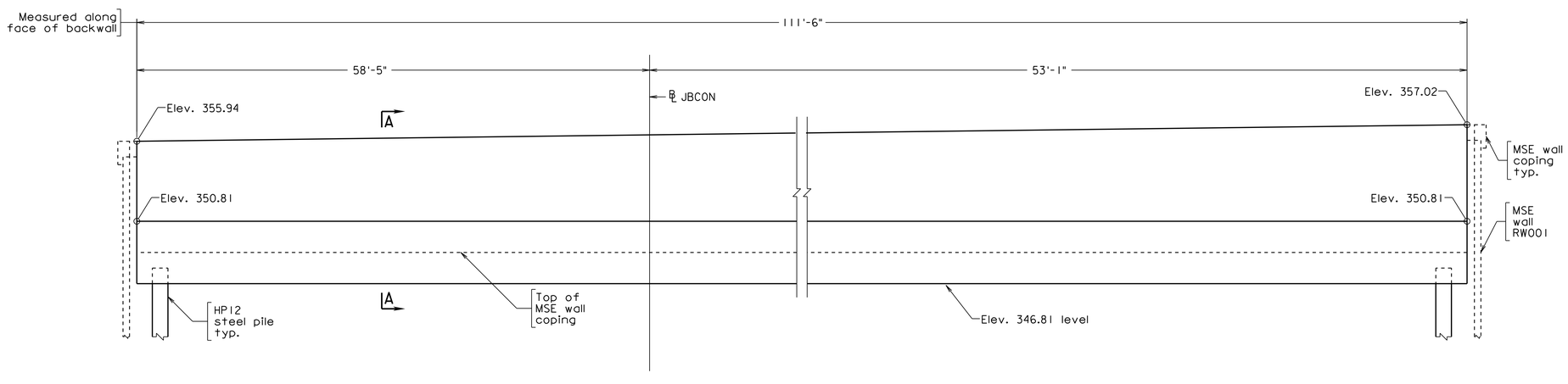

ELEVATION

PRELIMINARY PLANS

THESE PLANS ARE UNFINISHED AND ARE NOT TO BE USED FOR ANY TYPE OF CONSTRUCTION

Scale 1/4" = 1'-0"

© 2013, Commonwealth of Virginia

b07077005.dgn

RK&K
RICHMOND, VA
STRUCTURAL ENGINEER

No.	Description	Date
	Revisions	

COMMONWEALTH OF VIRGINIA
DEPARTMENT OF TRANSPORTATION

STRUCTURE AND BRIDGE DIVISION

BRIDGE NO. 2248 - ABUTMENT A
PLAN, ELEVATION AND SECTION

Designed: JAJ	Date	Plan No.	Sheet No.
Drawn: JRB	Jan. 2013		5
Checked: CSJ			

STATE	FEDERAL AID ROUTE	FEDERAL AID PROJECT	STATE ROUTE	STATE PROJECT	SHEET NO.
VA.				8102-029-065	6

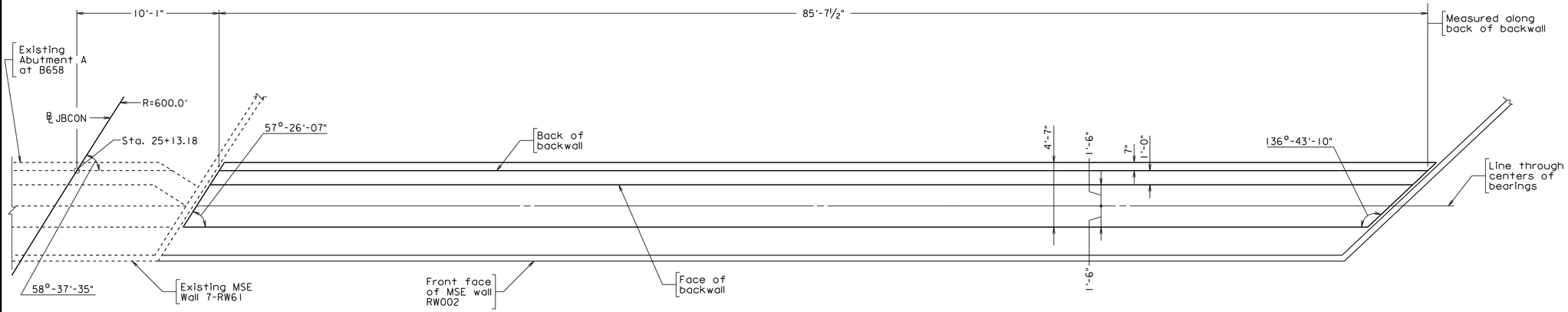

PLAN

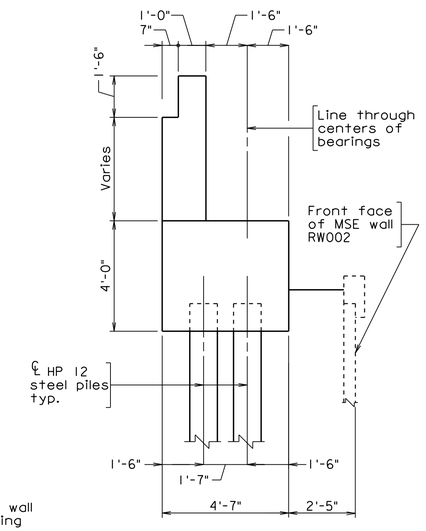

SECTION A-A
Scale ⅜" = 1'-0"

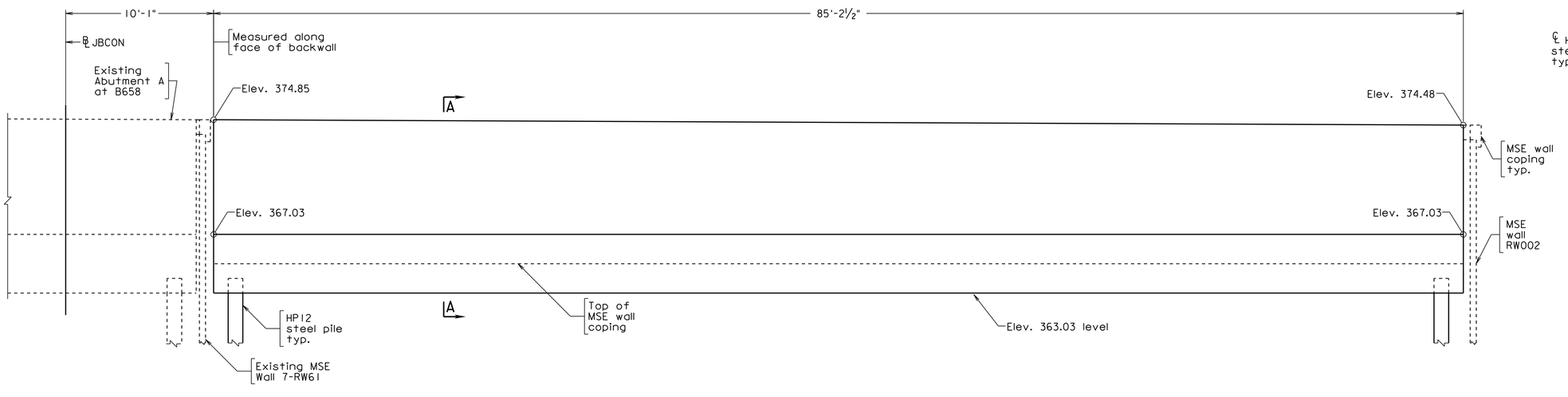

ELEVATION

PRELIMINARY PLANS

THESE PLANS ARE UNFINISHED AND ARE NOT TO BE USED FOR ANY TYPE OF CONSTRUCTION

b07077006.dgn

RK&K
RICHMOND, VA
STRUCTURAL ENGINEER

Scale ¼" = 1'-0"

© 2013, Commonwealth of Virginia

No.	Description	Date
	Revisions	

COMMONWEALTH OF VIRGINIA
DEPARTMENT OF TRANSPORTATION

STRUCTURE AND BRIDGE DIVISION

BRIDGE NO. 2248 - ABUTMENT B PLAN, ELEVATION AND SECTION

Designed: JAJ	Date	Plan No.	Sheet No.
Drawn: JRB	Jan. 2013		6
Checked: CSJ			

STATE	FEDERAL AID ROUTE	FEDERAL AID PROJECT	STATE ROUTE	STATE PROJECT	SHEET NO.
VA.	—			8102-029-065	7

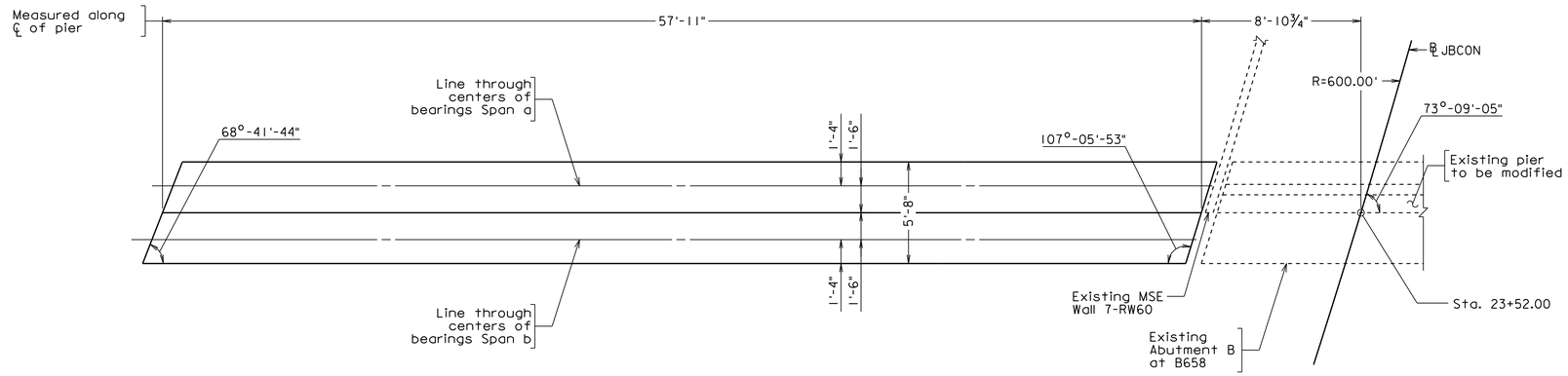

PLAN

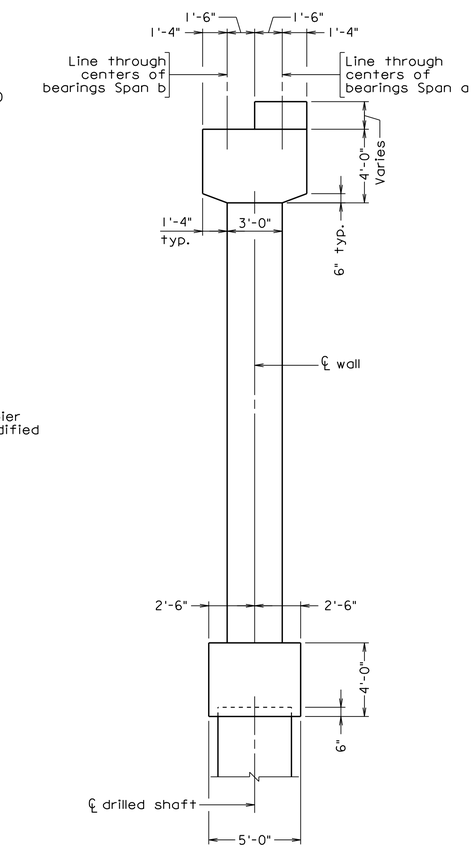

SECTION

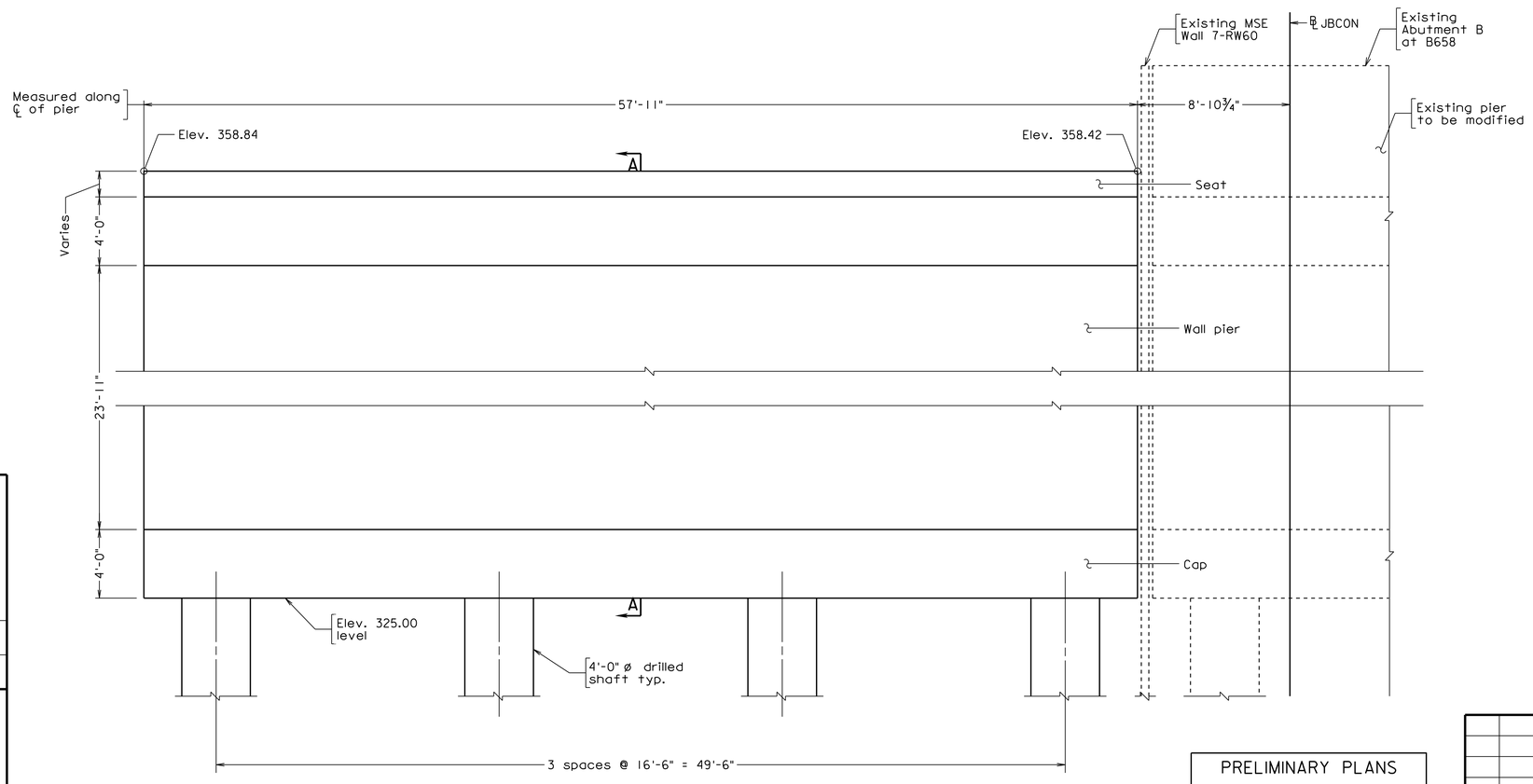

ELEVATION
(Looking downstation)

PRELIMINARY PLANS

THESE PLANS ARE UNFINISHED AND ARE NOT TO BE USED FOR ANY TYPE OF CONSTRUCTION

Scale ¼" = 1'-0"

© 2013, Commonwealth of Virginia

b07077007.dgn

RK&K
RICHMOND, VA
STRUCTURAL ENGINEER

No.	Description	Date
	Revisions	

COMMONWEALTH OF VIRGINIA
DEPARTMENT OF TRANSPORTATION

STRUCTURE AND BRIDGE DIVISION

BRIDGE NO. 2248 - PIER
PLAN, ELEVATION AND SECTION

Designed: JAJ
Drawn: JRR
Checked: RSV

Date	Plan No.	Sheet No.
Jan. 2013		7

STATE	FEDERAL AID ROUTE	FEDERAL AID PROJECT	STATE ROUTE	STATE PROJECT	SHEET NO.
VA.	—			8102-029-065	8

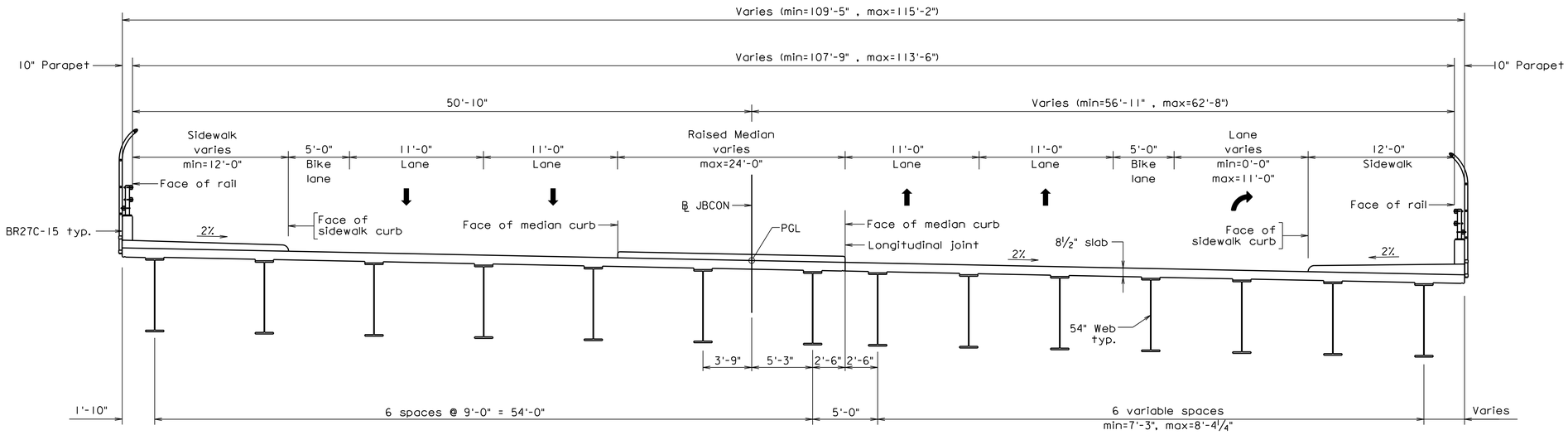

PROPOSED TRANSVERSE SECTION

b07077008.dgn

RK&K
RICHMOND, VA
STRUCTURAL ENGINEER

PRELIMINARY PLANS

THESE PLANS ARE UNFINISHED AND ARE NOT TO BE USED FOR ANY TYPE OF CONSTRUCTION

Scale 1" = 5'

© 2013, Commonwealth of Virginia

No.	Description	Date
	Revisions	

COMMONWEALTH OF VIRGINIA
DEPARTMENT OF TRANSPORTATION

STRUCTURE AND BRIDGE DIVISION

BRIDGE NO. 2248
TRANSVERSE SECTION
SPAN A

Designed: JAJ
Drawn: BJR
Checked: RRJ

Date	Plan No.	Sheet No.
Jan. 2013		8

STATE	FEDERAL AID ROUTE	FEDERAL AID PROJECT	STATE ROUTE	STATE PROJECT	SHEET NO.
VA.	—			8102-029-065	9

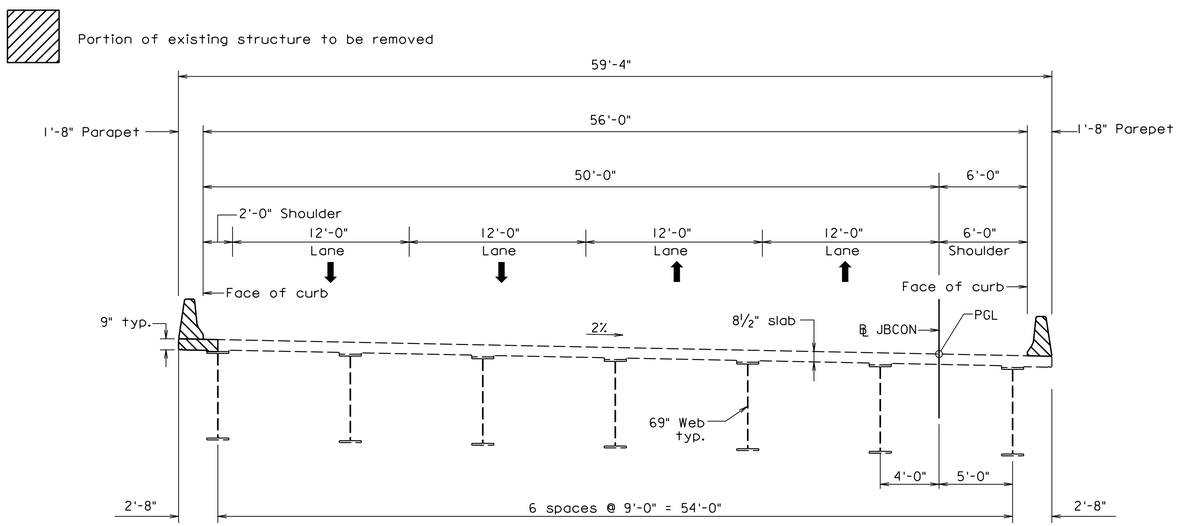

EXISTING B658 TRANSVERSE SECTION

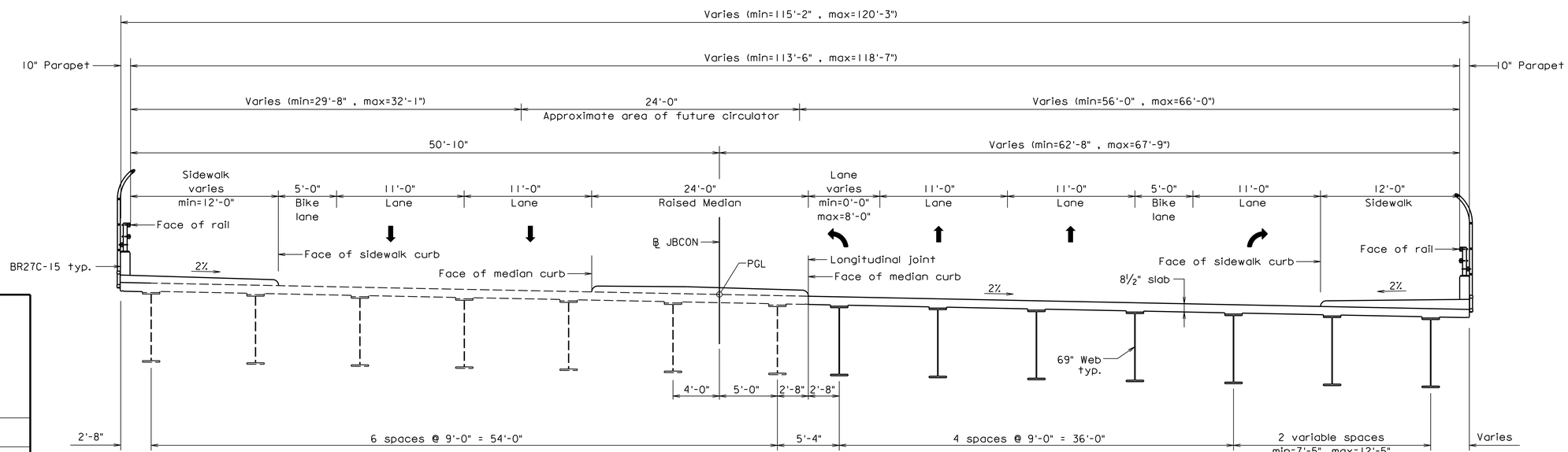

PROPOSED TRANSVERSE SECTION

PRELIMINARY PLANS

THESE PLANS ARE UNFINISHED AND ARE NOT TO BE USED FOR ANY TYPE OF CONSTRUCTION

Scale 1" = 5'

© 2013, Commonwealth of Virginia

b07077009.dgn

RK&K
RICHMOND, VA
STRUCTURAL ENGINEER

No.	Description	Date
	Revisions	

COMMONWEALTH OF VIRGINIA
DEPARTMENT OF TRANSPORTATION

STRUCTURE AND BRIDGE DIVISION

BRIDGE NO. 2248 and B658
TRANSVERSE SECTION
SPAN B

Designed: JAJ	Date	Plan No.	Sheet No.
Drawn: BHR	Jan. 2013		9
Checked: GSV			

STATE	FEDERAL AID ROUTE	FEDERAL AID PROJECT	STATE ROUTE	STATE PROJECT	SHEET NO.
VA.	—			8102-029-065	10

Notes:

B628 Width: 12'-10" sidewalk, 38'-0" roadway. Overall width 50'-10" face of rail to face of curb. Includes reconstruction of 3'-0" on left side and widening of 11'-4" on right side.

Bridge No. 2242 Width: 24'-0" median, 49'-0" roadway, 12'-0" sidewalk. Overall width 85'-0".

Span layout: 130'-0" steel plate girder span.

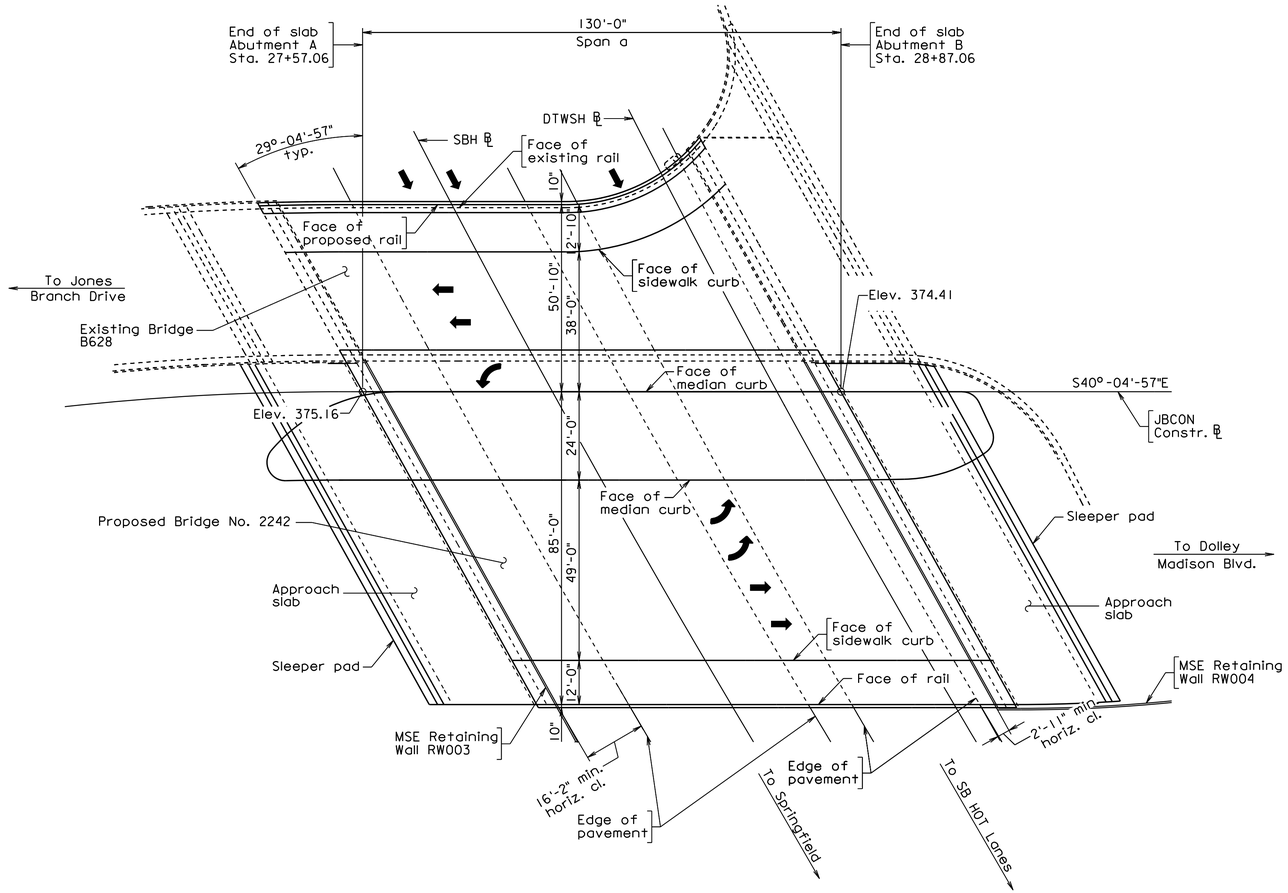

PLAN

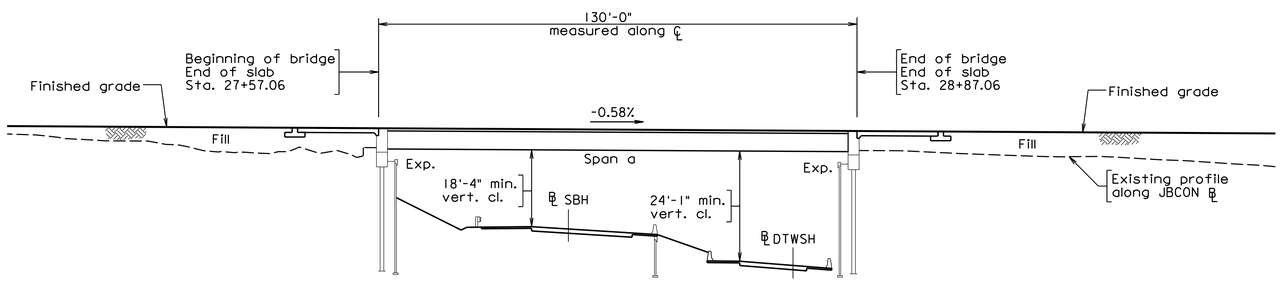

ABUTMENT A

ABUTMENT B

DEVELOPED SECTION ALONG ℄

PRELIMINARY PLANS

THESE PLANS ARE UNFINISHED AND ARE NOT TO BE USED FOR ANY TYPE OF CONSTRUCTION

Scale 1" = 20'

© 2013, Commonwealth of Virginia

b070770 10.dgn

RK&K
RICHMOND, VA
STRUCTURAL ENGINEER

No.	Description	Date
	Revisions	

COMMONWEALTH OF VIRGINIA
DEPARTMENT OF TRANSPORTATION

STRUCTURE AND BRIDGE DIVISION

BRIDGE NO. 2242 and B628
GENERAL PLAN AND
ELEVATION

Designed: JAJ Drawn: JBB Checked: GSJ	Date	Plan No.	Sheet No.
	Jan. 2013		10

STATE	FEDERAL AID ROUTE	FEDERAL AID PROJECT	STATE ROUTE	STATE PROJECT	SHEET NO.
VA.	—			8102-029-065	11

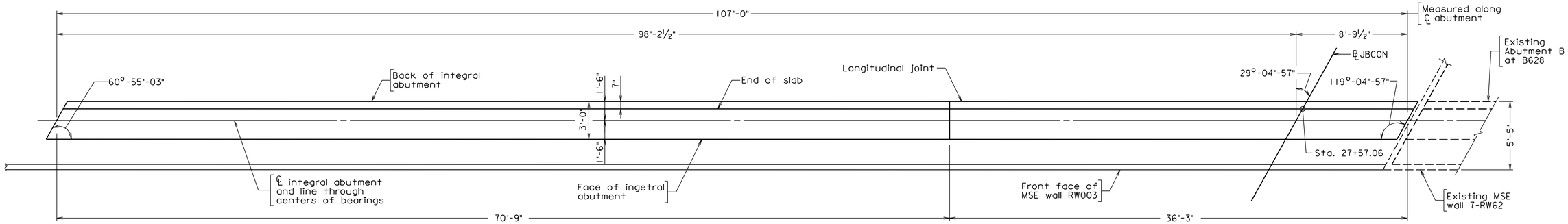

PLAN

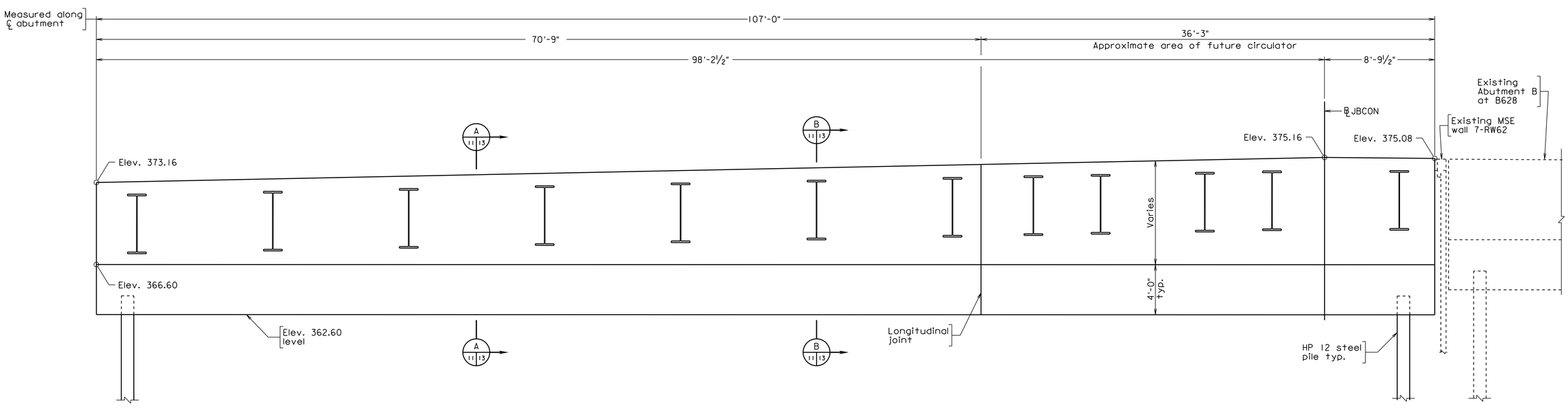

ELEVATION

b070770 11.dgn

RK&K
RICHMOND, VA
STRUCTURAL ENGINEER

PRELIMINARY PLANS

THESE PLANS ARE UNFINISHED AND ARE NOT TO BE USED FOR ANY TYPE OF CONSTRUCTION

Scale ¼" = 1'-0"

© 2013, Commonwealth of Virginia

No.	Description	Date
	Revisions	

COMMONWEALTH OF VIRGINIA
DEPARTMENT OF TRANSPORTATION

STRUCTURE AND BRIDGE DIVISION

BRIDGE NO. 2242 ABUTMENT A PLAN AND ELEVATION

Designed: JAJ	Date	Plan No.	Sheet No.
Drawn: JRB	Jan. 2013		11
Checked: GSJ			

STATE	FEDERAL AID ROUTE	FEDERAL AID PROJECT	STATE ROUTE	STATE PROJECT	SHEET NO.
VA.	—			8102-029-065	12

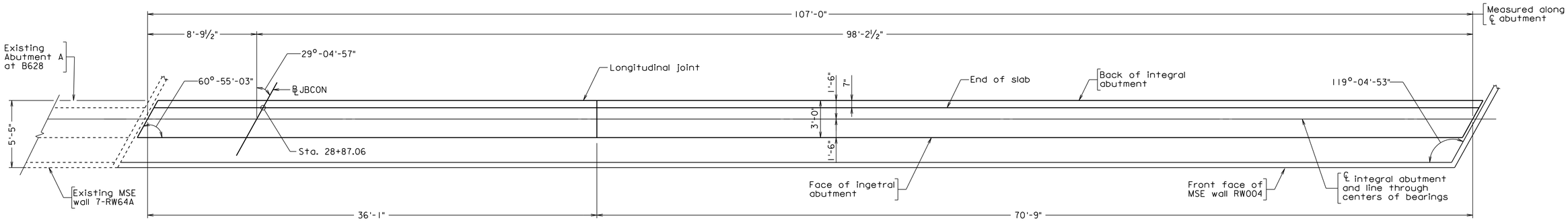

PLAN

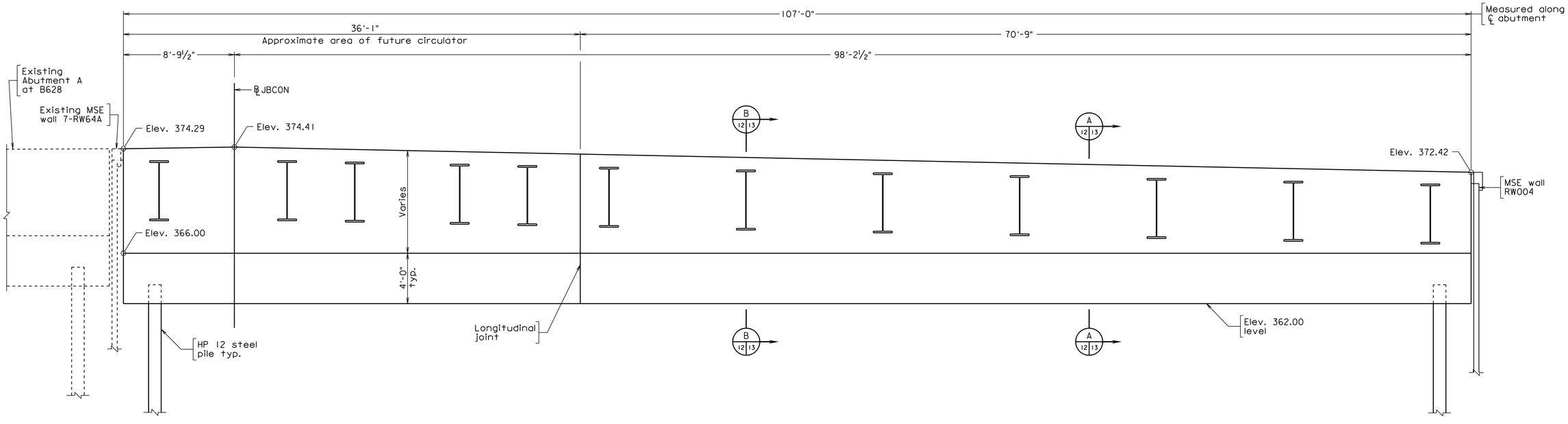

ELEVATION

b070770 12.dgn

PRELIMINARY PLANS

THESE PLANS ARE UNFINISHED AND ARE NOT TO BE USED FOR ANY TYPE OF CONSTRUCTION

RK&K
RICHMOND, VA
STRUCTURAL ENGINEER

Scale ¼" = 1'-0"

© 2013, Commonwealth of Virginia

No.	Description	Date
	Revisions	

COMMONWEALTH OF VIRGINIA
DEPARTMENT OF TRANSPORTATION

STRUCTURE AND BRIDGE DIVISION

BRIDGE NO. 2242
ABUTMENT B PLAN
AND ELEVATION

Designed: JAJ	Date	Plan No.	Sheet No.
Drawn: JBR	Jan. 2013		12
Checked: GSJ			

STATE	FEDERAL AID ROUTE	FEDERAL AID PROJECT	STATE ROUTE	STATE PROJECT	SHEET NO.
VA.	—			8102-029-065	13

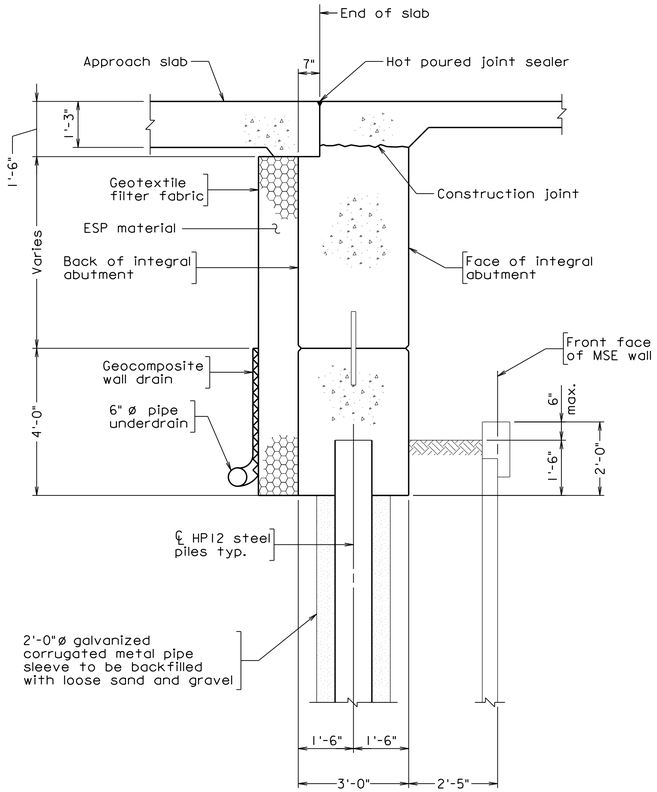

SECTION A

Between girders

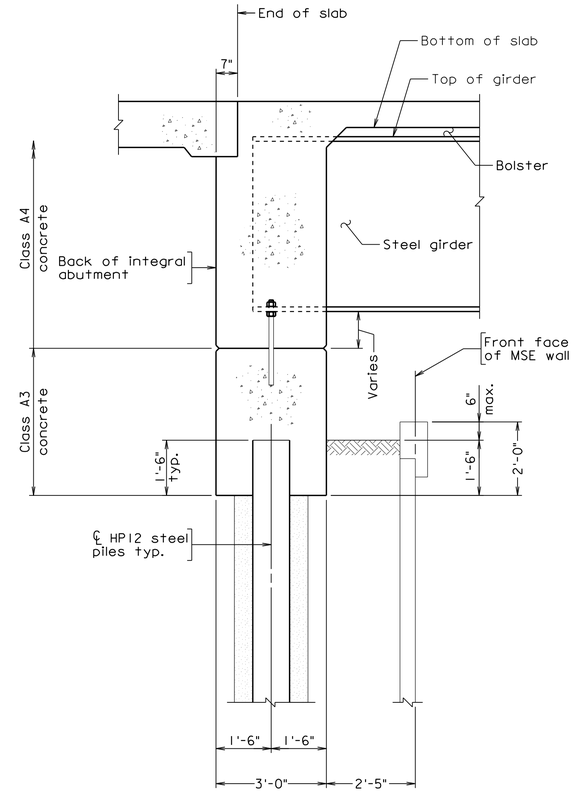

SECTION B

At girders
For details not shown, see Section A

b0707013.dgn

RK&K
RICHMOND, VA
STRUCTURAL ENGINEER

PRELIMINARY PLANS

THESE PLANS ARE UNFINISHED AND ARE NOT TO BE USED FOR ANY TYPE OF CONSTRUCTION

Scale ½" = 1'-0"

© 2013, Commonwealth of Virginia

No.	Description	Date
	Revisions	

COMMONWEALTH OF VIRGINIA
DEPARTMENT OF TRANSPORTATION

STRUCTURE AND BRIDGE DIVISION

BRIDGE NO. 2242
TYPICAL ABUTMENT SECTIONS

Designed: JAJ	Date	Plan No.	Sheet No.
Drawn: JRB	Jan. 2013		13
Checked: GSV			

STATE	FEDERAL AID ROUTE	FEDERAL AID PROJECT	STATE ROUTE	STATE PROJECT	SHEET NO.
VA.	—			8102-029-065	14

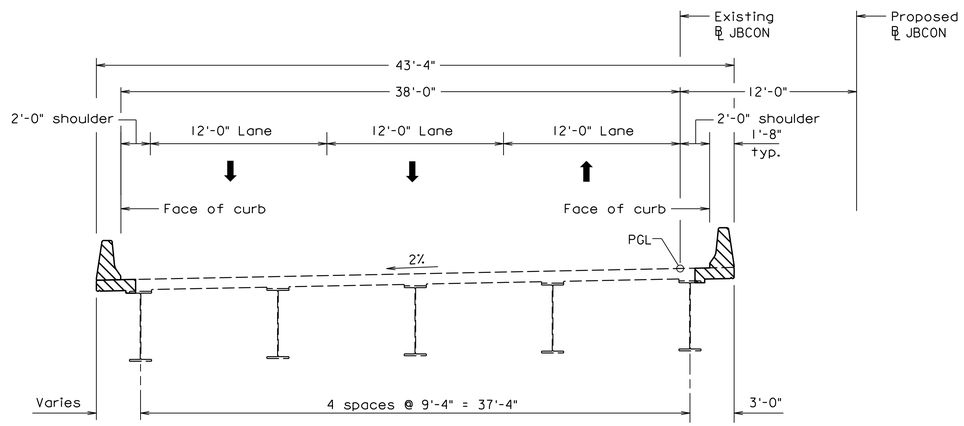

Portion of existing structure to be removed

EXISTING B628 TRANSVERSE SECTION

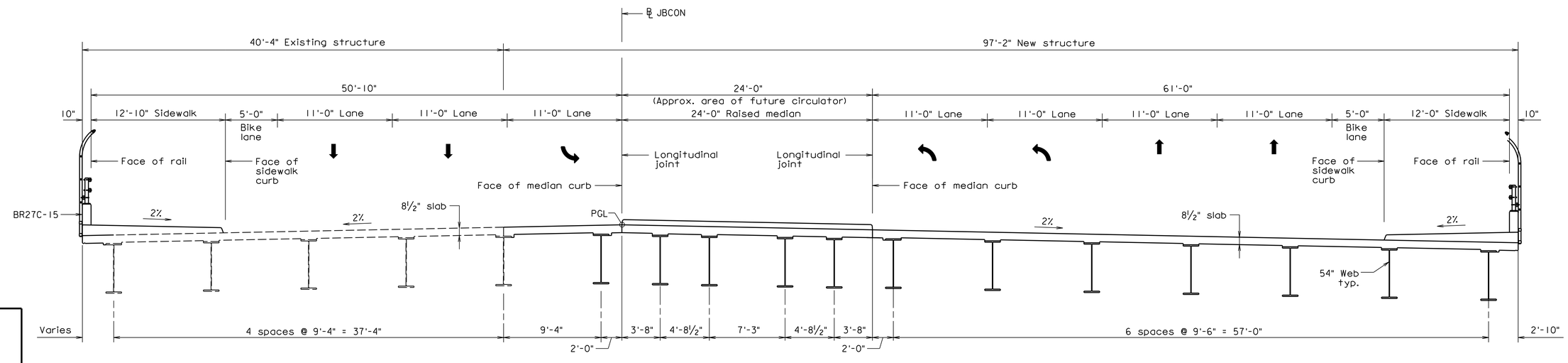

PROPOSED TRANSVERSE SECTION

b0707014.dgn

RK&K
RICHMOND, VA
STRUCTURAL ENGINEER

PRELIMINARY PLANS

THESE PLANS ARE UNFINISHED AND ARE NOT TO BE USED FOR ANY TYPE OF CONSTRUCTION

Scale 1" = 5'

© 2013, Commonwealth of Virginia

No.	Description	Date
	Revisions	

COMMONWEALTH OF VIRGINIA
DEPARTMENT OF TRANSPORTATION

STRUCTURE AND BRIDGE DIVISION

BRIDGE NO. 2242 AND B628 TRANSVERSE SECTION

Designed: BHR	Date	Plan No.	Sheet No.
Drawn: JBR Checked: GSJ	Jan. 2013		14

STATE	FEDERAL AID ROUTE	FEDERAL AID PROJECT	STATE ROUTE	STATE PROJECT	SHEET NO.
VA.	—			8102-029-085	15

Notes:

Width: 12'-0" sidewalk, roadway varies (min=27'-0", max=51'-1"), median varies (min=24'-5", max=26'-7"), roadway varies (min=28'-0", max=49'-0"), 12'-0" sidewalk. Over-all width varies from 106'-2" to 135'-2" face-to-face of rails.

Span layout: 1 unit of 108.5' steel plate girder span; 1 unit of 143' - 142' continuous steel plate girder spans.

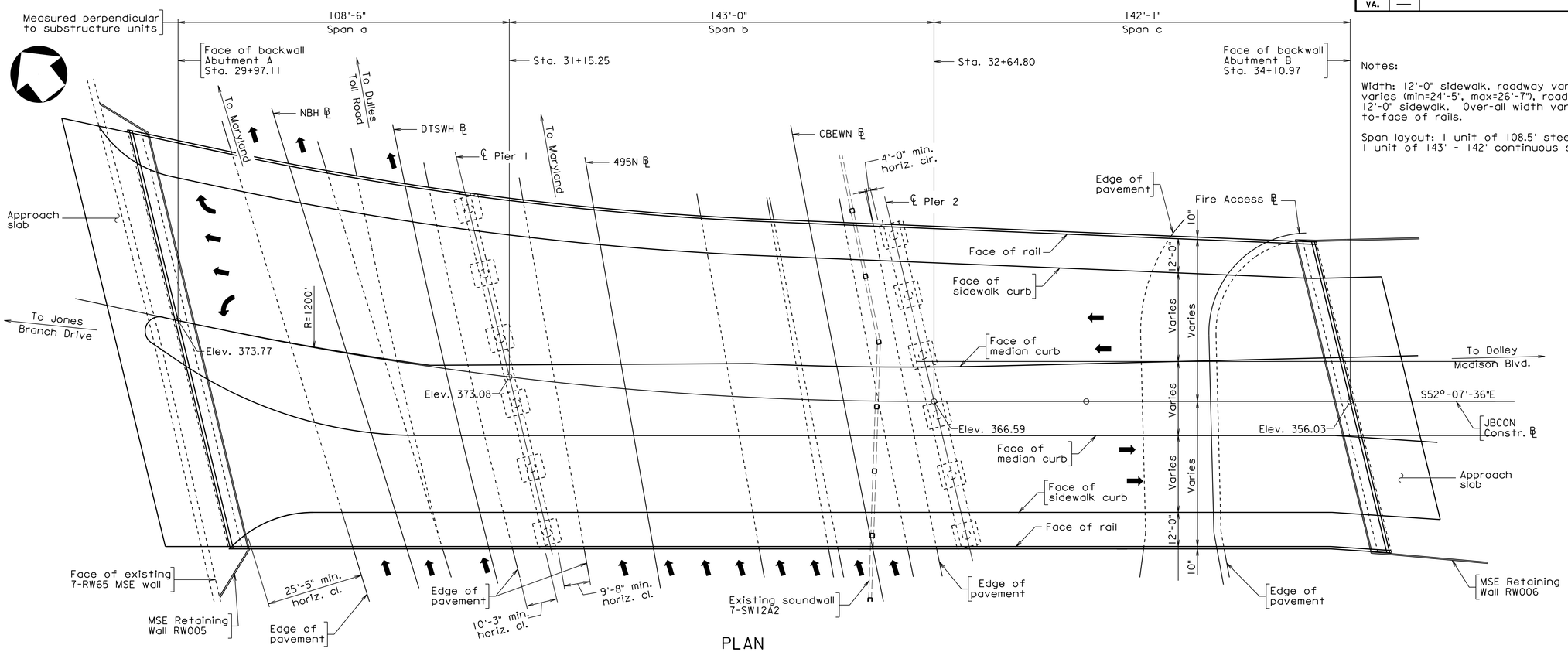

PLAN

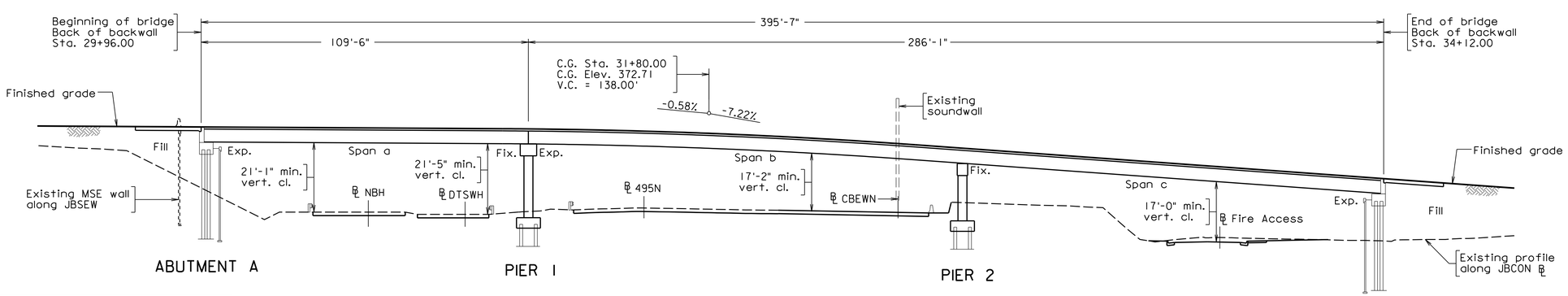

ELEVATION

• Shown perpendicular to substructure units

PRELIMINARY PLANS

THESE PLANS ARE UNFINISHED AND ARE NOT TO BE USED FOR ANY TYPE OF CONSTRUCTION

Scale 1" = 20'

© 2013, Commonwealth of Virginia

No.	Description	Date
	Revisions	

COMMONWEALTH OF VIRGINIA
DEPARTMENT OF TRANSPORTATION

STRUCTURE AND BRIDGE DIVISION

BRIDGE NO. 2902
GENERAL PLAN AND ELEVATION

Designed: JAJ	Date	Plan No.	Sheet No.
Drawn: JRB	Jan. 2013		15
Checked: GSJ			

RK&K
RICHMOND, VA
STRUCTURAL ENGINEER

b0707701 5.dgn

STATE	FEDERAL AID ROUTE	FEDERAL AID PROJECT	STATE ROUTE	STATE PROJECT	SHEET NO.
VA.	—			8102-029-065	16

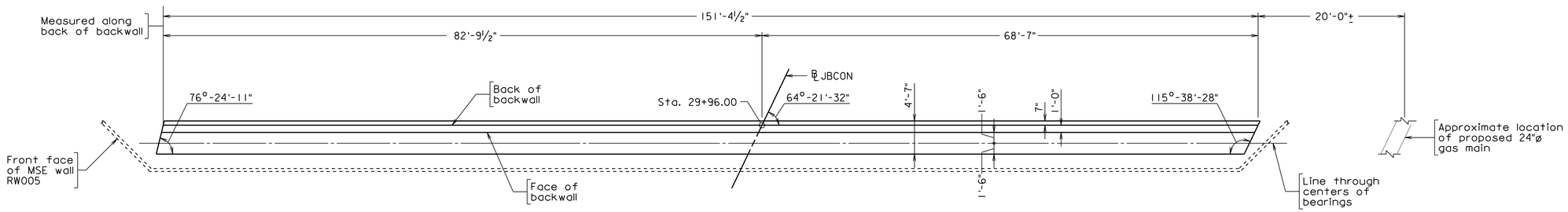

PLAN

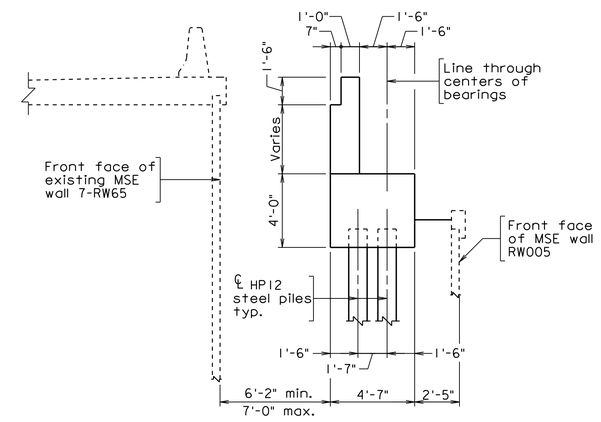

SECTION A-A
Scale ¼" = 1'-0"

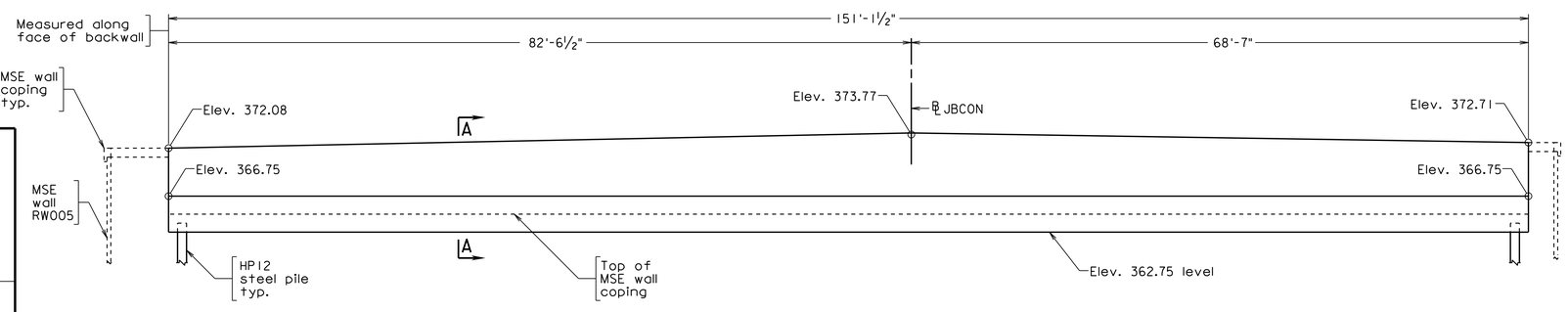

ELEVATION

PRELIMINARY PLANS

THESE PLANS ARE UNFINISHED AND ARE NOT TO BE USED FOR ANY TYPE OF CONSTRUCTION

Scale ⅛" = 1'-0"

© 2013, Commonwealth of Virginia

b0707016.dgn

RK&K
RICHMOND, VA
STRUCTURAL ENGINEER

No.	Description	Date
	Revisions	

COMMONWEALTH OF VIRGINIA
DEPARTMENT OF TRANSPORTATION

STRUCTURE AND BRIDGE DIVISION

BRIDGE NO. 2902 - ABUTMENT A
PLAN, ELEVATION AND SECTION

Designed: JAJ	Date	Plan No.	Sheet No.
Drawn: JBR	Jan. 2013		16
Checked: GAJ			

STATE	FEDERAL AID ROUTE	FEDERAL AID PROJECT	STATE ROUTE	STATE PROJECT	SHEET NO.
VA.				8102-029-065	17

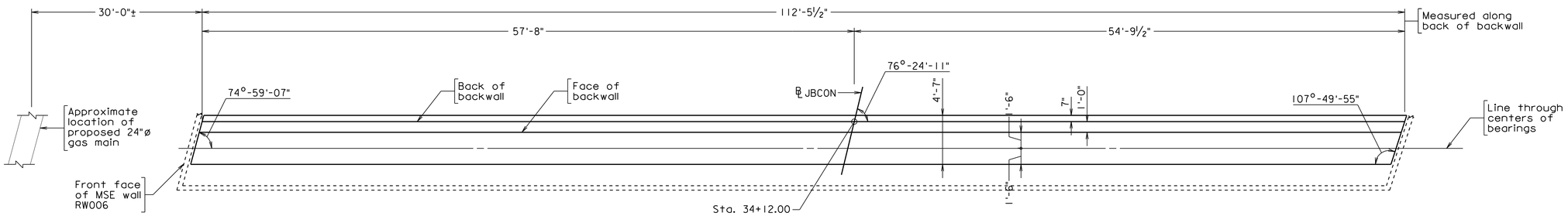

PLAN

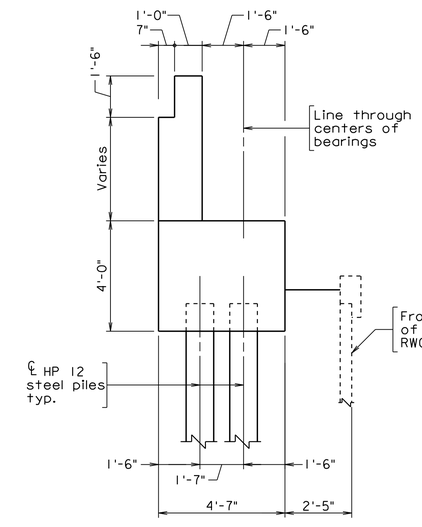

SECTION A-A

Scale ⅜" = 1'-0"

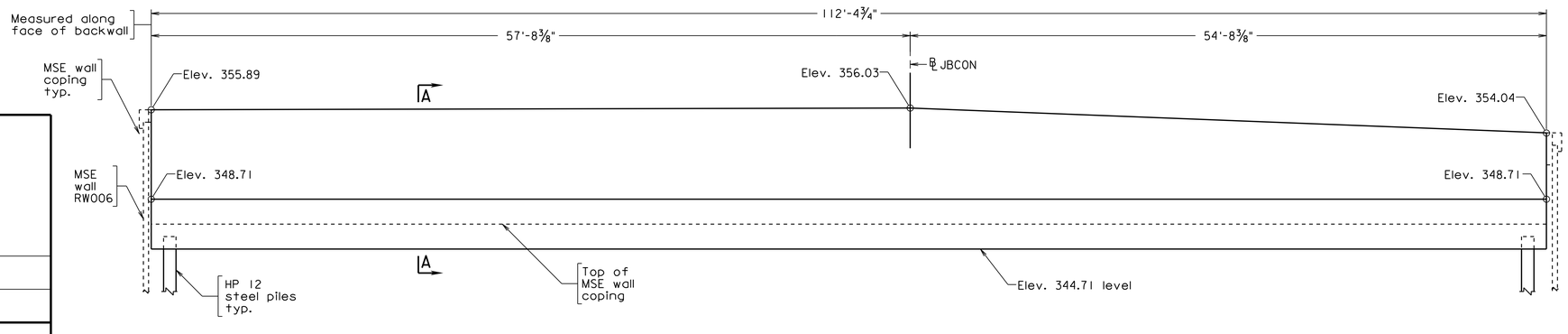

ELEVATION

PRELIMINARY PLANS

THESE PLANS ARE UNFINISHED AND ARE NOT TO BE USED FOR ANY TYPE OF CONSTRUCTION

Not to scale, unless otherwise noted

© 2013, Commonwealth of Virginia

No.	Description	Date
	Revisions	

COMMONWEALTH OF VIRGINIA
DEPARTMENT OF TRANSPORTATION

STRUCTURE AND BRIDGE DIVISION

BRIDGE NO. 2902 - ABUTMENT B
PLAN, ELEVATION AND SECTION

Designed: JAJ Drawn: JRB Checked: GSJ	Date	Plan No.	Sheet No.
	Jan. 2013		17

RK&K
RICHMOND, VA
STRUCTURAL ENGINEER

b0707017.dgn

STATE	FEDERAL AID ROUTE	FEDERAL AID PROJECT	STATE ROUTE	STATE PROJECT	SHEET NO.
VA.	—			8102-029-065	18

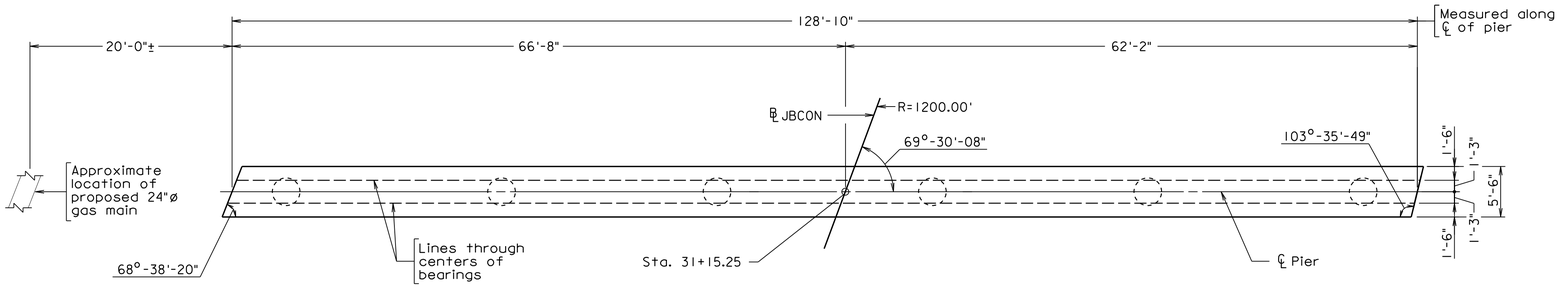

PLAN OF CAP

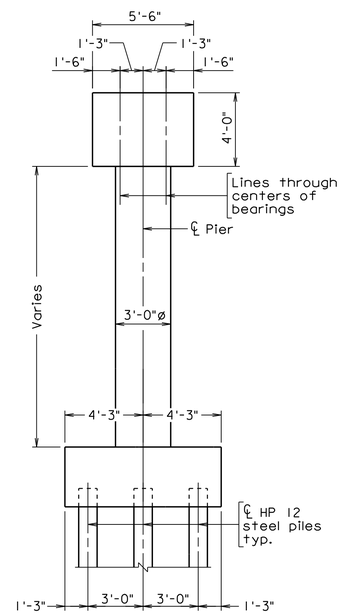

SECTION
Scale 1/4" = 1'-0"

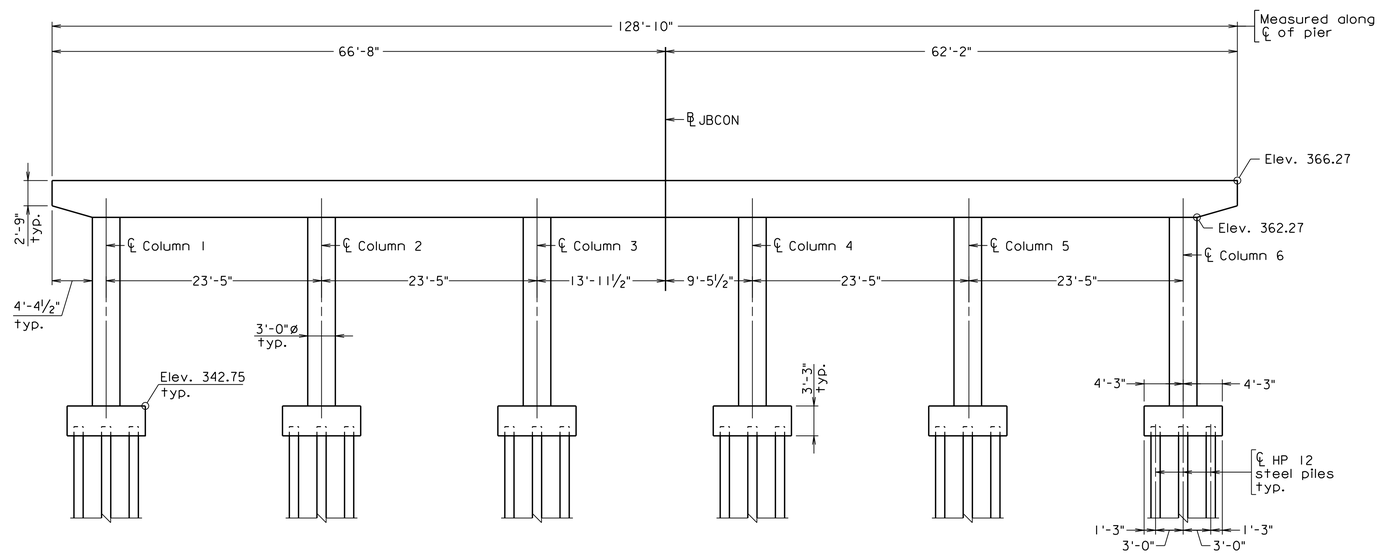

ELEVATION

Scale 1/8" = 1'-0"

© 2013, Commonwealth of Virginia

PRELIMINARY PLANS

THESE PLANS ARE UNFINISHED AND ARE NOT TO BE USED FOR ANY TYPE OF CONSTRUCTION

b0707018.dgn

RK&K
RICHMOND, VA
STRUCTURAL ENGINEER

No.	Description	Date
	Revisions	

COMMONWEALTH OF VIRGINIA
DEPARTMENT OF TRANSPORTATION

STRUCTURE AND BRIDGE DIVISION

BRIDGE NO. 2902 - PIER 1
PLAN, ELEVATION AND SECTION

Designed: JAJ
Drawn: JRR
Checked: RAY

Date	Plan No.	Sheet No.
Jan. 2013		18

STATE	FEDERAL AID ROUTE	FEDERAL AID PROJECT	STATE ROUTE	STATE PROJECT	SHEET NO.
VA.	—			8102-029-065	19

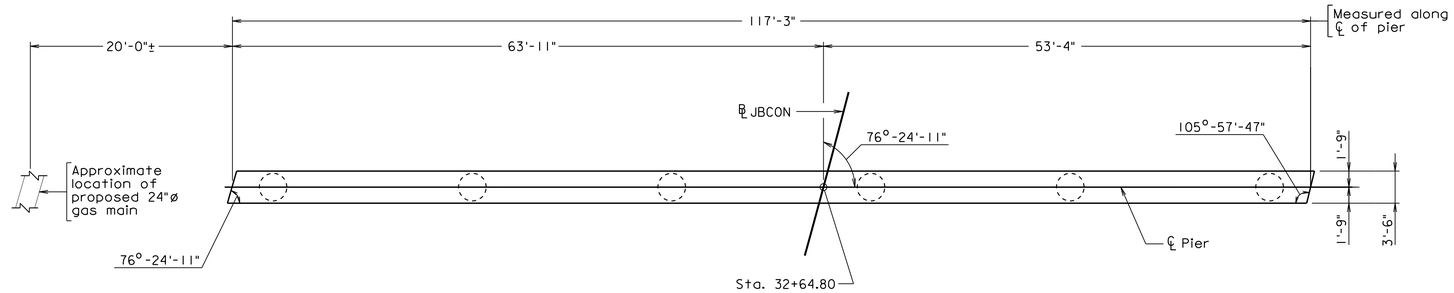

PLAN OF CAP

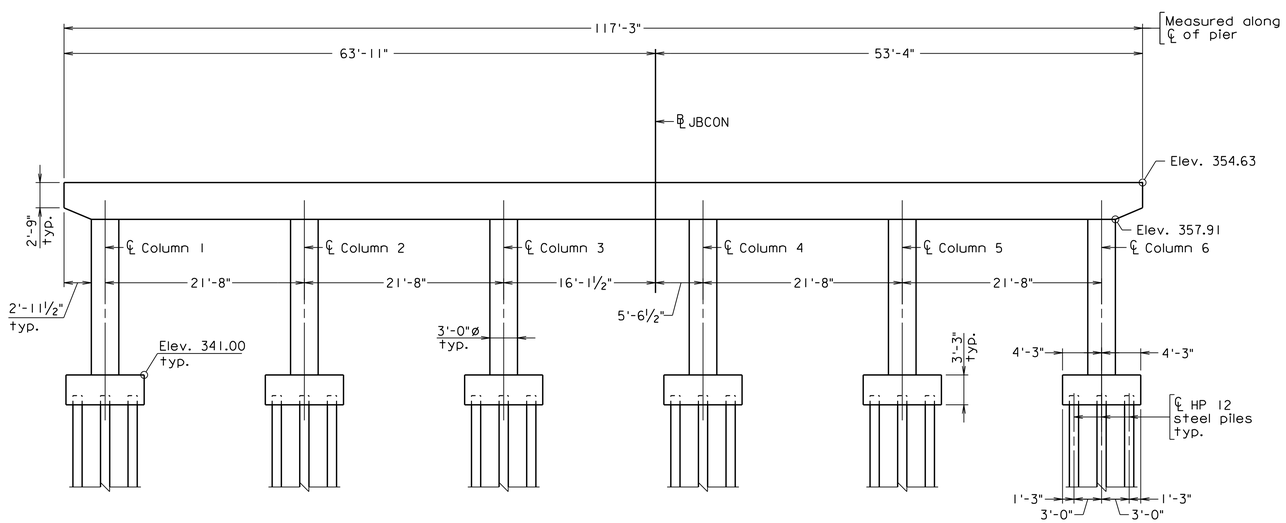

ELEVATION

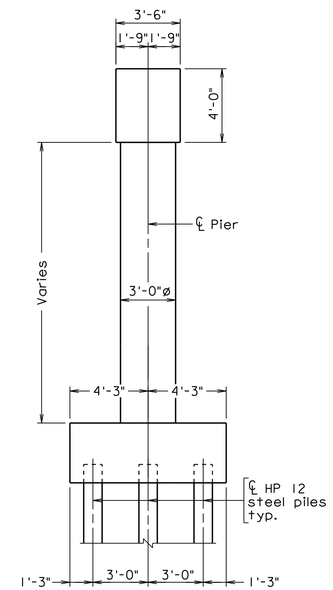

SECTION
Scale ¼" = 1'-0"

PRELIMINARY PLANS

THESE PLANS ARE UNFINISHED AND ARE NOT TO BE USED FOR ANY TYPE OF CONSTRUCTION

Scale ⅛" = 1'-0"

© 2013, Commonwealth of Virginia

b0707019.dgn

RK&K
RICHMOND, VA
STRUCTURAL ENGINEER

No.	Description	Date
	Revisions	

COMMONWEALTH OF VIRGINIA
DEPARTMENT OF TRANSPORTATION

STRUCTURE AND BRIDGE DIVISION

BRIDGE NO. 2902 - PIER 2
PLAN, ELEVATION AND SECTION

Designed: JAJ
Drawn: JRB
Checked: RRJ

Date	Plan No.	Sheet No.
Jan. 2013		19

STATE	FEDERAL AID ROUTE	FEDERAL AID PROJECT	STATE ROUTE	STATE PROJECT	SHEET NO.
VA.	—			8102-029-065	20

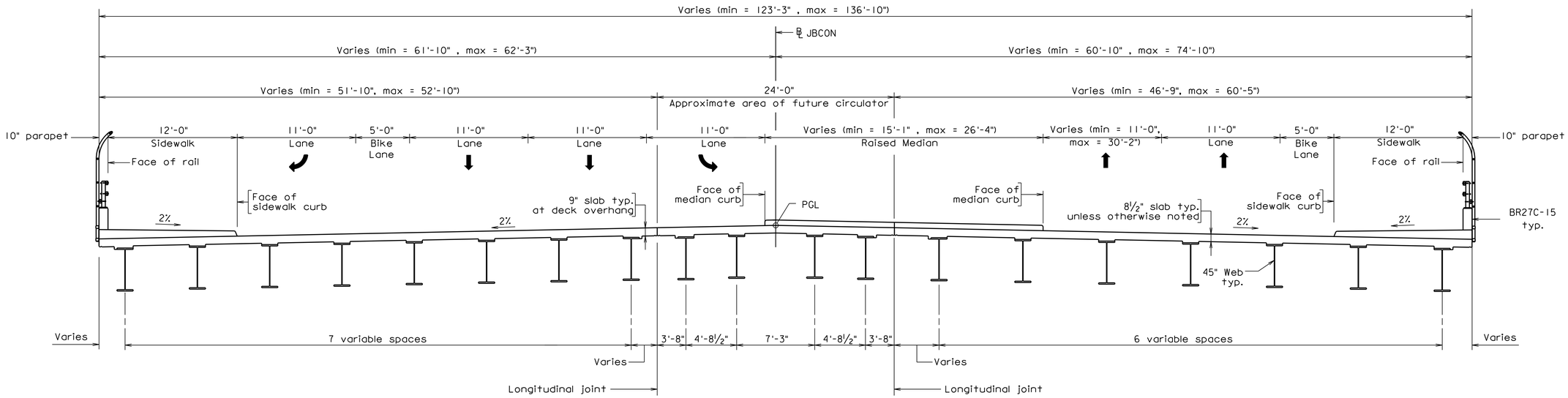

TRANSVERSE SECTION
SPAN A

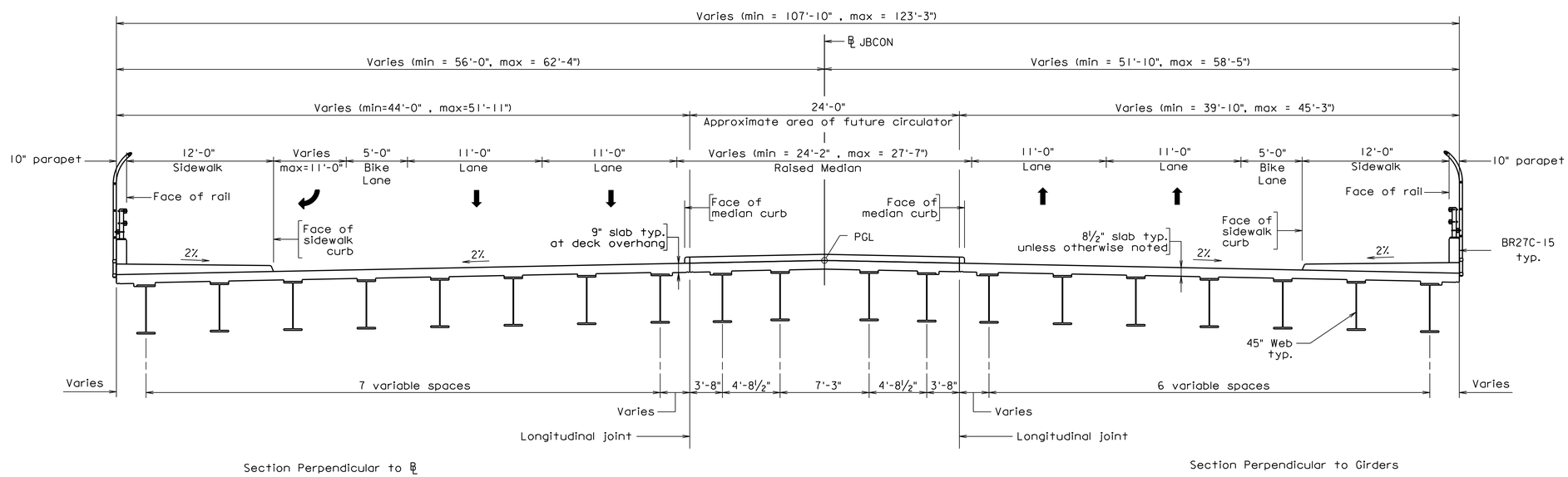

Section Perpendicular to ℄

Section Perpendicular to Girders

TRANSVERSE SECTION
SPANS B AND C

PRELIMINARY PLANS

THESE PLANS ARE UNFINISHED AND ARE NOT TO BE USED FOR ANY TYPE OF CONSTRUCTION

Scale 1" = 5'

©2013, Commonwealth of Virginia

b07077020.dgn

RK&K
RICHMOND, VA
STRUCTURAL ENGINEER

No.	Description	Date
	Revisions	

COMMONWEALTH OF VIRGINIA
DEPARTMENT OF TRANSPORTATION

STRUCTURE AND BRIDGE DIVISION

BRIDGE NO. 2902
TRANSVERSE SECTION

Designed: JAJ / Drawn: JBR / Checked: GSJ	Date	Plan No.	Sheet No.
	Jan. 2013		20

STATE	FEDERAL AID ROUTE	FEDERAL AID PROJECT	STATE ROUTE	STATE PROJECT	SHEET NO.
VA.	—			8102-029-065	21

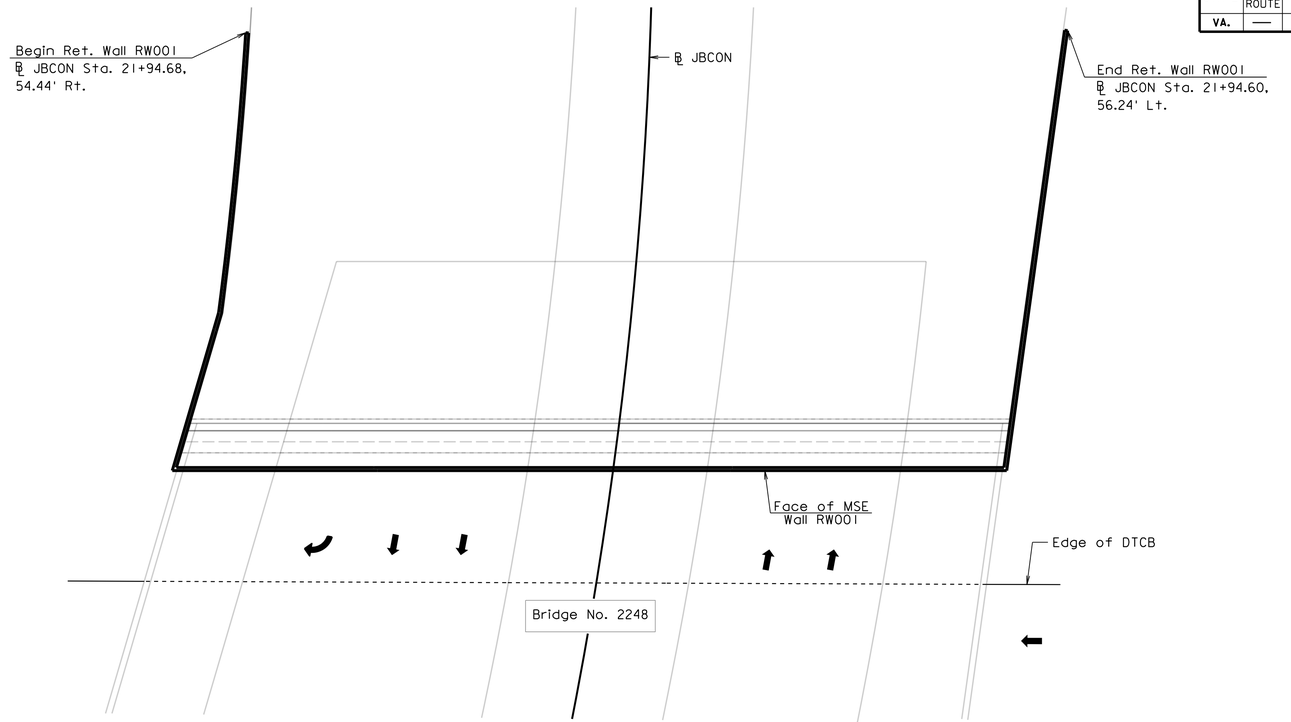

PLAN

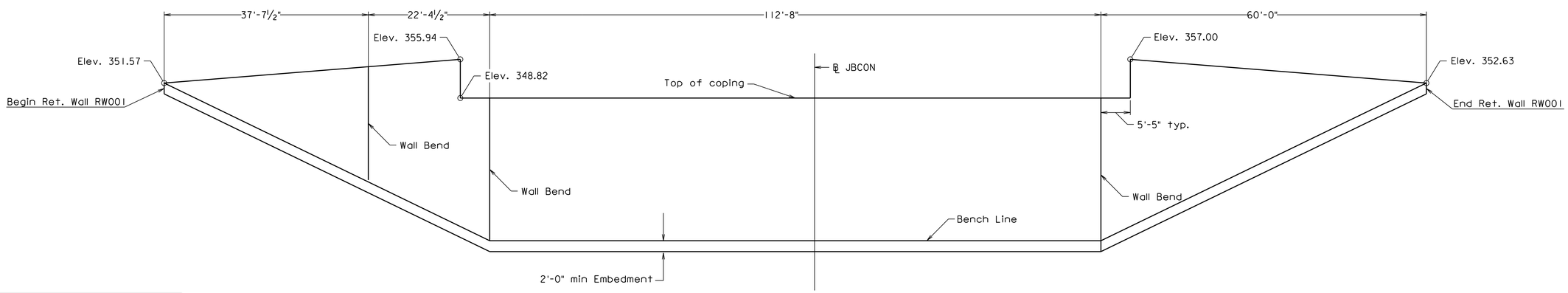

ELEVATION

PRELIMINARY PLANS

THESE PLANS ARE UNFINISHED AND ARE NOT TO BE USED FOR ANY TYPE OF CONSTRUCTION

Scale 1" = 10'

© 2013, Commonwealth of Virginia

b07077021.dgn

RK&K
RICHMOND, VA
STRUCTURAL ENGINEER

No.	Description	Date
	Revisions	

COMMONWEALTH OF VIRGINIA
DEPARTMENT OF TRANSPORTATION

STRUCTURE AND BRIDGE DIVISION

RETAINING WALL RW001 PLAN AND ELEVATION

Designed: BHR	Date	Plan No.	Sheet No.
Drawn: BHR			
Checked: RRR	Jan. 2013		21

STATE	FEDERAL AID ROUTE	FEDERAL AID PROJECT	STATE ROUTE	STATE PROJECT	SHEET NO.
VA.	—			8102-029-065	22

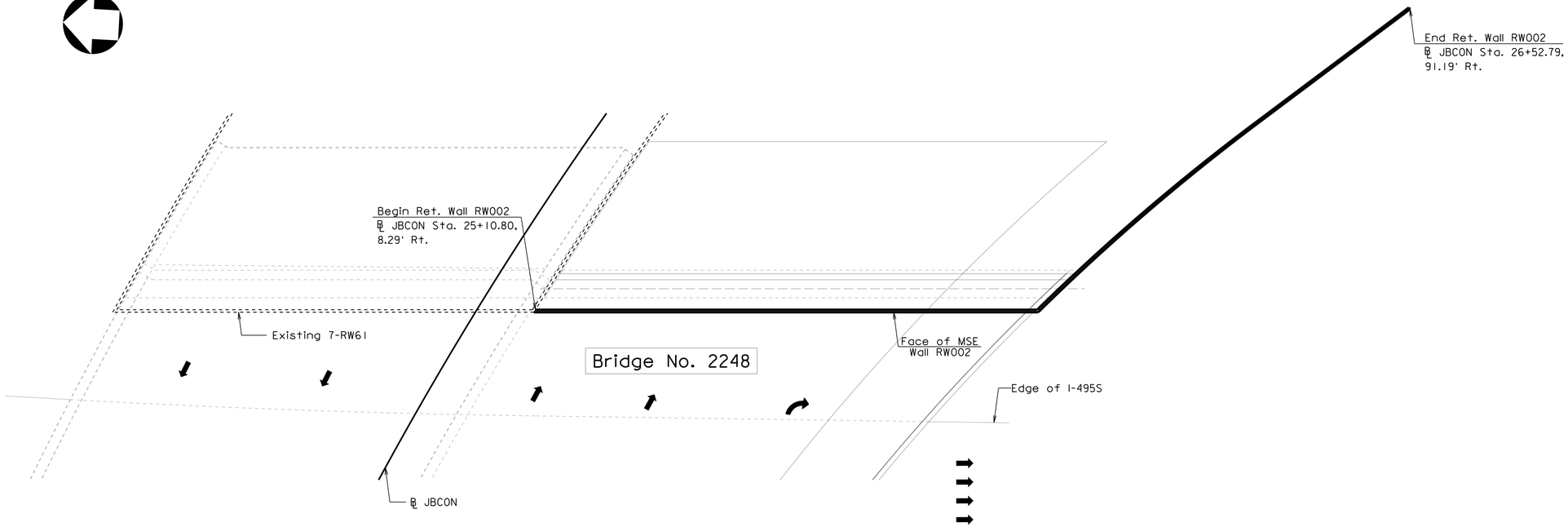

PLAN

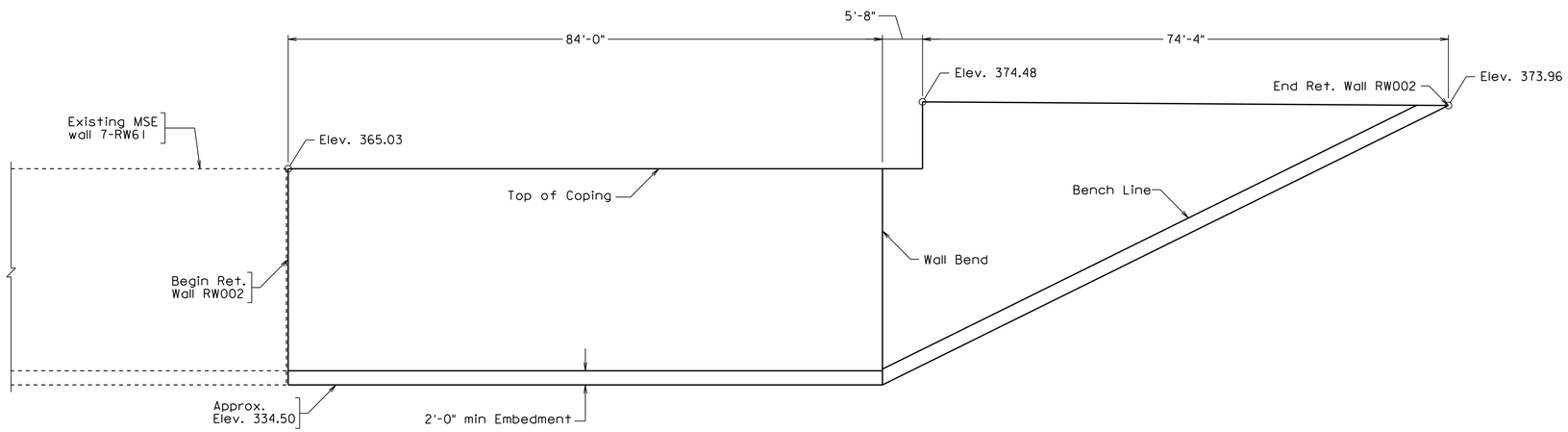

ELEVATION

PRELIMINARY PLANS

THESE PLANS ARE UNFINISHED AND ARE NOT TO BE USED FOR ANY TYPE OF CONSTRUCTION

Scale 1" = 10'

© 2013, Commonwealth of Virginia

b07077022.dgn

RK&K
RICHMOND, VA
STRUCTURAL ENGINEER

No.	Description	Date
	Revisions	

COMMONWEALTH OF VIRGINIA
DEPARTMENT OF TRANSPORTATION

STRUCTURE AND BRIDGE DIVISION

RETAINING WALL RW002
PLAN AND ELEVATION

Designed: BHR	Date	Plan No.	Sheet No.
Drawn: BHR	Jan. 2013		22
Checked: RRR			

STATE	FEDERAL AID ROUTE	FEDERAL AID PROJECT	STATE ROUTE	STATE PROJECT	SHEET NO.
VA.	—			8102-029-065	23

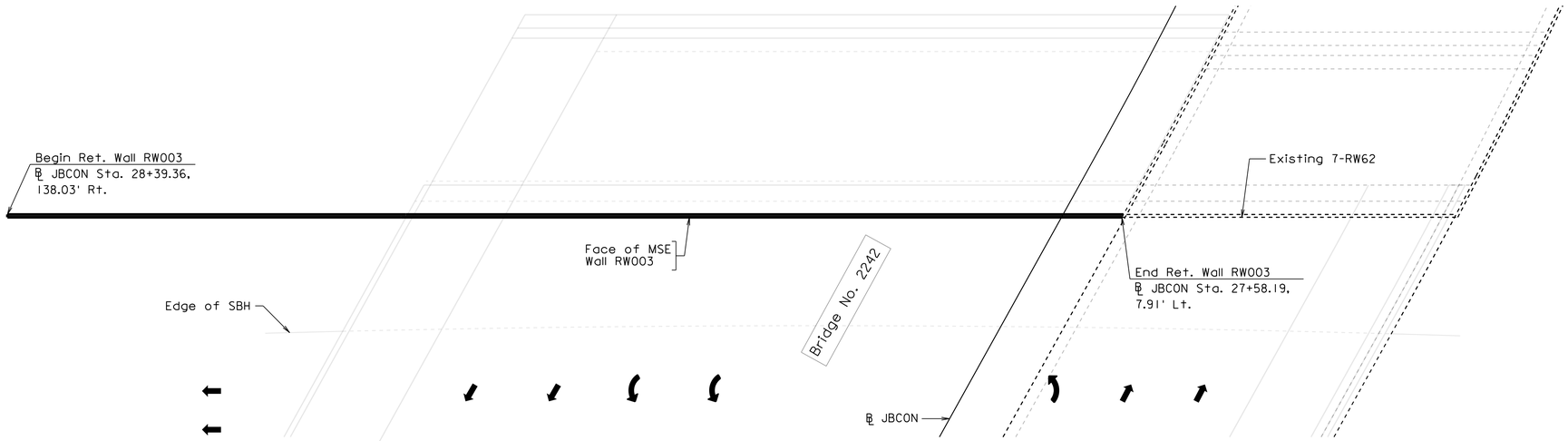

PLAN

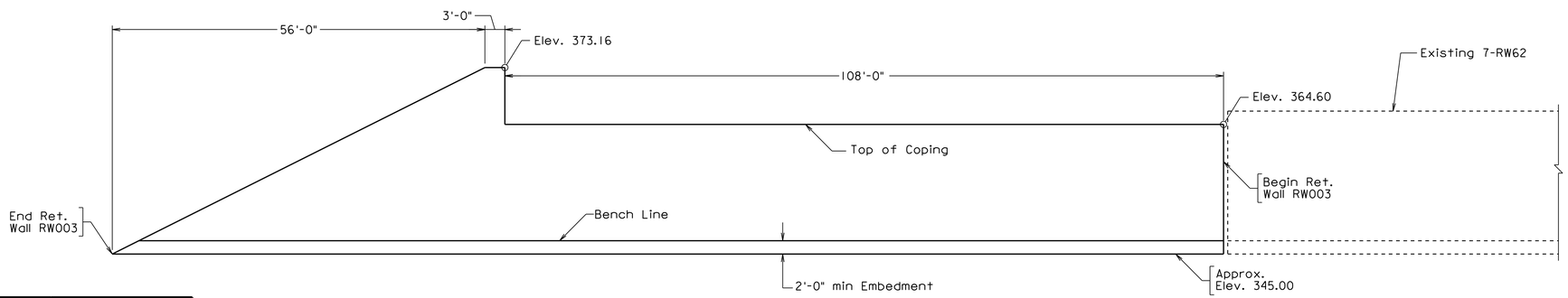

ELEVATION

PRELIMINARY PLANS

THESE PLANS ARE UNFINISHED AND ARE NOT TO BE USED FOR ANY TYPE OF CONSTRUCTION

Scale 1" = 10'

© 2013, Commonwealth of Virginia

RK&K
RICHMOND, VA
STRUCTURAL ENGINEER

No.	Description	Date
	Revisions	

COMMONWEALTH OF VIRGINIA
DEPARTMENT OF TRANSPORTATION

STRUCTURE AND BRIDGE DIVISION

RETAINING WALL RW003
PLAN AND ELEVATION

Designed: BHR	Date	Plan No.	Sheet No.
Drawn: BHR			
Checked: RRR	Jan. 2013		23

b07077023.dgn

STATE	FEDERAL AID ROUTE	FEDERAL AID PROJECT	STATE ROUTE	STATE PROJECT	SHEET NO.
VA.	—			8102-029-065	24

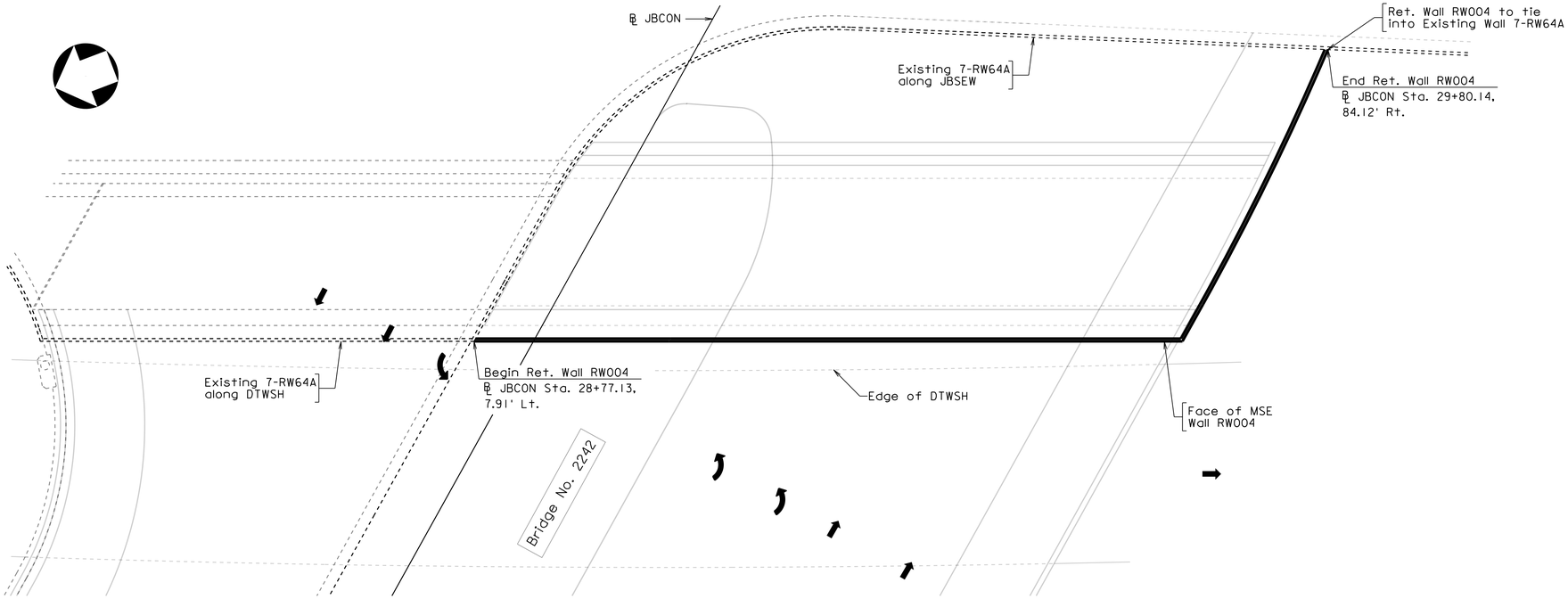

PLAN

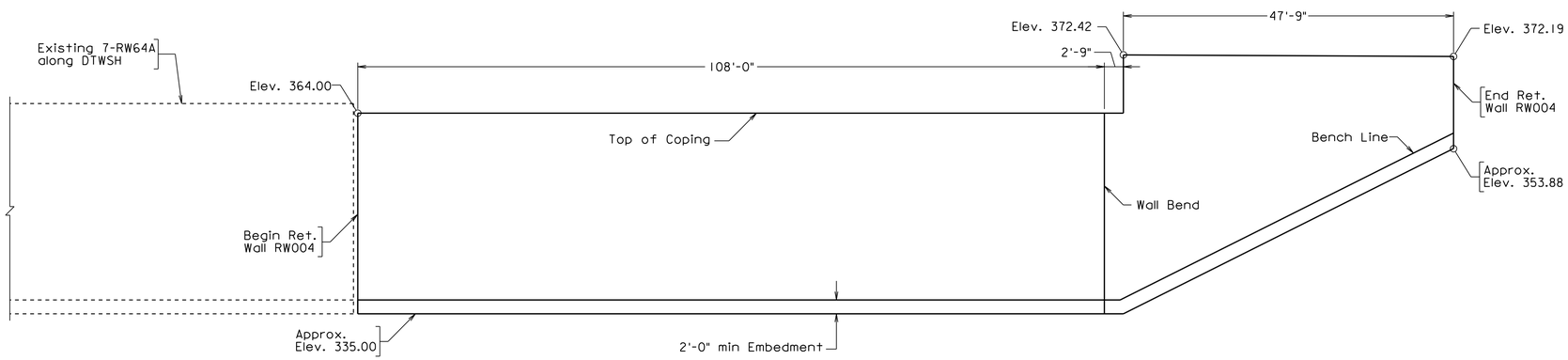

ELEVATION

PRELIMINARY PLANS

THESE PLANS ARE UNFINISHED AND ARE NOT TO BE USED FOR ANY TYPE OF CONSTRUCTION

Scale 1" = 10'

© 2013, Commonwealth of Virginia

b07077024.dgn

RK&K
RICHMOND, VA
STRUCTURAL ENGINEER

No.	Description	Date

Revisions

COMMONWEALTH OF VIRGINIA
DEPARTMENT OF TRANSPORTATION

STRUCTURE AND BRIDGE DIVISION

RETAINING WALL RW004
PLAN AND ELEVATION

Designed: BHR	Date	Plan No.	Sheet No.
Drawn: BHR			
Checked: RSH	Jan. 2013		24

STATE	FEDERAL AID ROUTE	FEDERAL AID PROJECT	STATE ROUTE	STATE PROJECT	SHEET NO.
VA.	—			8102-029-065	25

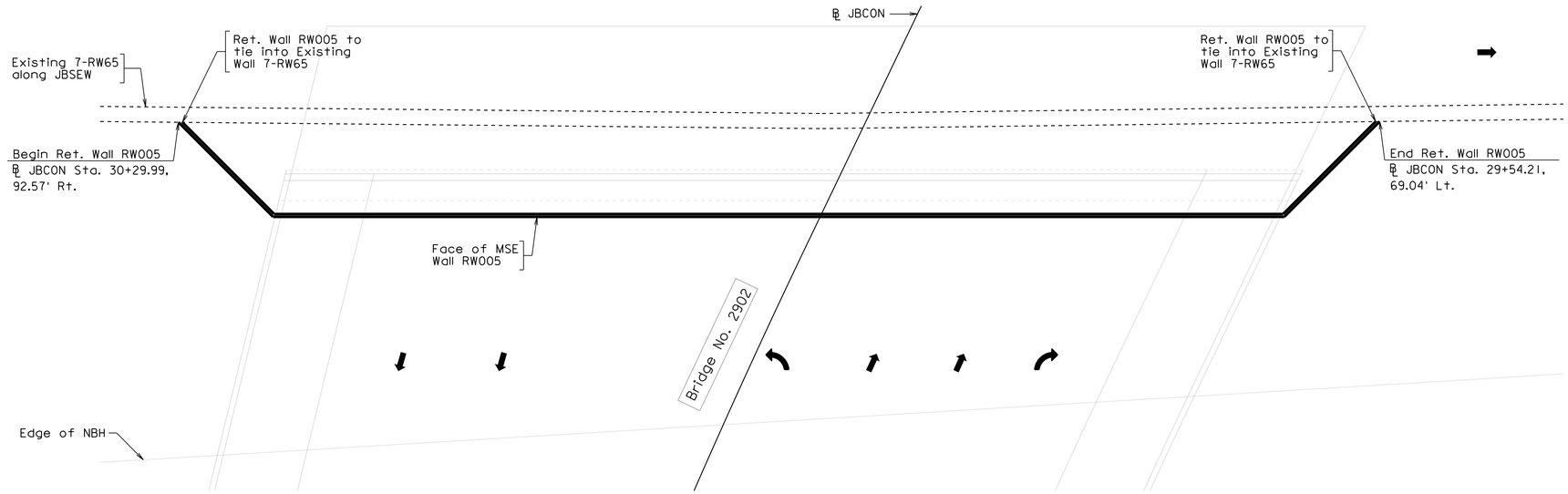

PLAN

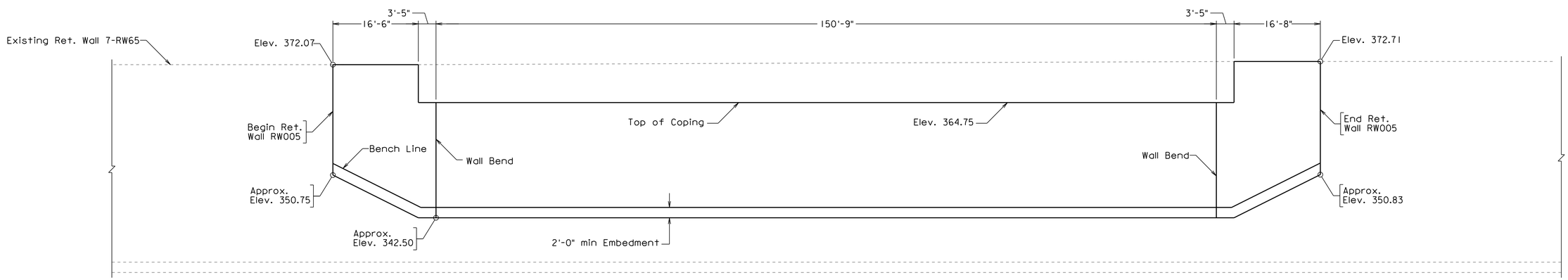

ELEVATION

PRELIMINARY PLANS

THESE PLANS ARE UNFINISHED AND ARE NOT TO BE USED FOR ANY TYPE OF CONSTRUCTION

Scale 1" = 10'

© 2013, Commonwealth of Virginia

RK&K
RICHMOND, VA
STRUCTURAL ENGINEER

No.	Description	Date
	Revisions	

COMMONWEALTH OF VIRGINIA
DEPARTMENT OF TRANSPORTATION

STRUCTURE AND BRIDGE DIVISION

RETAINING WALL RW005
PLAN AND ELEVATION

Designed: BHR	Date	Plan No.	Sheet No.
Drawn: BHR			
Checked: RRR	Jan. 2013		25

b07077025.dgn

STATE	FEDERAL AID ROUTE	FEDERAL AID PROJECT	STATE ROUTE	STATE PROJECT	SHEET NO.
VA.	—			8102-029-065	26

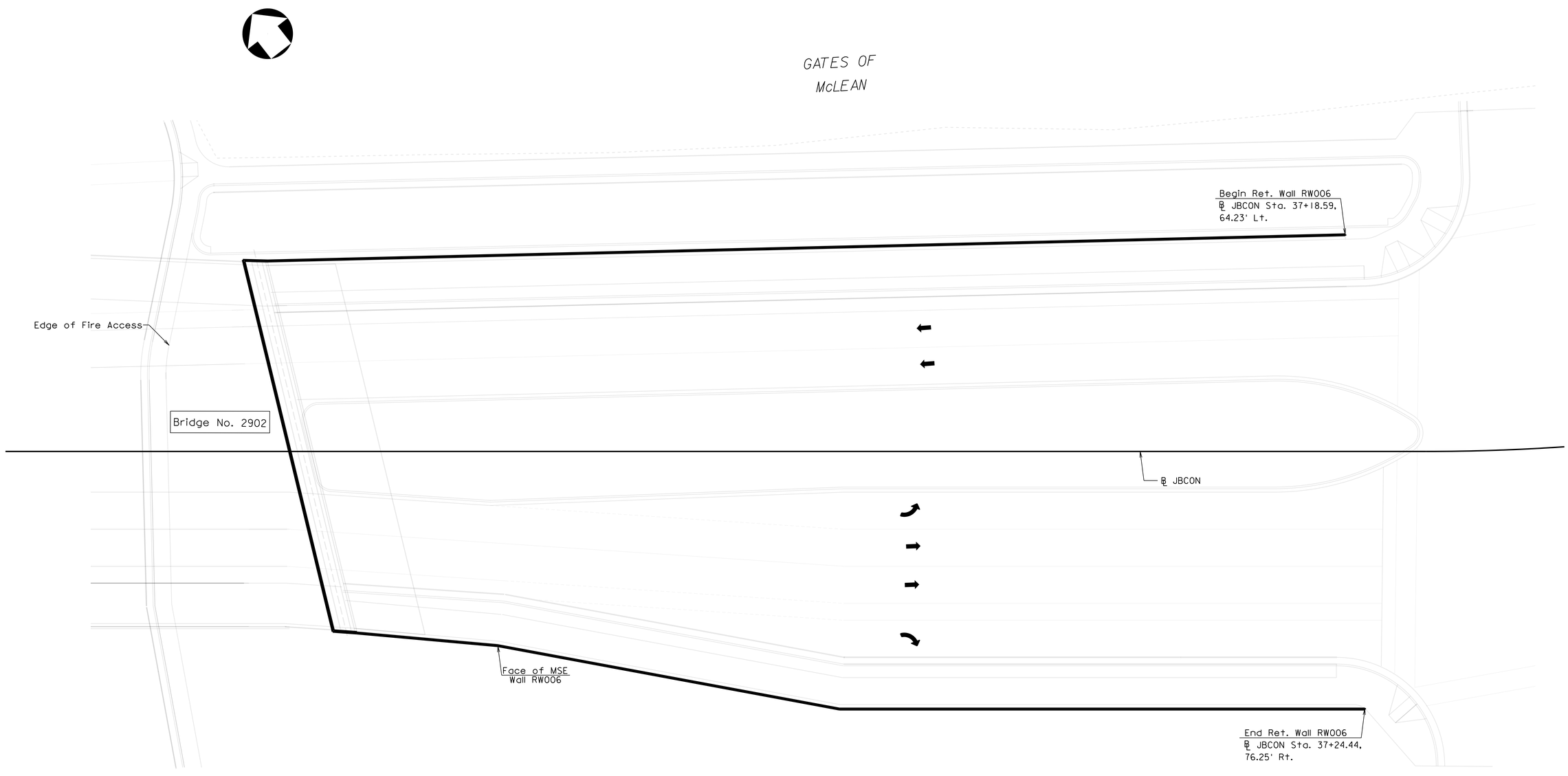

b07077026.dgn

RK&K
RICHMOND, VA
STRUCTURAL ENGINEER

PRELIMINARY PLANS

THESE PLANS ARE UNFINISHED AND ARE NOT TO BE USED FOR ANY TYPE OF CONSTRUCTION

Scale 1" = 15'

© 2013, Commonwealth of Virginia

No.	Description	Date
	Revisions	

COMMONWEALTH OF VIRGINIA
DEPARTMENT OF TRANSPORTATION

STRUCTURE AND BRIDGE DIVISION

RETAINING WALL RW006 PLAN

Designed: BHR	Date	Plan No.	Sheet No.
Drawn: BHR	Jan. 2013		26
Checked: GSJ			

STATE	FEDERAL AID ROUTE	FEDERAL AID PROJECT	STATE ROUTE	STATE PROJECT	SHEET NO.
VA.	—			8102-029-065	27

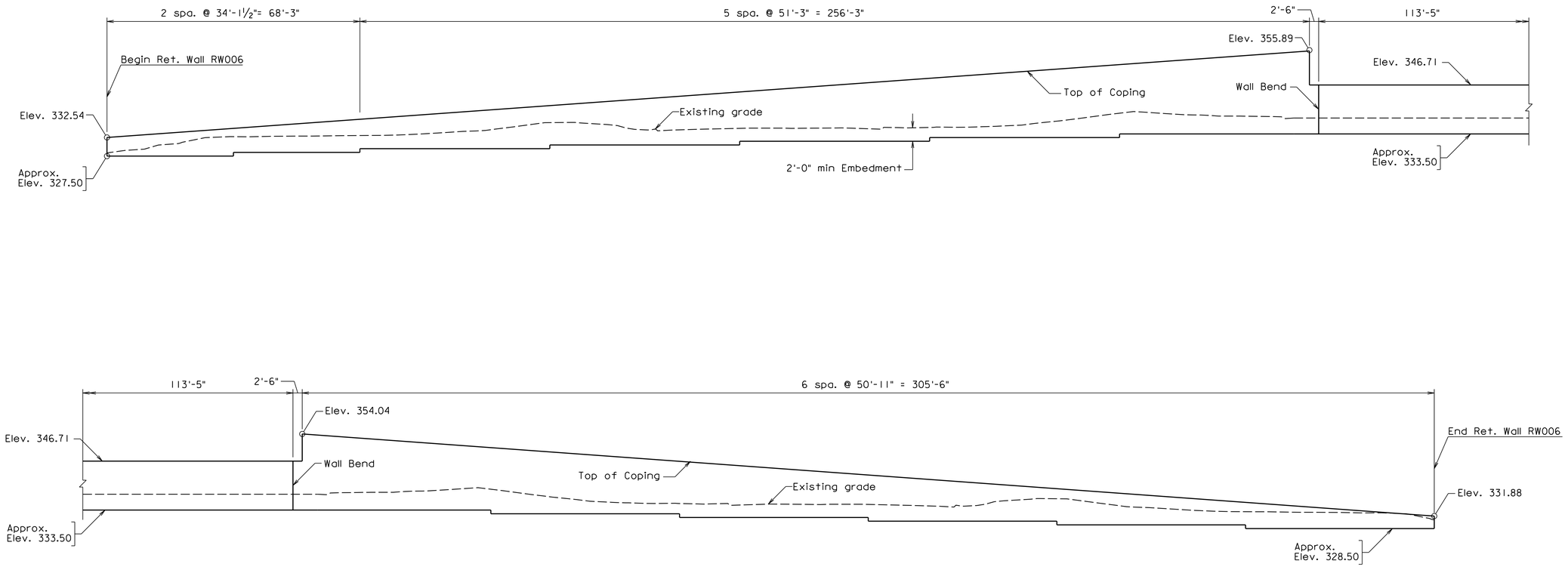

ELEVATION

b07077027.dgn

RK&K
RICHMOND, VA
STRUCTURAL ENGINEER

PRELIMINARY PLANS

THESE PLANS ARE UNFINISHED AND ARE NOT TO BE USED FOR ANY TYPE OF CONSTRUCTION

Scale 1" = 15'

© 2013, Commonwealth of Virginia

No.	Description	Date
	Revisions	

COMMONWEALTH OF VIRGINIA
DEPARTMENT OF TRANSPORTATION

STRUCTURE AND BRIDGE DIVISION

RETAINING WALL RW006
ELEVATION

Designed: BHR Drawn: BHR Checked: RRR	Date	Plan No.	Sheet No.
	Jan. 2013		27