Rhyming Word Pictures

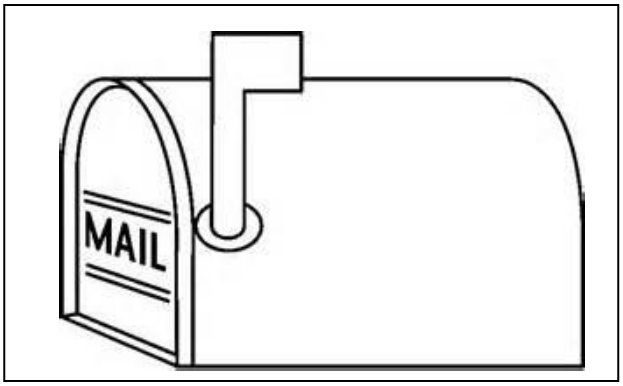

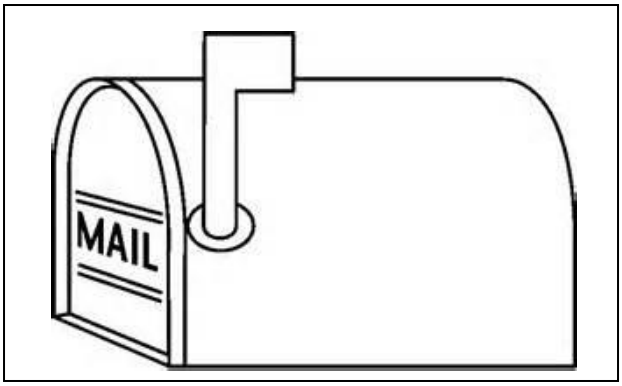

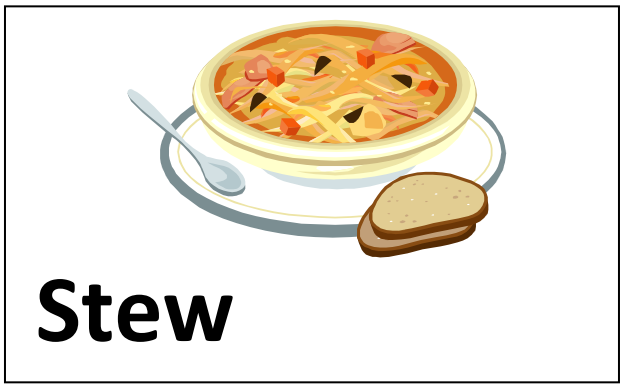

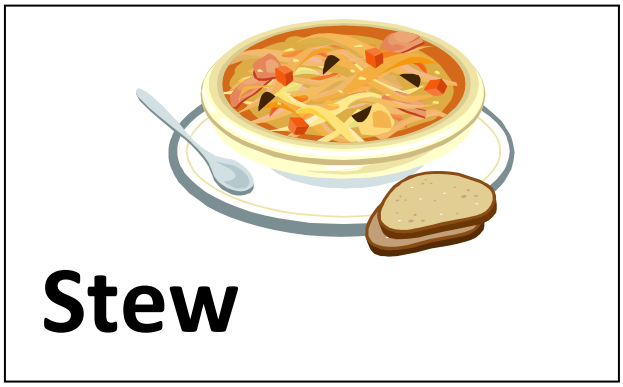

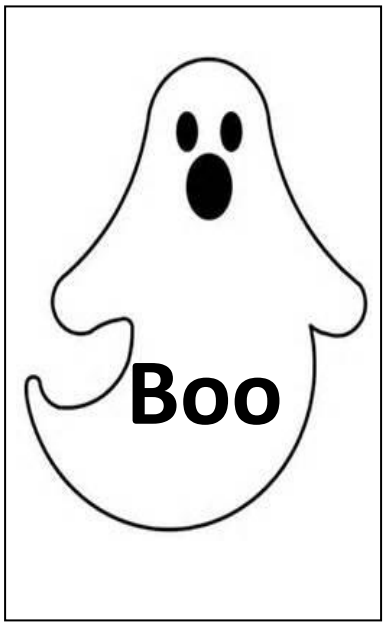

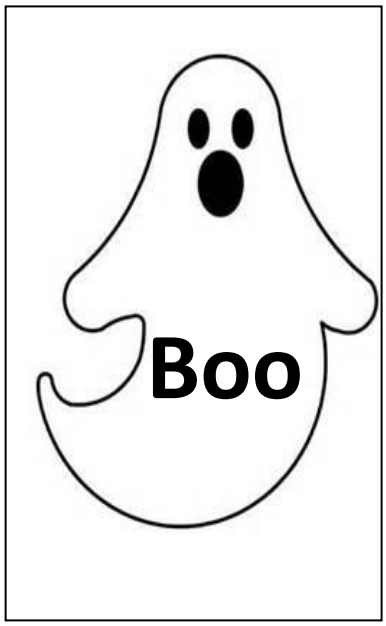

Fairfax County Public Library
12000 Government Center Parkway
Suite 324 Fairfax, VA 22035
703-324-3100
www.fairfaxcounty.gov/library

A Fairfax County Va., publication

To request this information in an alternate form contact the Early Literacy Outreach Office at 703-324-8413 or TTY 711.

November 2014

GLUE

Shoe

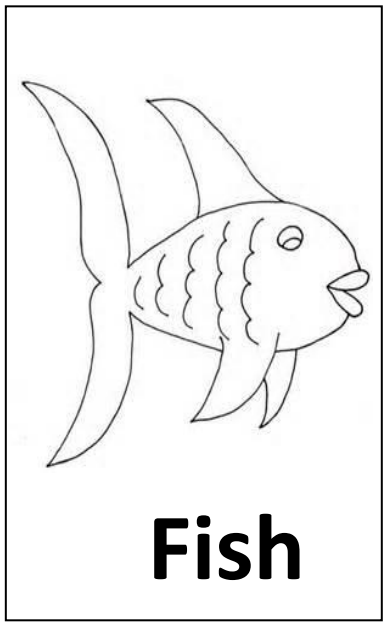
Fish

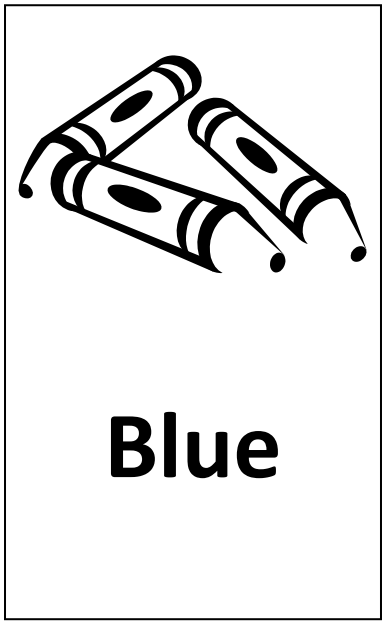
Blue

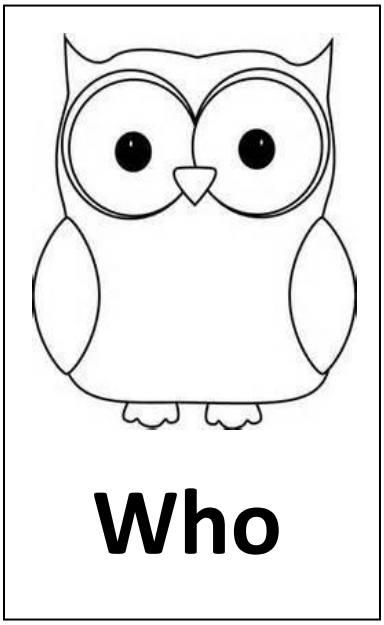
Who

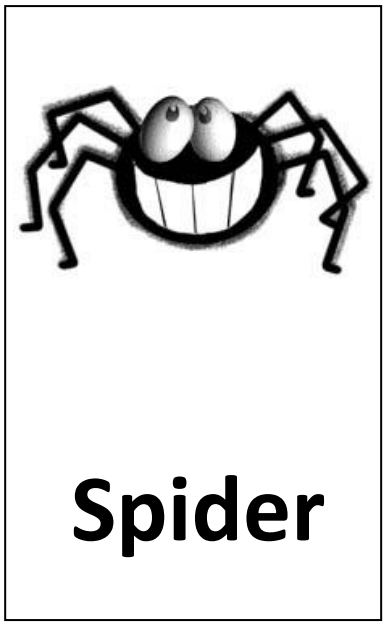
Spider