Fairfax County Park Authority

Guide to Trail Management

TABLE OF CONTENTS

INTRODUCTION 2

SECTION I – TRAIL PLANNING

- Planning Elements 3
- Countywide Trails Plan 3
- Land Development 4
- Park Master Plans and Park General Management Plans 4
- Green Infrastructure Priorities Map 5
- Cross County Trail (CCT) 5

SECTION II – TRAIL DEVELOPMENT

- Project Priorities 6
- Funding 6
- Siting Considerations 7
- Design Considerations 7
- Stream Crossings 8
- Trail Accessibility and Amenities 9

SECTION III – TRAIL MANAGEMENT

- Trail User Information 11
- Signs and Marking 11
- Multi-User Coordination 14
- Trail Etiquette 14
- Trash-Free Trails 14
- Public Support & Involvement 15
- Park Authority Programs 16

SECTION IV – TRAIL MAINTENANCE

- Trail Types 18
- Trail Maintenance Standards 20
- Routine Trail Tasks 22
- Projects and Life Cycles 22
- Maintenance Tools 22

APPENDIX A - TRAIL MAINTENANCE STANDARDS

APPENDIX B - ROUTINE TRAIL TASKS

APPENDIX C - GLOSSARY

APPENDIX D - ADDITIONAL REFERENCE MATERIAL

Introduction

The Fairfax County Park Authority is the steward of the County's numerous natural, cultural and recreational resources. Managing over 22,000 acres of land, the Park Authority is the leading provider of active and passive recreational facilities in the region. Trails provide one of the primary means for citizens to enjoy the many oases of green in the County, with over 200 miles of trails in the County park system alone. While trails are used for a variety of recreational purposes, they also serve the community by providing connectivity as transportation corridors between homes, businesses, schools and parks.

This Guide to Trail Management is designed to provide insight to the community and guidance to the Park staff on how trails are planned, developed, managed and maintained on Fairfax County parkland. There are four sections in the plan, with associated appendices to provide more specific information.

Section I-Trail Planning provides a brief overview of the crucial elements taken into consideration when planning trails on parkland. Numerous existing Countywide plans and Park Authority Policies are summarized, the vital role public input plays in the development of those plans is outlined, and the synergy between the plans is discussed.

Section II-Trail Development focuses on those issues taken into consideration when developing trails. Project priorities, funding, siting and maintenance considerations; trail accessibility and amenities are outlined.

Section III-Trail Management outlines the Park Authority's management methods for trail use and public support and involvement in that use. User information, signage, markings, trail etiquette, Park Authority programs and other management strategies are summarized.

Section IV-Trail Maintenance describes the types of trails offered by the Park Authority, reviews routine maintenance tasks performed on trails, maintenance standards, trail renovation programs, and those tools the Park Authority uses to maintain over 200 miles of trails within the Park system.

Section I-Trail Planning

Trail planning is a process that considers a multitude of factors. The Park Authority trail system consists of a variety of trails, and each trail is planned with a specific purpose in mind. It may be part of a network of trails, such as the Cross County Trail system, a looped trail within an individual park, part of a transportation corridor, for a specific purpose such as mountain biking or interpretation of natural resources, or for multiple recreational uses. All trail planning includes a large amount of public input. It must also consider the environmental impacts, as well as the impacts and relationship to adjoining properties and recreational facilities.

Planning Elements

The Comprehensive Plan for the County of Fairfax, Virginia and the *Countywide Trails Plan* define trails to be constructed throughout the County. The Park Authority develops Park General Management Plans, Conceptual Development Plans and then Park Master Plans for individual parks in order to plan and develop active and passive recreational facilities, including trails. Park Policy # 101.3 establishes the FCPA policy on Greenways, and Policy 103.2 outlines the FCPA Policy on trails.

The Guide to Trail Management concept is to structure these multiple Plans into a single Park Authority Guide for use by the agency and staff to provide direction now and in the future. Trails are a form of development, and have short and long-term impacts on both natural and cultural resources. The Guide to Trail Management evaluates ways to reduce the stress put on these resources by construction and use of trails. These impacts are considered in the planning and development stages; and continue with efforts to educate the public to ensure that the citizenry can contribute to the preservation of their natural and cultural resources.

The Countywide Trail Plan

The *Countywide Trail Plan* is a component of *The Comprehensive Plan for the County of Fairfax, Virginia*. It is modified periodically and approved by the Fairfax County Board of Supervisors (BOS). This plan designates trail surface types and widths for the major trail systems within the County. Its primary focus is the interconnectivity of trails and the establishment of transportation corridors, both within and outside parks.

Land Development

Residential, commercial and other land development is governed by *The Comprehensive Plan.* The plan determines the associated impacts of development on County infrastructure, including the provision of parks and recreational facilities. Frequently, developers are required to include trails as part of their development as defined by the *Countywide Trail Plan*. Such trails are designed in consultation with Park Authority staff and constructed by the developer to Park Authority standards. Upon completion, the facilities are generally dedicated to the County, either the Board of Supervisors or the Park Authority. These trails frequently connect to existing park trails, and once approved for acceptance into the public domain, are managed by the Park Authority.

Park Master Plans and Park General Management Plans

The Park Authority establishes General Management Plans for individual parks that define existing natural, cultural and historic resources. The GMP also determines suggested active and passive recreational uses for the park. The GMP then forms the basis of the Park Master Plan that acts as a blueprint for park improvements. The Plan may include trails as shown on:

- The *Countywide Trail Plan* through the park
- Suggested by staff or requested by citizens during the public input process
- Desired connections either to facilities within the park or to other parks and trails

The trail surface type and expected user types are defined during the planning process. These trails are typically constructed during the development of individual parks and become a part of the Park Authority trail system.

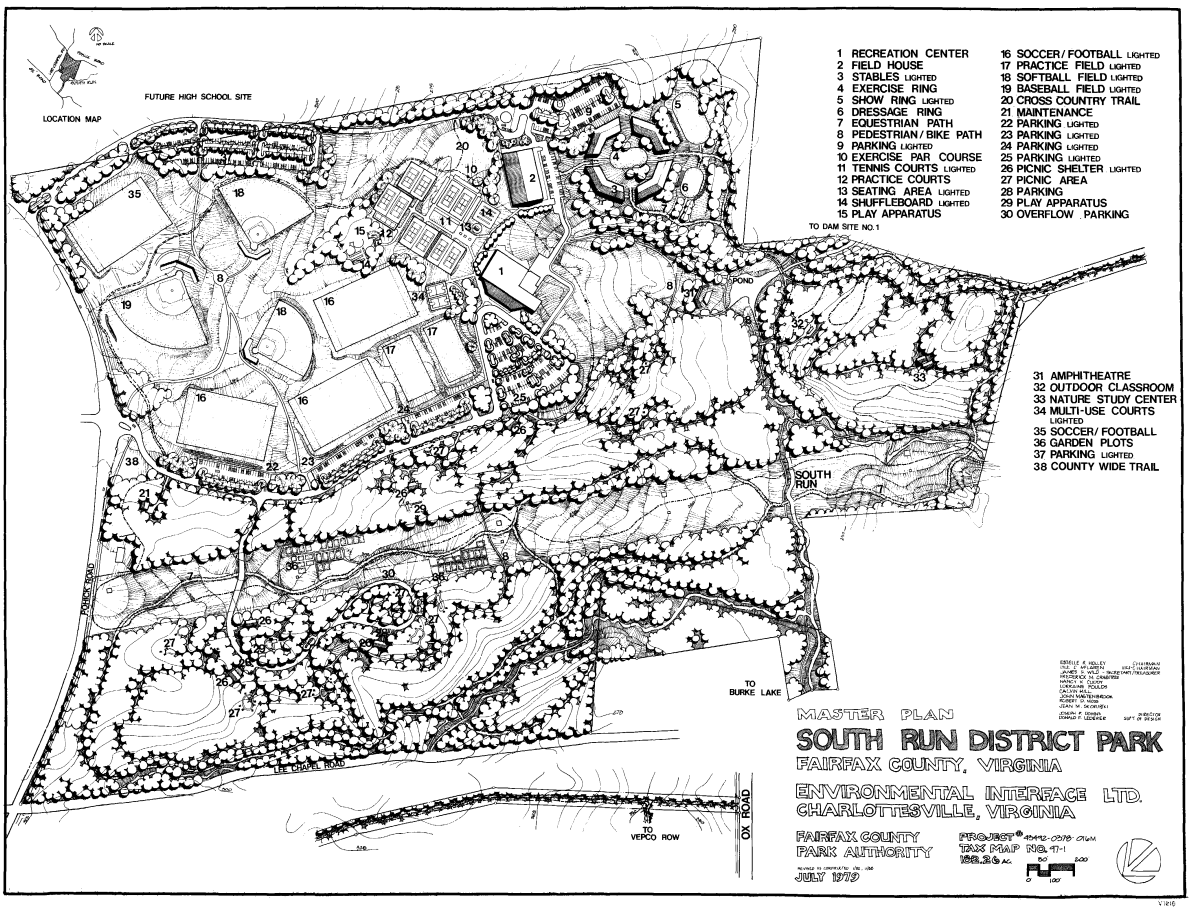

Green Infrastructure Priorities Map

The Green Infrastructure Map identifies environmental and cultural resources deserving protection and preservation. The map utilizes existing environmental, open space, and cultural resource data to define areas of the County that have the greatest concentration of natural and cultural resources. Some factors considered in establishing priority areas include, but are not limited to:

- Wetlands
- Resource Protection Areas and Flood Plains
- Tree Cover
- Agricultural and Forestry Districts
- Archeological Sites
- Proximity to Parkland

The map is used as a tool to define green space priorities for land acquisition, to protect key environmental resources on developing sites, and to target resources that require further protection. Trails may be an appropriate recreational amenity in these green infrastructure priority areas.

The Cross County Trail (CCT)

The Fairfax County Cross County Trail (CCT) provides a connection between the Occoquan River near Route 123 in the south to the Potomac River at Great Falls in the north. When completed, the CCT will be close to forty miles long. The CCT route connects three major stream valleys and greenways: the Pohick Creek, Accotink Creek and Difficult Run. The CCT is primarily on Fairfax County parkland, but also is routed through other public land, private property and along sidewalks. The CCT is a result of a joint effort between the County and volunteer organizations to resolve trail issues and volunteer construction or maintenance projects. Several groups have been integral to the planning and implementation of the CCT. These groups include Fairfax Trails and Streams (FTAS), the Great Falls Trail Blazers (GFTB), the Hunters Valley Riding Club (HVRC), the Washington Area Bicyclist Association (WABA) and the Mid-Atlantic Off Road Enthusiasts (MORE). Trail issues are also coordinated with the County Non-Motorized Transportation Committee (NMTC).

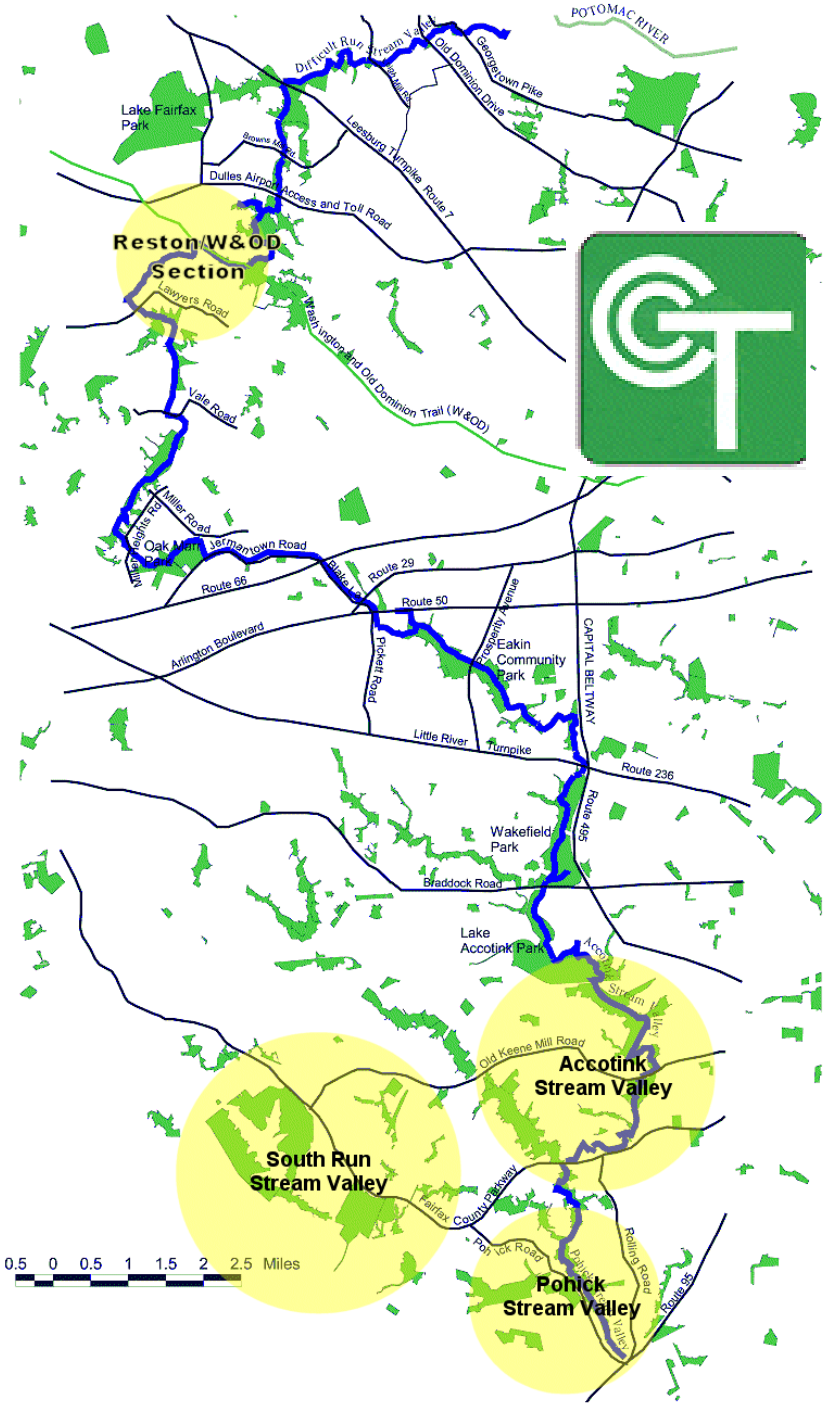

Section II-Trail Development

The Park Authority develops planned trails in several different ways. As previously mentioned, internal park trails may be a part of the larger development plan for a park and be constructed as part of the park development. Trails are contributed to the Park Authority as part of the development process – either through proffers or as development requirements. Stream valley trails may be stand-alone projects and constructed through the bond development process or with funds from other sources. Volunteer groups may work with the Park Authority to improve or define routes that will be used as natural surface trails or may be improved by adding an alternative surface. The Park Authority may construct hard surface trails, such as asphalt, gravel or stonedust, as part of its construction program.

Project Priorities

The Park Authority maintains a list of possible new park trail projects in consultation with the Park Authority Board and the representatives on the Non-Motorized Transportation Committee. The priority of trail construction projects is determined by the following factors.

1. Projects located within major trail corridors that have existing trails with missing gaps and can be constructed without additional land acquisition.
2. Trails in secondary trail corridors or those that require substantial land acquisition to complete.
3. Trails within staffed parks
4. Trails within community and neighborhood parks, and small, isolated stream valleys without the potential for major connections as defined in the *Countywide Trails Plan*.

Funding

Trails are constructed on Park Authority land through several different methods as previously noted. Developers in the County are required to build trails included in the countywide trail plan as part of the development process. Volunteer groups may build sections of trail having very little funding support. Park Authority staff repairs trails and constructs small connector trails with annual appropriations. The Park Authority constructs other needed trails within parks through a variety of funding sources.

- **Bond Referenda**

The County will present a bond referendum for park acquisition and improvement to the citizens for their consideration. These referenda are approved or denied by the citizens by majority vote. Resulting funds from these General Obligation Bonds allow the construction of large trail projects, as well as smaller repair and replacement projects. These projects are prioritized as noted above.

- **Grant Support**

To supplement bond funds, grant funding is often sought. Most trail grant programs are from reimbursable sources, with a portion of the money spent during design and construction of the project submitted for reimbursement upon project completion. Review of grant funding sources is ongoing and accomplished with the cooperation of the Park Authority Grants Administrator.

- **Donations**

Volunteer groups frequently make donations to the Park Authority for trail construction. Homeowners associations and/or other organized citizen groups desirous of a trail connection will approach the Park Authority with the offer of funds to assist in the construction of a trail. The Park Authority's Mastenbrook Grant Program provides a matching amount from Park Authority bond funds set aside specifically to assist volunteer groups in funding park projects. Individual donations are also accepted as a contribution towards trail improvements.

- **Proffers**

During the rezoning process, proffers may be offered by individual developers to provide amenities in parks nearby or within the new development. These proffers may be designated for specific improvements, may be general in nature, may be in the form of a cash set aside, or may be actual construction of the amenity. Trails may be built with proffered funds designated for trails or with funds that are only specified for a park or area.

Siting Considerations

Many factors guide the location of trails. The various trail plans mentioned in Section I are used as a general guide for identifying a trail's general location. A staff team determines the final layout by evaluating a variety of field conditions. Trail locations are affected by some of the following factors:

- Unique Natural and Cultural Resources
- Proximity to streams, floodplains and Resource Protection Areas
- Soil Types
- Existing Vegetation
- Steepness of slopes
- Distance from neighboring properties

These factors must be considered in order to minimize potential impacts to natural resources and the future management of those resources. Trails are a valuable tool to educate the public about these resources and to provide numerous recreational opportunities. However, trail construction can introduce new problems or compound existing impacts on the natural resources through which they pass. Trail location, surface type, construction methods, and management practices all influence the impact a trail has on the immediate area. The primary goal in locating a trail is to minimize disruption to existing vegetation and hydrology.

For trail siting in sensitive areas, the agency utilizes the *Stewardship Resource Guide: Trails in Natural Areas* to provide guidance on environmental issues. This guide outlines how trails affect habitat and resources; including the creation of "edge" effect, habitat fragmentation, introduction of exotic invasive plants, compaction of soil, trampling of vegetation, soil erosion, disturbance of wildlife and other affects.

Design Considerations

A variety of issues are considered during trail development. Careful and diligent design will lengthen the life of a trail and minimize annual maintenance costs. Many site factors noted above contribute to the construction of an easily maintained trail - minimal slopes, reasonable distance from streams, stable soils, etc.

Surfacing should be selected to provide as much stability and as low maintenance cost as possible. Generally, asphalt trails are preferred in areas where washouts or flooding may be possible.

Trails should be wide and strong enough to allow use by small to medium-sized construction and maintenance equipment. On sections of trail with only one point of maintenance access, turning

radii and stream and culvert crossings should allow for maintenance vehicles, with turnarounds provided where possible. Multiple access points are desirable on trails greater than 1,000 feet in length. Provisions should be made during design to block all vehicular traffic (other than maintenance vehicles) from entering a trail from public streets, interior park roads or parking lots. Both sides of stream crossings should be accessible to equipment, it therefore is not necessary to have all trail entrances accessible to vehicles.

Design standards are defined in the Fairfax County Public Facilities Manual (PFM). Graphic depictions of these standards can be found in *Appendix A-Trail Maintenance Standards*.

Stream Crossings

It is important that the all stream crossings be adequately sized to handle the normal flow of the water through the channel or stream. Bridges and other stream crossings should be designed to be low maintenance. It is important to recognize that each stream crossing is unique and there are not specific rules for a choice of stream crossing. Numerous factors dictate the type of crossing chosen, including use demographics, the steepness of streambanks, normal water volume levels, the presence of trees and root systems at the crossing and the length of the crossing.

Bridges are generally used when the stream banks are very steep and the normal flow of water volume in the creek is high. During a major storm event, bridges allow large debris to pass underneath without blocking the crossing. Crossing points should be located in relatively flat areas of the stream. Natural fords are the most ideal locations for stream crossings.

Fair weather crossings are generally used when the stream banks are gently sloped, the normal flow of water volume is light, and the impact on trees in the area is minimal. These crossings are designed to allow maintenance vehicles to cross, as well as all trail users. Water flows over a concrete pad at a general depth of one-half inch. Cylindrical stepping stones are placed in the crossing to allow pedestrians to cross the stream above the water level. Horseback riders and bicyclists are encouraged to dismount and walk across these stepping stones, as the concrete pads can become slick due to algae growth during wet periods. A typical fair weather crossing is shown here.

Open-box culverts are also used in certain locations where high water volume is generated during a storm event. Larger stream systems such as the Accotink Creek, Pohick Creek, Cub and Holmes Runs have large volumes of water normally. During major storms, this volume may increase 5 to 50 fold. Open box culverts allow for all trail users to cross the stream, allow for a free flow of water at the crossing during normal periods, allow aquatic life to pass the crossing, and allow large debris to flow over the crossing during storm events. The Park Authority has begun to use these type of crossings, and will continue to refine their designs to provide for future use. A depiction of an open-box culvert is shown below.

Trail Accessibility & Amenities

A variety of factors add to the accessibility and enjoyment of a trail. In addition to mapping the trail and providing signs so that the trail is visible, the following factors increase the level of use and enhance the recreational experience of a trail.

Parking

Parking may be provided at a park adjacent to or nearby the trail. A trail connection should be constructed between the parking lot and the main trail. Parking will be shown on trail maps and the website.

Entrances

Trail entrances are generally located off public streets or through adjacent parkland. Trail entrances are marked by a sign and shown on trail maps and the website.

Kiosks

Kiosks provide valuable information for all users. Kiosks are located at areas central to a major trail system to serve as a focal and starting point for as many users as possible. Depending on the size and other characteristics of the trail system, more than one kiosk may be necessary to address the entire trail system. The kiosk will typically contain a map of the trail system, as well as trail use guidelines, information about user groups, emergency information, and other information helpful to a user. A typical kiosk design, constructed of wood, is shown here.

Accessibility

Accessible entrances allow users in wheelchairs or other assisting devices access to the trails. The guidelines for trail access are somewhat flexible and it is not possible for all trails to be accessible for all users. However, it is the goal of the Park Authority to provide access for as many trails or sections of trails as possible.

Drinking Water and Food Sources

Water and food are frequently co-located with restrooms in staffed parks. The availability of vending machines or a snack bar allows users to extend their time on the trail. The location of food and water sources will be noted on trail maps.

Restrooms

Permanent restroom facilities are located at various parks. Some other parks, such as athletic field complexes, may have seasonal portable restrooms. Restroom locations are noted on trail maps.

Benches

Benches can be an asset and increase trail use by adding a place for respite. Senior citizens or persons with physical disabilities find that proper placement of benches allow them to use trails with greater comfort. Along stream valley trails and other connecting trails, benches may be provided every ½ mile. Certain bench locations are driven by user demographics. Benches are located more often within staffed parks and in open areas where user safety is easy to determine. Six foot benches with backrests are the Park Authority standard. Benches are anchored in concrete and are constructed of steel and coated with molded PVC, or can be constructed of recycled plastic. A typical park bench is shown here.

Section III-Trail Management

Trail management is the key to having a successful trail system. A successful trail system must have specific and consistent management strategies implemented to ensure trail access, provide a quality experience for the user, and minimize maintenance impacts upon Park Authority staff. The education of the users and public involvement is a major component in the Park Authority's trail management strategy. Accurate signage, maps, markings, trail etiquette, and the Park Authority's own programs all form the basis for this strategy. Park Authority trails are designated as multi-use trails unless otherwise posted.

Trail User Information

A vital component of any trail system is information about a trail's location and routing. Information regarding Park Authority trails is presented to trail users in a variety of formats.

Trail Brochures

Trail Brochures have been developed for Park Authority trails. There are two folder designs – one for the Cross County Trail maps and one for other Park Authority trail maps. The folders form a self-mailer and may contain individual maps as requested by the user. For mapping purposes the Cross County Trail is divided into ten sections and is mapped as the sections are completed. Other Park Authority trails, including trails in major parks, are also mapped. These brochures are available in the kiosks

Park Authority Website

Completed and updated trail maps are available on the park website at:www.fairfaxcounty.gov/parks Text from the brochures are also included on the website.

Fairfax County Trails Map

The Fairfax County Department of Planning and Zoning (DPZ) maintains a map of existing trails appearing on the countywide trail plan. As Park Authority trails are constructed or mapped internally, that information is sent to DPZ to be included in updates of that map.

Signs, and Marking

Trail amenities, signs, and markings provide a major link towards making trails beneficial to a broad variety of users. These additions will allow a user to select a trail depending upon their capability. Or, adding some of these features could very well be the means of communication that will help minimize conflict.

Interpretive Signs

Interpretive signs enhance the recreational experience on a trail by providing information about the area surrounding the trail. Information may be environmental, historical, or cultural. Standard interpretive signs are constructed with imbedded fiberglass panels set in steel or aluminum frames. A typical interpretive sign is shown here:

Trailhead Signs

Trailhead signs are installed at the point of entry for major trails. They display a map of the trail with a "you are here" dot showing exact location.

Directional Signs

Many Park Authority trails are quite complex with numerous intersections and combined trail loops. In these and other instances, directional signs can be instrumental in making the trail easier to follow and more enjoyable to use in the process. Signs may also direct users to other park amenities, such as restrooms, athletic fields, picnic areas, etc. They may point to the locations of nearby streets and other facilities, such as schools or parking.

These signs are constructed of aluminum and marked with green letters or symbols on a white background. They may be mounted on u-channel posts, wood posts, or attached to fences, etc. A typical direction sign, constructed of 2" u-channel post with a 12"x18" aluminum sign is shown here.

Back Country, Mountain Biking, and Equestrian Trail Markers

These gravel/stonedust or natural surface trails are frequently inaccessible by a maintenance vehicle. The trail route is also often complicated, with many side trails and turns. In order to mark the trails so that users do not become confused or lost, a lightweight, flexible trail marker will guide the way on these trails. The markers may be color-coded to indicate different trail loops within a trail system, such as for a mountain biking complex. They are also used on less accessible sections of the Cross County Trail, labeled with the Cross County Trail logo. A typical flexible trail marker is shown here:

Distance Markers

Distance markers are beneficial for users on certain trails where the distance is easily identifiable and a great number of intersections do not exist. For example, on a loop trail where there is a defined beginning and ending designation; or on a straight trail section that connects from one strategic point to another. The distance markers are set at ½ mile intervals, providing the user with a reference point for goal-oriented workouts and other measurements.

Multi-User Coordination

The County has a wide variety of visitors using its trails and for the most part, these visitors share the trails without conflicts. Unfortunately, some conflict is inevitable. The most common user conflict occurs between those on foot and those riding bicycles, horses or in-line skating. The users may avoid much of this conflict by following the rules for right-of-way outlined below.

Information about Trail Etiquette, right-of-way rules, other trail use guidelines and safety warnings will be included in the information at kiosks, on individual signs and in the printed trail brochures as well as on the website.

An important factor considered throughout the planning, design, construction, and management processes is to avoid user conflict through design whenever possible. To some extent, surface type will naturally segregate users, as certain surfaces are better suited for certain uses. For example, equestrians generally do not use an asphalt trail, while natural surface trails are not selected by in-line skaters.

Evaluation of trail use and wear is an on-going part of trail management. In some situations, it will be necessary to prohibit one or more user-types from a trail, or even to close a trail completely. This is particularly true of soft surfaced trails (gravel, stonedust and natural surfaces).

Trail Etiquette

Trail etiquette is included as part of the official Park Rules. The rules are guidelines for behavior on the trails and includes the following:

- Maintain proper control of bicycles at all times
- Faster users pass on left
- Announce your passing –"Passing on your left"
- Stay on existing trails
- Stay off single-tracks when raining or muddy. Traffic on wet trails causes damage
- Do not disturb vegetation or wildlife
- Pets must be leashed at all times
- Trails and park close at dark
- Call 911 for emergencies

Trash-Free Trails

The Fairfax County Park Authority's trail system is a trash-free recreational facility. Trash cans are not provided along the trail system. Users are requested to carry out any trash they bring in and be respectful of the environment and other trail users. Information on this program is provided in trail brochures.

Public Support and Involvement

Public support and involvement is critical to the success of the trail system. Many Park Authority trails have user support. The Park Authority works extensively with volunteer groups who want to perform projects to either clean up designated areas or to improve our trail system. The volunteers can be scouting groups, clubs, special interest groups, private companies, or individuals or participants in Park Authority programs. Volunteer projects are very helpful and highly encouraged, but they require coordination with Park Authority staff to ensure success of the project. Park staff responsible for the land where the work will occur must be involved in the planning of any project. It is important that the scope of the project, timing, and defined responsibilities of the volunteer group and the Park Authority are established and agreed upon. If training is required, a training session is arranged between the volunteer group and Park Authority staff. If the project is the construction of a trail, Park Authority staff and representatives of the volunteer group will mark the route of any new trail clearly prior to any work commencing.

Organized trail groups provide input to the design, development and implementation of the trail system. They also provide trail maintenance and/or inspect and report maintenance needs to the staff through volunteer programs.

Trail Related Organizations:

- ***Fairfax Trails and Streams*** (FTAS) is the grassroots trail and environmental advocacy group that originated the Cross County Trail idea, identified a feasible/scenic route, led first Cross County Hike (Lorton to Great Falls) in 1999. Monthly meetings, e-news; leads hikes, trail construction/cleanup crews; working with landowners/users/governments to complete CCT.

- ***Great Falls Trail Blazers*** (GFTB) is a volunteer organization whose goal is to connect trail segments to provide multi-use, non-motorized access to parks, ball fields, shops, neighborhoods and the library.

- ***Hunters Valley Riding Club*** (HVRC) has been in existence since the early 1960's. It has a year round program of riding activities which include the use of riding rings, jumps, and trails. HVRC maintains an excellent network of trails in the Hunters Valley area of Vienna/Oakton.

- ***Mid-Atlantic Off Road Enthusiasts*** (MORE) is a non-profit organization dedicated to environmentally sound and socially responsible mountain biking. MORE is committed to expanding recreational opportunities for trail cyclists in the Washington, DC metro area by promoting multi-use trails.

- ***Washington Area Bicyclist Association*** (WABA) is a non-profit bicycle advocacy organization. WABA's mission is improving bicycling conditions and promoting bicycling in the metropolitan Washington, DC region. WABA envisions bicycle accommodations in all our transportation systems (roads, bridges, transit, trains, airports, and trail systems) so bicyclists have safe and secure access for recreation and commuting.

- ***Virginia Birding and Wildlife Trail*** The Huntley Meadows Park trail system has been designated as part of this trail by the Virginia Department of Game and Inland Fisheries.

- **Homeowners Associations**

A number of homeowners associations work with the Park Authority to maintain trails on common property that may connect with Park Authority trails. It can be beneficial on occasion to resurface the entire trail section on both Park and HOA property at one time, requiring coordination between the HOA and the Park Authority. The most significant benefit to the Park Authority is that these HOA trails connections are often the only access points available to the Park Authority trail section for a community. The HOA's also function as eyes and ears on the trails in their area, reporting maintenance and safety issues to Park Authority staff.

- **Countywide Non-Motorized Transportation Committee** (NMTC)

The NMTC also supports the CCT and works to recommend, coordinate and disseminate information on facilities for people to easily and safely travel between and through major commercial, residential, and natural areas using non-motorized transportation. The NMTC is comprised of citizens appointed by the Board of Supervisors to represent each Supervisory District and the major non-motorized transportation user groups as well as Fairfax County and Park Authority staff.

Park Authority Programs

Adopt-A-Park

The Adopt-a-Park program is a cooperative venture between the Park Authority and interested organizations, groups or individuals through which the members of the community assume maintenance responsibilities for designated park areas. These areas frequently include trails and trail entrances. This program has been highly successful in fostering a sense of ownership within a community of the park facilities within their community. The sense of pride that results benefits all park users and allows the Park Authority to direct its resources to other areas of the park system, which benefits the County at large.

The citizens, park staff and the resource itself benefit greatly from this program. All groups or organizations performing maintenance tasks on Park Authority trails must enter into an Adopt-A-Park agreement (with the exception of one-time stream valley clean up events).

Park and Trail Watch

This program is designed to bring County citizens, Park Authority staff and the Fairfax County Police together to ensure a safe system of parks and recreation facilities and services. This program operates much like a Neighborhood Watch program. Trail users can become involved in the Park and Trail Watch program and report illegal or suspicious activity, vandalism, hazardous conditions, maintenance needs, and other appropriate matters. Park Watch brochures will be made available at the trail information kiosks and staffed park sites to inform and encourage trail users to get involved in the program.

Section IV-Trail Maintenance

Trail maintenance is essential to assuring the safety of the trail user as well as extending the useful life of the trail. The Park Authority maintains planned trails that are either developed or accepted by the Park Authority - these trails are inventoried and entered into the maintenance management system database for accountability by the Park Authority. As new trails are planned and developed, Park Authority staff work internally to define trail additions, trail types and linear feet of trail to be added to the inventory database.

Trail maintenance is dependant upon a variety of development and use factors. Therefore, it is essential that each trail be identified by its type and that a trail classification system is in place to direct the maintenance program.

Trail Types

Trails are classified primarily in two ways, those with multiple uses and those with special uses:

Multiple Use Trails	Special Use Trails
Asphalt	Boardwalks
Gravel/Stonedust	Mountain Bike Trails
Concrete	
Wood Chip/Mulch	
Natural	

A third category: Unofficial Trails, is discussed at the end of this section.

Asphalt Trails

Asphalt trails are the most prevalent type of trail in the park system. They provide the largest number of use opportunities for walkers, runners, bikers and skaters. These trails are at least 6 feet in width and frequently 8 feet or more. No motorized vehicles are permitted.

Gravel/Stonedust Trails

Gravel and stonedust trails serve as the preferred surface in park areas that are difficult to access with paving equipment. They serve multiple users: runners, walkers, bikers and horseback riders. These trails are generally 6 feet in width. No motorized vehicles are permitted.

Concrete Trails

Concrete trails generally are found in older parks or are sidewalks within parks adjacent to buildings. The Park Authority does not design or construct concrete trails unless the location is in a very high traffic area near a building, or serving as a sidewalk to a building. Other surfaces are used in the remainder of the parks. No motorized vehicles are permitted.

Wood Chip/Mulch Trails

Wood chip and mulch trails serve a smaller user base than hard or semi-hard surface trails. Walkers, runners, mountain bikers and horseback riders are the most common users of these trails. Wood chip and mulch surfaces are appropriate in small lengths interior to parks. They require a high level of maintenance due to the natural degradation of the material, and should only be constructed in small segments. No motorized vehicles are permitted.

Natural Trails

Natural trails may be comprised of dirt, turf or other earthen materials. They are appropriate for most uses, vary in width and are preferred by horseback riders. No motorized vehicles are permitted.

Boardwalks

Boardwalks are used in wetland areas to provide access and opportunities to experience the wetland environment. One boardwalk at Huntley Meadows Park is used extensively as a resource interpretation tool. Boardwalks are used by pedestrians and are wheelchair accessible.

Mountain Bike Trails

Mountain Bike trails are unique within the Park Authority's trail system. They have a very specific use and may contain obstacles such as downed trees, gullies, and humps that enhance the mountain bike experience. These trails are natural surface and may be very steep, traverse hillsides and may cross streams or stream tributaries. The Park Authority recommends that the use of mountain bike trails be limited to accomplished mountain bikers.

Unofficial Trails

The Park Authority highly discourages the forging of new trails within the park system. These trails are generally created by foot or bicycle traffic through areas of a park not designated for that type of use. The forging of these types of trails has significant environmental impacts, causing soil compaction, damaging root zones of flora, contributing to erosion and sedimentary runoff and other negative impacts on natural resources. The Park Authority does not recognize these types of trails as official and does not maintain them.

Trail Maintenance Standards

The Park Authority adopted Maintenance Standards for all aspects of park maintenance in 1988. The standards are time and task specific for each maintenance activity performed by Park staff. The trails portion of the standards has been used as a model for other jurisdictions and the National Park Service in the development of their own standards.

The Park Authority's Maintenance Standards are essential in assuring the safety and continued life of the trail system. Trail repairs may be as minor as fixing a pothole in an asphalt trail or as major as the complete renovation of an entire trail section. Low areas that hold or channel water need to be repaired as soon as possible. Areas that have not held or channeled water in the past may begin to due to increased runoff from nearby development. If not addressed immediately, these areas can spread and damage large sections of trails. ***Appendix A-Trail Maintenance Standards*** lists detailed maintenance standards for all types of trails in the system. The standards outlined in this document will be incorporated into the Agency's existing standards and will be effective immediately.

Routine Trail Tasks

Park Authority staff perform a wide variety of routine maintenance tasks within the trail system. These tasks are all directed to extending the life expectancy of trails, providing the highest quality product to the citizens of the County, and ensuring the safety of trail users. Routine maintenance and inspection of the trail system also minimizes repair and renovation costs. For more specific information see ***Appendix B-Routine Trail Tasks***. The tasks are coded for ease of recognition.

Trail Inspection (RTT-1)

Trails must be inspected on a routine basis. Inspections should include the trail surface, any culverts and water crossings, all amenities, signs, and surrounding vegetation.

User safety should always be the primary consideration of any inspection. Potential safety problems should always take precedence when scheduling maintenance. Vandalism left unattended encourages more of the same and should likewise be a high priority for maintenance. Gang graffiti and "tagging art" should be documented with incident reports and police should be notified, then the graffiti removed or covered as soon as possible.

Inspections may also need to be done after severe weather events or storms. The Park Authority staff is trained to inspect trails during the performance of routine maintenance activities along trails.

Mowing (RTT-2)

Mowing is done on a regular basis to prevent trails from becoming overgrown. Brush and grass that grow along trails should not be allowed to grow to excessive heights within two feet of the edge of the trail surface.

Tree and Brush Pruning (RTT-3)

Pruning is performed for the safety of the trail user and to protect the trail and other assets located along the trail. Proper pruning also allows mowing operators to do a thorough and safe job. Inspectors need to be trained to identify potential hazards and to determine what can be handled by Park Authority staff and what will require the attention of a private contractor.

Leaf and Debris Removal (RTT-4)

Keeping the trail surface clean is one of the most important aspects of trail maintenance. Mud and other sediment needs to be removed along with fallen leaves and branches to ensure the safety of the users and to increase the life expectancy of the trail itself. This maintenance task is required for all trail surfaces. Debris removal from the trail surface should also follow all mowing operations along trails.

Snow and Ice Removal (RTT-5)

Some trails need to be cleared of snow and ice. Snow and ice should be removed from trails used by children going to and from school sites, trails leading to Park Authority RECenters or rental facilities.

Cleaning and Replacement of Culverts (RTT-6)

Culverts often become clogged with trash and debris that must be removed to prevent flooding and undercutting of trail surfaces. Culverts may also need to be upgraded in size or replaced because of deterioration or increased storm water flow due to increased surrounding development.

Maintenance of Water Crossings (RTT-7)

Water crossings can be bridges, fair weather crossings, or open box culverts. Debris needs to be removed on an as-needed basis from these structures to allow for free flow of water and to reduce the risk of flooding. These structures need to be inspected on a regular basis for erosion control and action taken accordingly to preserve or replace the structure.

Repairs to Signs and Other Amenities (RTT-8)

These repairs may include kiosks, wood and metal signs, benches, etc. These amenities need to be kept in safe and esthetically pleasing condition. Items that fall into disrepair often become the target of vandals. Repairs should be completed as quickly as possible to discourage vandalism.

Projects and Life Cycles

Trail repairs must be planned and coordinated for the repairs to be successful. As a general rule, trail repairs will not change the surface of the trail (asphalt trails repaired with asphalt, gravel with gravel, etc.). However, there may be a need to make a change in surface types if the existing surface is inadequate for the surrounding conditions or if the use of the trail has changed significantly. If this type of change is necessary due to citizen input or staff recommendation, it must be reviewed and approved by the agency prior to renovation.

The Trail Renovation Plan

The Trail Renovation Plan is a multi-year program designed to ensure the continued up-keep, repair and necessary replacement of large trail sections. The Plan is updated annually from trail inspections occurring throughout the year.

Life Cycles

In the Trail Maintenance Standards, (***Appendix A***) references are made to trail deterioration by trail type. The deterioration factor is determined by the level of required renovation for 1,000 linear feet of trail on an annual basis. This figure is used as a starting point to determine what the actual life cycles are for different trail types, but actual replacement costs cannot be determined until further inspection has been completed. When financially possible, these projects are included in the Trail Renovation Plan. For more costly replacements, planning must be done well in advance and included in a bond program.

Maintenance Tools

Trail Inventory

A trail inventory is maintained for all recognized trails within the County. The inventory is utilized to develop maps, identify budgetary needs and plan maintenance work.

- Location
- Class of trail
- Overall length of trail. If it has multiple surface types, include the lengths and width of each surface type
- Type, size, and location of all culverts and stream crossings. Note if the crossings will support a maintenance vehicle
- Location and type of major signs
- Location and type of other amenities, such as kiosks, benches, etc.
- Entry points for maintenance and emergency vehicles

This information will be gathered using GPS in combination with the GIS. The information will be stored in a database for an overall inventory of all Park Authority trails. After being gathered using GPS, the data will be transferred onto GIS ortho-photography, resulting in a highly detailed maintenance map of each trail. Each new trail should be entered as it is accepted.

Maintenance Management System

The Maintenance Management System is a database that retains maintenance records for all Park Authority facilities and maintainable assets. The system generates work orders and allows managers to track hours, costs, and resources used to perform maintenance tasks. A variety of reports can be produced to assist managers in their day-to-day and long term planning of maintenance. In addition to processing reports, the system allows users to produce work orders and to view current and past work orders and determine work order status.

The Park Authority uses the system to track trail inventory and produce and monitor preventative maintenance (PM) work orders for specific maintenance tasks. The database also accounts for curative maintenance tasks and renovation projects. Work orders can be initiated in several ways. A citizen may contact the Park Authority to report a problem or issue and a work request will be generated and sent to the appropriate crew for action. Preventive maintenance work orders are generated on daily, monthly and yearly schedules, based on the frequency required. Maintenance staff can generate their own work orders for curative or non-preventive related tasks. Other Park Authority staff can request work to be performed and send the request directly to the appropriate crew through direct access to the system.

Maintenance Maps

These maps include an aerial photo of the site, along with information on type of trail, length of trail segments, number of culvert pipes, bridges and fair weather crossings. This information is beneficial when planning maintenance activities on a particular trail system. The maps can also be distributed to the maintenance crews to help identify the exact area that needs to be maintained or repaired. An example of a typical maintenance map is shown below.

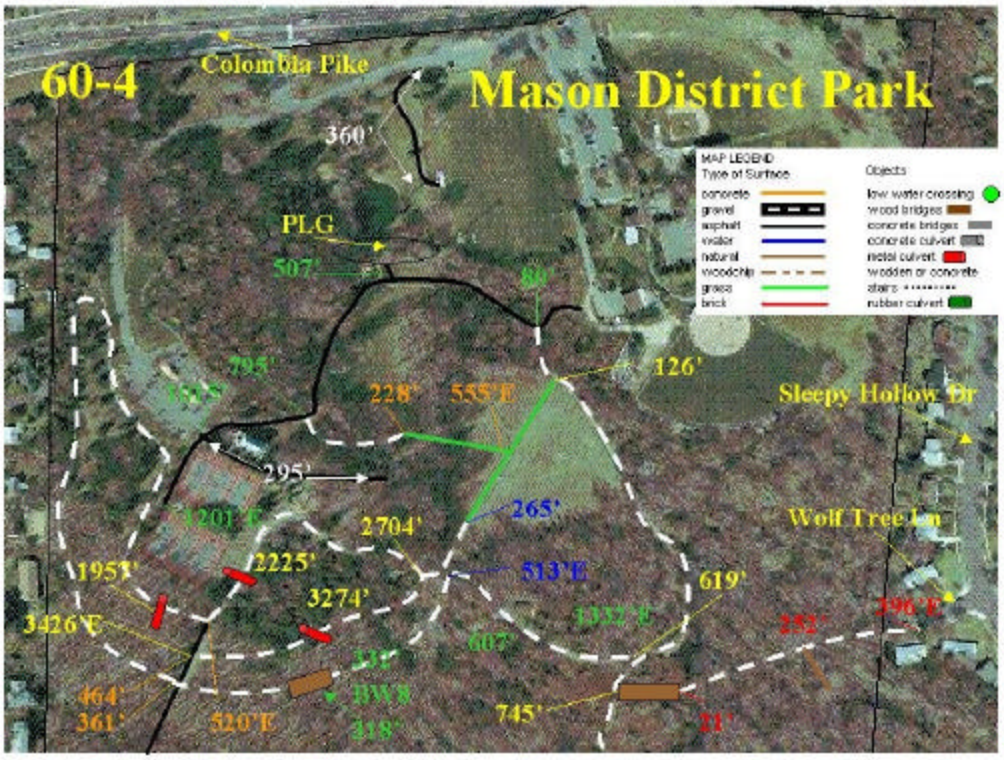

ACKNOWLEDGEMENTS

The following members of the Park Authority staff contributed to the development of the Guide to Trail Management:

<u>The Guide to Trail Management Team</u>
Greg Phipps, Manager, Area 4
Alan Crofford, Manager, Area 6
Jenny Pate, FCPA Trails Coordinator
Matt Devor, Area 5
Paul Hagerman, Area 7
Todd Bolton, Manager, Natural Resource Protection

<u>Park Operations Division Management Staff</u>
Timothy K. White, Director, Park Operations Division
Brian Daly, Manager, Grounds Management Branch

Appendix A
Trail Maintenance Standards

The Trail Maintenance Standards are the physical measurements and types of material required for trail surface maintenance of the Fairfax County Park Authority trails. Each Trail Maintenance Standard is the culmination of Park Authority maintenance based needs, and are adapted from the Fairfax County Public Facility Manual (PFM). The following Trail Maintenance Standards apply to the types of trails addressed within the Guide to Trail Management.

Considerations reflected in the Trail Maintenance Standards:

- Trail maintenance is performed by Park Authority staff.
- Capital equipment needs are listed for each standard. Non-capital equipment needs are not listed, and will be determined by the manager on site.
- The stated vehicles, equipment, methods, and volumes and weight for material pertain only to the completion of the task at site. Vehicles, equipment, methods, and materials do NOT include transport of materials to or from the site at which the task is performed.
- Calculations for man hours and weight are based upon "Ideal" or "Fair Weather" conditions. Humidity, extreme temperatures, wind, extreme grade changes, winding curves, mixing of cement, or the condition of equipment are NOT factored into any calculations.
- Volume and weight calculations used standards for asphalt and aggregate are from the Virginia Asphalt Association, Richmond, VA; and Chantilly Crushed Stone, Inc., Chantilly, VA. Asphalt equivalence is 1 cubic yard = 2.025 tons; VA21-A and Bluestone Dust equivalence is 1 cubic yard = 2 tons; Surge (4" x 6") and VA57 equivalence is 1 cubic yard = 1.5 tons.
- Volume and weight calculations for fill dirt used in the standards are based upon information furnished by William A. Hazel, Inc, Chantilly, VA; Hilltop Construction, Demolition and Landfill Company, Alexandria, VA; and the Falls Church Construction Company, Fairfax, VA. Fill dirt is to be absent of organic matter, and can vary as to percentages of sand and clay. (The weight of fill dirt can also vary greatly depending upon the moisture content resulting in a cubic yard weighing from 1.5 tons to 5 tons.) The equivalency frequently used in the construction industry is 1 cubic yard = 3 tons of fill dirt.

Abbreviations used are as follows:

a.	Cubic feet	=	cu. ft.
b.	Cubic yards	=	cu. yd.
c.	Hours	=	hr.
d.	Linear feet	=	l. ft.
e.	Square feet	=	sq. ft.

ASPHALT TRAILS – AVERAGE WIDTH OF 8 FT. (per 1,000 linear feet)

Pot Holes	
Maintenance Task	Patch & repair pot holes (12” x 12”). *(Based upon 5% trail deterioration per 1000’ per year, this =’s 400 sq. ft. or 50 l. ft.)*
Frequency	Patch & repair 4.0 sq. ft. (100 pot holes 12” x 12” = 1.0 sq. ft. enlarged to 24” x 24” = 4.0 sq. ft.) Annually or As needed.
Standard	.5 hr. per 4.0 sq. ft. pot hole (or 50 hrs. per 400 sq. ft.).
Staff Hours	Laborer .5 hr. Total .5 hr.
Materials	*Note: Standards were developed with base material and asphalt topping consisting of:* *1. 2” asphalt surface* *2. 4” 21-A base* Asphalt 4.0 sq. ft. 24” x 24” x 2” = 1152 cu. in. (.67cu. ft. or .05 tons) of asphalt. 67 cu. ft. (or 5 tons) of asphalt per year. Stone 4.0 sq. ft. 24” x 246” x 4” = 2304 cu. in. (1.33 cu. Ft. or .096 tons) of stone. 133 cu. ft. (or 9.6 tons) of stone per year.
Method	Remove old asphalt/debris. Enlarge edges an additional 6” on all four sides, and square asphalt edges of hole. Replace base stone and compress to grade as needed to meet PFM standard. Replace asphalt and compress even with trail surface.
Capital Equipment	Roller may not be required for Pot Hole repairs; hand tamper or vibrator are adequate.

ASPHALT TRAILS – AVERAGE WIDTH OF 8 FT. (per 1,000 linear feet)

Small Section	
Maintenance Task	Replacing small section of trail (1' x 8'). *(Based upon 5% trail deterioration per 1000' per year, this ='s 400 sq. ft. or 50 l. ft.)*
Frequency	Repair 16 sq. ft. section (25 sections 1' x 8' = 8 .0 sq,. ft. enlarged to 2' x 8' = 16 sq. ft.) Annually or As needed.
Standard	1.0 hrs. per 16 sq. ft. (or 25 hrs. per 400 sq. ft.).
Staff Hours	Equipment Operator 1.0 hr. Laborer 1.0 hr. Laborer 1.0 hr. Total 3.0 hrs.
Materials	*Note: Standards were developed with base material and asphalt topping consisting of::* *1. 2" asphalt surface* *2. 4" 21-A* Asphalt 16 sq. ft. 2' x 8' x 2" = 4608 cu. in. (2.67 cu. ft. or .20 tons) of asphalt. 66.75 cu. ft. (or 5.0 tons) of asphalt per year. Stone 16 sq. ft. 2' x 8' x 4" = 9216 cu. in. (5.33 cu. ft. or .384 tons) + 2 sq. ft. 12' x 24" x 6" = 1728 cu. in. (1.00 cu. ft. or .048 tons) equals 10944 cu. in. (6.33 cu. ft. or .432 tons) of stone. Total of 158.33 cu. ft. (or 10.80 tons) of stone per year.
Method	Remove old asphalt/debris. Square asphalt edges of hole. Replace base and compress to grade as needed to meet PFM standard. Replace asphalt and compress even with trail surface.
Capital Equipment	Dump Truck Roller may not be required for Small section repairs; hand tamper or vibrator are adequate.

ASPHALT TRAILS – AVERAGE WIDTH OF 8 FT. (per 1,000 linear feet)

Large Section	
Maintenance Task	Replacing large section of trail (8' x 50'). *(Based upon 5% trail deterioration per 1000' per year, this ='s 400 sq. ft. or 50 l. ft.)*
Frequency	Replace 400 sq. ft. section. Annually
Standard	.5 hr per 400 sq. ft. . (or .5 hrs. per 400 sq. ft.).
Staff Hours	Equipment Operator .5 hr. Equipment Operator .5 hr. Laborer .5 hr. Laborer .5 hr. Total 2.0 hrs.
Materials	*Note: Standards were developed with base material and asphalt topping consisting of::* *1. 2" asphalt surface* *2. 4" 21-A* Asphalt 400 sq. ft. 8' x 50' x 2" = 115200 cu. in. (66.66 cu. ft. or 5 tons) of asphalt. 66.66 cu. ft. (or 5 tons) of asphalt per year. Stone 400 sq. ft. 8' x 50' x 4" = 230400 cu. in. (133.33 cu. ft. or 9.6 tons) + 50 sq. ft. 50' x 12" x 6" = 43200 cu. in. (25 cu. ft. or 1.2 tons) equals 273600 cu. in. (158.33 cu. ft. or 10.8 tons) of stone per year.
Method	Remove old asphalt/debris. Square asphalt edges of hole. Replace base and compress to grade as needed to meet standard. Replace asphalt and compress even with trail surface.
Capital Equipment	Bucket Loader York Rake Dump Truck Roller

Asphalt Trail Details – Average Width 8’ / 1000’ LF

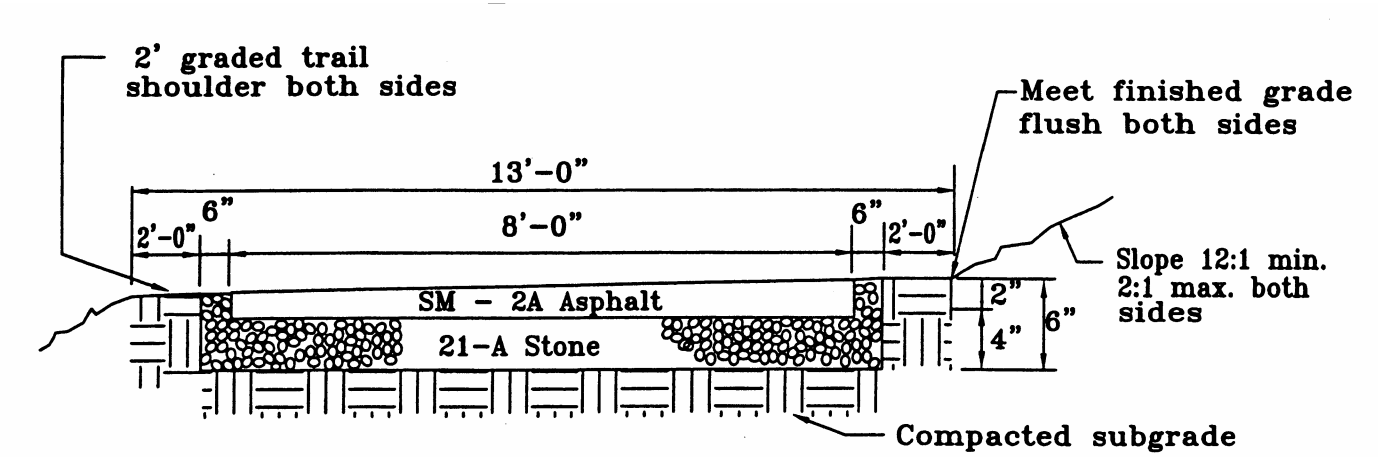

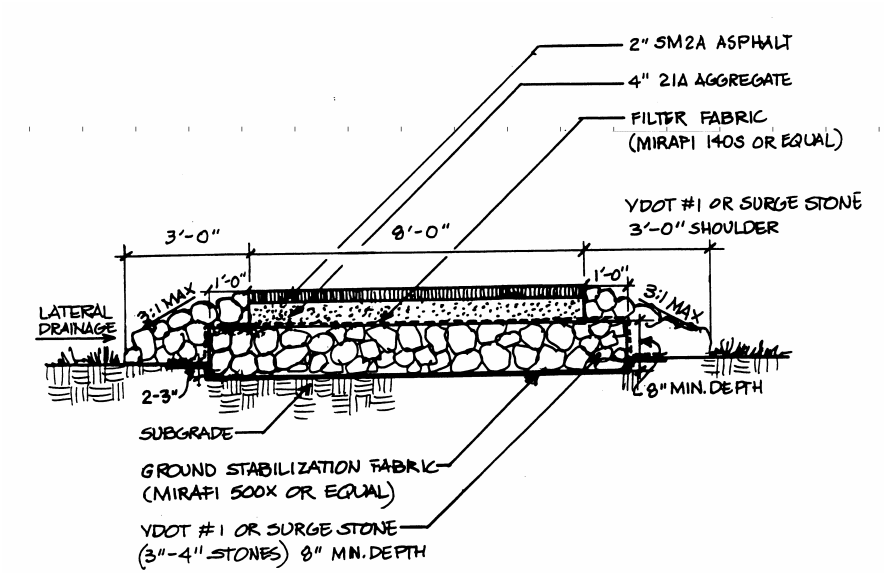

Asphalt Wet Trails - Average Width 8’ / 1000 LF

CONCRETE TRAILS – AVERAGE WIDTH OF 4 FT. (per 1,000 linear feet)

Small Section	
Maintenance Task	Replacing small section of trail (4' x 4'). *(Based upon .4% trail deterioration per 1000' per year, this ='s 16 sq. ft. or 4.0 l. ft.)*
Frequency	Repair 16 sq. ft. section (1 section 4' x 4' = 16 .0 sq,. ft.) Annually or As needed.
Standard	2.01 hrs. per 16 sq. ft. (or 2.01 hrs. per 16 sq. ft.)
Staff Hours	Supervisor 2.01 hr. Laborer 2.01 hr. Laborer 2.01 hr. Total 6.03 hrs.
Materials	*Note: Standards were developed with base material and asphalt topping consisting of::* *1. 4" Concrete* *2. 4" 21-A* Concrete 16 sq. ft. 4' x 4' x 4" = 9216 cu. in. (5.33 cu. ft. or .197 cu. yd.) of concrete. 5.33 cu. ft. (or .197 cu. yd.) of concrete per year. Stone 16 sq. ft. 4' x 4' x 4" = 9216 cu. in. (5.33 cu. ft. or .384 tons). Total of 5.33 cu. ft. (or .384 tons) of stone per year. Wood 5.3 cu. ft. wood form material.
Method	Remove old concrete/debris. Square edges of hole. Replace base and compress to grade as needed to meet PFM standard. Install wood form and anchor into place. Pour cement. Even surface of cement with float. Cover surface with plastic until dry. Carefully remove form. Clean up any excess cement and debris.
Capital Equipment	Pickup Truck Roller may not be required for Small section repairs; hand tamper or vibrator are adequate.

Concrete Trail – Average Width 4'/1,000 LF

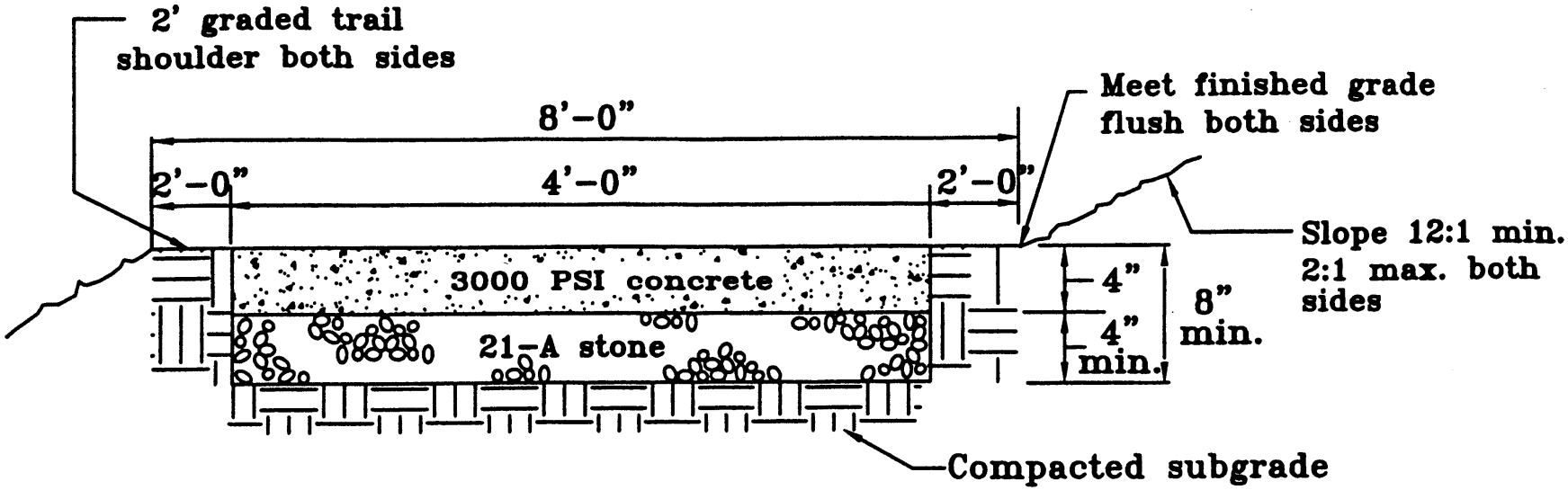

GRAVEL TRAILS – AVERAGE WIDTH OF 8 FT. (per 1,000 linear feet)

Pot hole repair	
Maintenance Task	Repair pot holes (12" x 12") of gravel trail. *(Based upon a 20% deterioration rate per 1000' per year, this ='s 1600 sq. ft. or 200 l. ft.)*
Frequency	Repair 4.0 sq. ft. *(400 pot holes 12" x 12' = 4 sq. ft. enlarged to 24" x 24' = 4 sq. ft.)*. Annually (or As needed)
Standard	.50 hr. per 4.0 sq. ft = 12" x 12" pot hole (or 150 hrs. per 1200 sq. ft.).
Staff Hours	Equipment Operator .50 hr. Laborer .50 hr. Total .50 hrs.
Materials	*Note: Standards were developed with base material and Bluestone Dust topping consisting of:* *1. 2" Bluestone Dust* *2. 4" 21-A base* Bluestone Dust 4.0 sq. ft. 24" x 24" x 2" = 1152 cu. in. (.67 cu ft. or .048 tons) of Bluestone Dust. 268 cu. ft (or 19.2 tons) of Bluestone Dust per year. Gravel 4.0 sq. ft. 24" x 24" x 4" = 2304 cu. in. (1.34 cu ft. or .096 tons) of 21 – A gravel. 536 cu. ft (or 38.4 tons) of 21 – A gravel per year.
Method	Remove old dust and gravel/debris. Square edges of hole. Even out surface and compact. Replace base stone and compress to grade as needed to meet PFM standard. Replace dust and compress even with trail surface.
Capital Equipment	Dump Truck Roller may not be required for Pot Hole repairs; hand tamper or vibrator are adequate.

GRAVEL TRAILS – AVERAGE WIDTH OF 8 FT. (per 1,000 linear feet)

Small section repair	
Maintenance Task	Repair small area (1' x 8') of gravel trail. *(Based upon a 20% deterioration rate per 1000' per year, this ='s 1600 sq. ft. or 200 l. ft.)*
Frequency	Repair 8.0 sq. ft. *(400 small sections 1' x 8' x 2" = 8 sq. ft.)*. Annually (or As needed)
Standard	1.00 hr. per 8.0 sq. ft = 1' x 8' small section (or 200 hrs. per 1600 sq. ft.).
Staff Hours	Equipment Operator 1.00 hr. Laborer 1.00 hr. Laborer 1.00 hr. Total 3.00 hrs.
Materials	*Note: Standards were developed with base material and stone topping consisting of:* *1. 2" Bluestone Dust* *2. 4" 21-A base* Bluestone Dust 8.0 sq. ft or 1' x 8' x 2" section (1.33 cu. ft. or .096 tons) of Bluestone Dust. 266 cu. ft. (or 19.2 tons) of Bluestone Dust per year. Gravel 8.0 sq. ft. or 1' x 8' x 4" section (2.66 cu. ft. or .192 tons) of 21-A. 532 cu. ft. (or 38.4 tons) of 21-A gravel per year.
Method	Remove old dust and gravel/debris. Even out dirt surface and compress. Replace base stone and compress to grade as needed to meet PFM standard. Replace dust and compress even with trail surface.
Capital Equipment	Dump Truck Bucket Loader Roller may not be required for Small section repairs; hand tamper or vibrator are adequate. Tractor York Rake implement

GRAVEL TRAILS – AVERAGE WIDTH OF 8 FT. (per 1,000 linear feet)

Maintenance Task	Resurfacing top 1” of trail per 1000’
Frequency	Annually
Standard	1.0 hrs. per 1000’
Staff Hours	Equipment Operator 1.0 hr. Equipment Operator 1.0 hr. Laborer .25 hr Laborer 1.0 hr. Total 3.25 hrs.
Materials	48 tons of Bluestone Dust (8’ x 1000’ x 1”)
Method	Dump Truck spread Machine grade Compact
Capital Equipment	Dump truck, Bucket Loader, York Rake, Roller

Gravel Trail Details – Average Width 8’ / 1,000’ LF

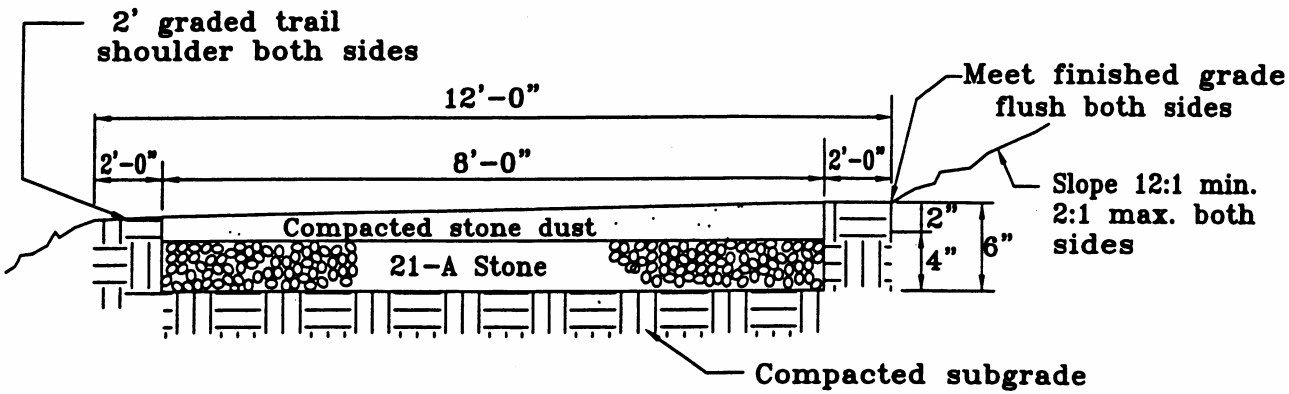

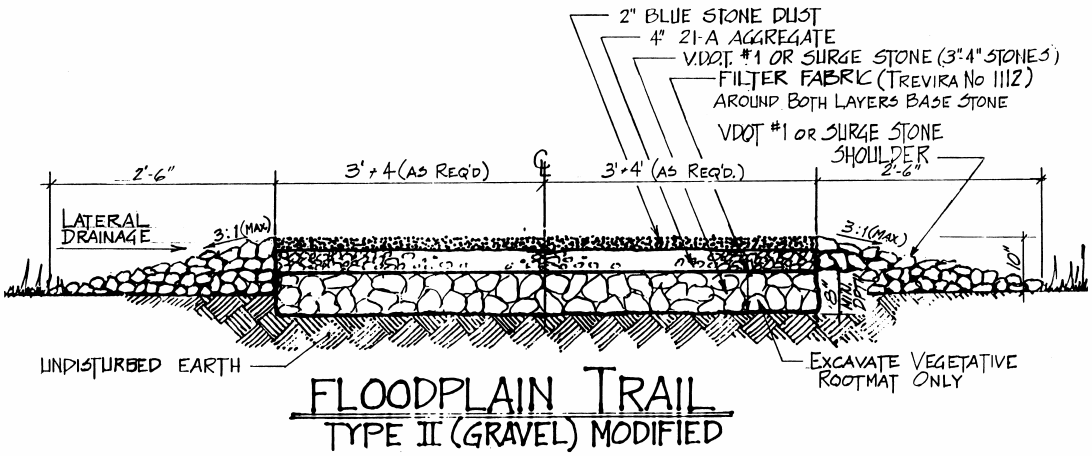

Gravel Wet Trails - Average Width 8’ / 1000 LF

NATURAL TRAILS – AVERAGE WIDTH OF 6 FT. (per 1,000 linear feet)

Small Section Repair	
Maintenance Task	Replacing small section of trail (1' x 6'). *(Based upon 5% trail deterioration per 1000' per year, this ='s 300 sq. ft. or 50 l. ft.)*
Frequency	Repair 6 sq. ft. section (50 sections 1' x 6' = 6 .0 sq,. ft.) Annually or As needed
Standard	.25 hr. per 6 sq. ft. (or 12.50 hr. per 300 sq. ft.)
Staff Hours	Equipment Operator .25 hr. Laborer .25 hr. Total .50 hrs.
Materials	*Note: Standards were developed with a 2" topping of fill dirt, laid over compacted natural dirt surface.* Fill dirt 1.0 cu. ft. per l. ft. (1' x 6') .111 tons 6 sq. ft. 1' x 6' x 2" = 1728 cu. in. (1.0 cu. ft. or .111 tons) of fill dirt. 50.0 cu. ft. (or 5.55 tons) of fill dirt per year. *(Fill any missing base using 1' x 1' x 2" = .0185 tons of fill dirt as a reference.)*
Method	Remove old dirt/debris to solid ground Fill surface depth of 2" with new dirt. Even out surface Compact even with trail surface.
Capital Equipment	Dump truck Roller may not be required for Small section repairs; hand tamper or vibrator are adequate.

NATURAL TRAILS – AVERAGE WIDTH OF 6 FT. (per 1,000 linear feet)

Large Section Repair	
Maintenance Task	Replacing large section of trail (50' x 6'). *(Based upon 5% trail deterioration per 1000' per year, this ='s 300 sq. ft. or 50 l. ft.)*
Frequency	Replace 300 sq. ft. Annually
Standard	.50 hr. per 300 sq. ft.
Staff Hours	Equipment Operator .50 hr. Laborer .50 hr. Laborer .50 hr. Total 1.50 hrs.
Materials	*Note: Standards were developed with a 2" topping of fill dirt, laid over compacted natural dirt surface.* Fill dirt 300 sq. ft. 6' x 50' x 2" = 86400 cu. in. (50.00 cu. ft. or 5.55 tons) of fill dirt per year. *(Fill any missing base using 1' x 1' x 2" = .0185 tons of fill dirt as a reference.)*
Method	Remove old dirt/debris to solid ground Spread with Dump truck Even out surface Compact to final grade of trail
Capital Equipment	Dump truck York Rake Tractor Roller

Natural Trails Detail – Average Width 6' / 1,000' LF

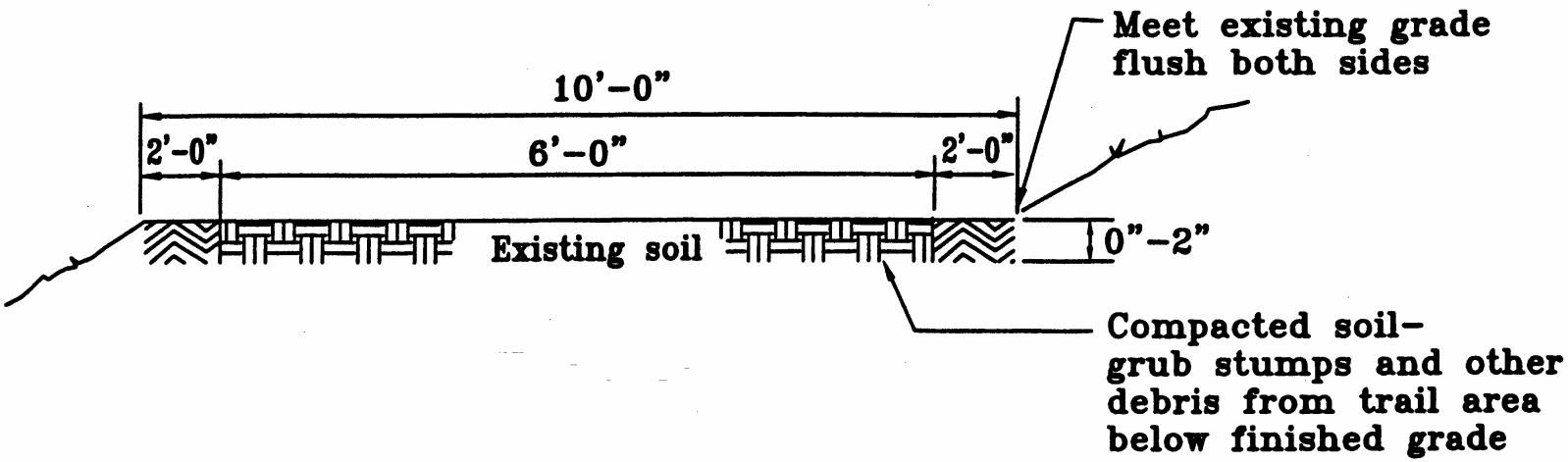

WOOD CHIP TRAILS – AVERAGE WIDTH OF 8 FT. (per 1,000 linear feet)

Small section repair	
Maintenance Task	Repair small area (1' x 8') of wood chip trail. *(Based upon a 40% deterioration rate per 1000' per year, this ='s 3200 sq. ft. or 400 l. ft.)*
Frequency	Repair 8.0 sq. ft. *(400 small sections 1' x 8' x 2" = 8 sq. ft.)*. Annually (or As needed)
Standard	1.00 hr. per 8.0 sq. ft = 1' x 8' small section (or 200 hrs. per 1600 sq. ft.).
Staff Hours	Equipment Operator .25 hr. Laborer .25 hr. Total .50 hrs.
Materials	*Note: Standards were developed with materials consisting of:* *1. 3" Wood Chips* *2. 4" 21-A base* Wood Chips 8.0 sq. ft or 1' x 8' x 3" section (2.0 cu. ft. or .074 cu. yd.) of Wood Chips. 800 cu. ft. (or 29.63 cu. yd.) of Wood Chips per year. Gravel 8.0 sq. ft. or 1' x 8' x 4" section (2.66 cu. ft. or .192 tons) of 21-A. 1064 cu. ft. (or 76.8 tons) of 21-A gravel per year.
Method	Remove old wood chips and gravel/debris. Even out dirt surface and compress. Replace base stone and compress to grade as needed to meet PFM standard. Replace wood chips and rake even with trail surface.
Capital Equipment	Dump Truck Roller may not be required for Small section repairs; hand tamper or vibrator are adequate.

WOOD CHIP TRAILS – AVERAGE WIDTH OF 8 FT. (per 1,000 linear feet)

Large section repair	
Maintenance Task	Repair small area (50' x 8') of wood chip l trail. *(Based upon a 40% deterioration rate per 1000' per year, this =' s 3200 sq. ft. or 400 l. ft.)*
Frequency	Repair 400 sq. ft. *(8 large sections 50' x 8' x 3" = 400 sq. ft.)*. Annually (or As needed)
Standard	.75 hr. per 400 sq. ft = 50' x 8' large section (or 6 hrs. per 3200 sq. ft.).
Staff Hours	Equipment Operator .75 hr. Equipment Operator .75 hr. Laborer .75 hr. Total 2.25hrs.
Materials	*Note: Standards were developed with materials consisting of:* *1. 3" Wood Chips* *2. 4" 21-A base* Wood Chips 8.0 sq. ft or 50' x 8' x 3" section (100 cu. ft. or 3.70 cu. yd.) of Wood Chips. 800 cu. ft. (or 29.60 cu. yd.) of Wood Chips per year. Gravel 8.0 sq. ft. or 1' x 8' x 4" section (2.66 cu. ft. or .192 tons) of 21-A. 1064 cu. ft. (or 76.8 tons) of 21-A gravel per year.
Method	Remove old wood chips and gravel/debris. Even out dirt surface and compress. Replace base stone and compress to grade as needed to meet PFM standard. Replace wood chips and rake even with trail surface.
Capital Equipment	Dump Truck Bucket Loader Roller Tractor York Rake implement

WOOD CHIP TRAILS – AVERAGE WIDTH OF 8 FT. (per 1000 linear feet)

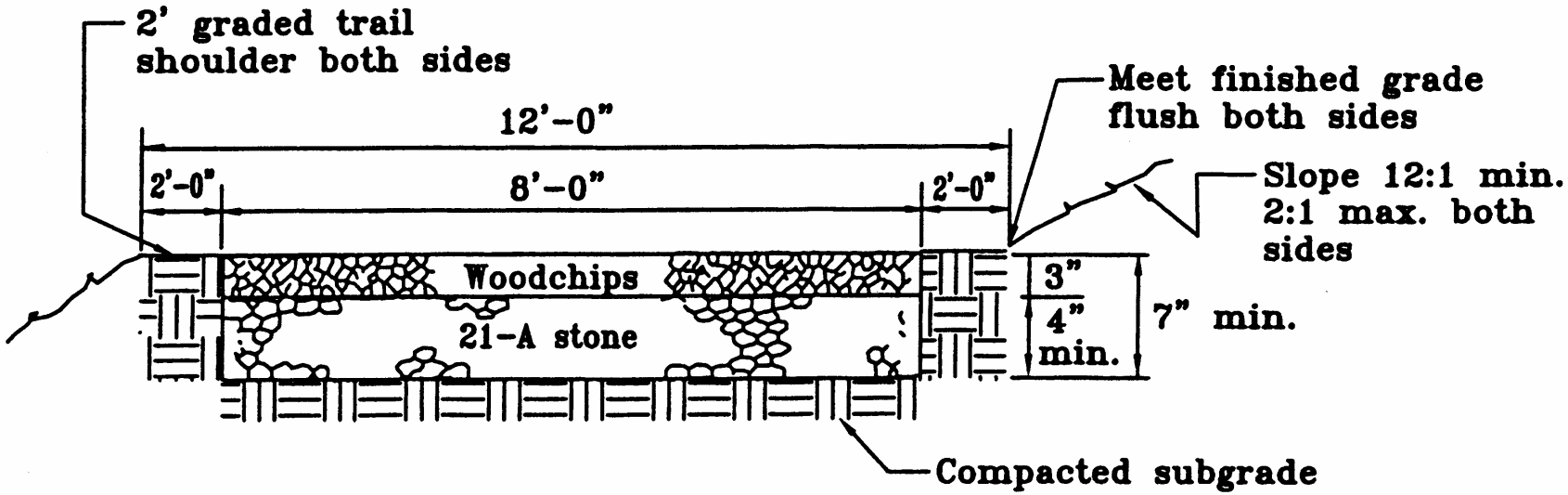

Appendix B
Routine Trail Tasks

Routine Trail Tasks are conducted on a frequent basis in order to upkeep a trail in good working condition. These tasks are an important element of trail maintenance to ensure safety and structural soundness of the trail system. Please see Trail Maintenance Standards for trail surface repair/replacement related maintenance.

RTT – 1
TRAIL INSPECTION (per 1,000 linear feet)

Inspection by Walking	
Maintenance Task	Inspection of trail by walking.
Frequency	Monthly
Standard	.2 hrs. per 1000 l. ft.
Staff Hours	Supervisor .2 hr. Total .2 hrs.
Materials	Clipboard, pen, and measuring tape.
Method	Walking the trail inspecting trail surface, shoulder areas, trees, culverts, bridges, fair weather crossings signage and amenities.
Capital Equipment	
Inspection by Driving	
Maintenance Task	Inspection of trail by driving.
Frequency	Monthly
Standard	.1 hrs. per 1000 l.. ft.
Staff Hours	Supervisor .1 hr. Total .1 hrs.
Materials	
Method	Driving the trail inspecting trail surface, shoulder areas, trees, culverts, bridges, fair weather crossings, signage and amenities.
Capital Equipment	Pickup truck or off road utility vehicle.

RTT – 2

MOWING (per 1,000 linear feet)

Mowing Hard Surface Trails (Asphalt, Concrete, Gravel/Stonedust)	
Maintenance Task	Control of grass encroachment along trail.
Frequency	3 Times annually (Spring, Summer & Fall).
Standard	.5 hrs. per 1000 l. ft.
Staff Hours	Equipment Operator .25 hr. Laborer .25 hr. Total .50 hrs.
Materials	
Method	Mow along trail 3 ft. to 5 ft. Blow off trail off grass clippings.
Capital Equipment	2 Tractor Bush-hog implement Fairway blower implement
Mowing Natural Trails (Dirt)	
Maintenance Task	Mowing
Frequency	Every 30 days (or As needed)
Standard	.25hrs. per 1000 l. ft.
Staff Hours	Equipment Operator .25hr. Total .25 hrs. (Note: If using Bush-hog, then double staff hours)
Materials	
Method	Tractor mounted 8' Flail mower unit (OR tractor Bush-hog implement 5' – 6' wide)
Capital Equipment	Tractor

RTT – 3

TREE and BRUSH PRUNING (per 1,000 linear feet)

Tree and Brush Pruning	
Maintenance Task	Control of tree and brush encroachment along trail.
Frequency	Twice annually.
Standard	.5 hrs. per 1000 l. ft.
Staff Hours	Laborer .5 hr. Laborer .5 hr. Total 1.0 hr.
Materials	
Method	Cut down trees and prune limbs in accordance with Park Authority procedures. Trim brush at least 1 foot beyond 8' trail edges and having a 10' clearance the width of the trail and 1 foot shoulders. Put cutting deep into woods (or haul away as terrain permits). Blow off trail of debris generated by tree and brush control.
Capital Equipment	Pick up truck (or Off road utility vehicle) Chain saw Pole chain saw Brush cutter Blower (backpack or push)

Trail Clearance

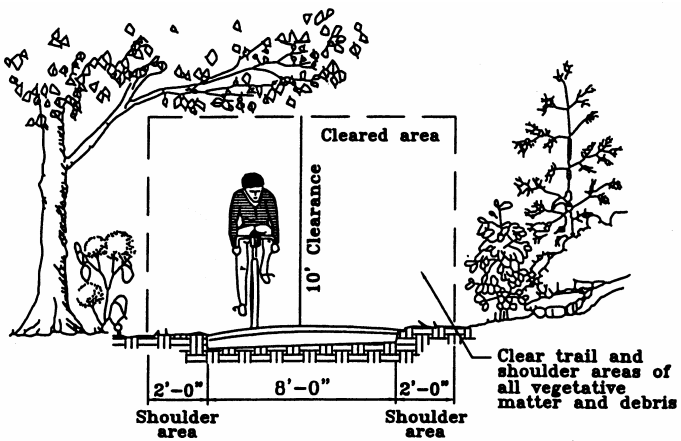

Asphalt and Gravel Trails

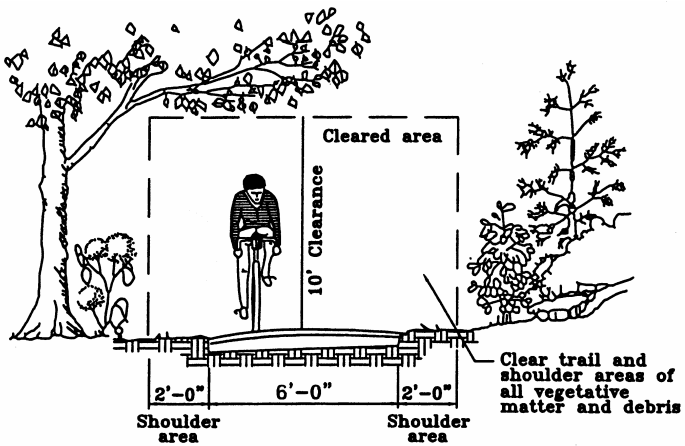

Natural Trails

RTT – 4

LEAF & DEBRIS REMOVAL (per 1,000 linear feet)

Leaf & Debris Removal	
Maintenance Task	Leaf and debris removal.
Frequency	Annually (late Fall) or As needed.
Standard	.25 hr. / 1000 l. ft.
Staff Hours	Laborer. .25 hr. Total .25 hr.
Materials	
Method	Tractor mounted blower driven one pass in each direction (as terrain permits)
Capital Equipment	Tractor Fairway blower implement

RTT – 5

SNOW and ICE REMOVAL (per 1,000 linear feet)

Snow and Ice Removal on trails to schools	
Maintenance Task	Remove snow and apply ice-melt to trails providing access to schools
Frequency	As needed.
Standard	.5 hrs. per 1000 l. ft.
Staff Hours	Laborer .5 hr. Laborer .5 hr. Total 1.0 hr.
Materials	
Method	Shovel or use snow blower to remove snow from width and length of trail. Place snow in best location along trail to eliminate, or reduce, the formation of puddles on trail surfaces snow melts. Apply even layer of ice-melt (salt, de-icer). Repeat steps as weather conditions indicates need.
Capital Equipment	Pick up truck (or Off road utility vehicle) Bucket Loader

RTT – 6

CLEANING and REPAIR of CULVERTS (per 1,000 linear feet)

Cleaning and Repair of Culvert Pipes	
Maintenance Task	Cleaning and replacement of Culvert pipes
Frequency	As needed.
Standard	1.0 hrs. per 1000 l. ft. for Cleaning, 1.5 hrs. per 1000 l. ft. for Repair
Staff Hours	Cleaning Equipment Operator 1.0.hr. Laborer 1.0 hr. Laborer 1.0 hr. Total 3.0 hr. Repair Equipment Operator 1.5.hr. Laborer 1.5 hr. Laborer 1.5 hr. Total 4.5 hr.
Materials	VA-21A gravel Trail surface material (Dirt, Stonedust, Wood Chip, Asphalt, or Cement) Steel end aprons (or end wall materials for ends of culvert pipe)
Method	Cleaning Shovel, or use back-hoe, to remove debris from each end of culvert pipe. Remove debris buildup along the bottom of (or any blockages in) culvert pipe with shovels, and/or blowers. Haul debris away from culvert pipe. Repair Damn, or divert, the down stream water flow into the culvert pipe; or wait until low water level. Repair any erosion spots around culvert pipe ends resulting from water being diverted around pipe. Remove eroded trail surface and base materials from damaged areas around the culvert pipe. Replace, if damaged, the steel end aprons. Re-construct damaged cement, asphalt, rip-rap, or wooden end wall structures connected to ends of culvert pipe. Fill around exposed culvert pipe with VA21-A gravel and compact. Additional materials of surge or Rip-Rap maybe needed to control erosion around the culvert pipe. Replace trail base material lost from erosion and compact. Replace trail surface material lost from erosion and compact. Clean up all excess debris. Re-establish flow through culvert pipe, if diverted or damned.
Capital Equipment	Pick up truck (or Off road utility vehicle) Dump truck Bucket Loader

RTT – 7

MAINTENANCE of WATER CROSSINGS (per 1,000 linear feet)

Maintenance of Water Crossings	
Maintenance Task	Maintenance of Water Crossing
Frequency	As needed.
Standard	1.0 hrs. per 1000 l. ft.
Staff Hours	Equipment Operator 1.0 hr. Laborer 1.0 hr. Laborer 1.0 hr. Total 3.0 hr.
Materials	VA-21A gravel Surge Rip-Rap Cement Asphalt
Method	Divert water flow for area to be maintained. Expose and clean out area eroded along water crossing edge. Fill with VA-21A gravel, surge or rip-rap as needed to reduce or eliminate future erosion. Expose and clean out area eroded along sides of water crossing that connect to trail. Replace missing material with VA-21A gravel and compact. Replace missing or damaged surface material (dirt, asphalt, or cement) of trail surface connecting to low water crossing and compact as needed. Re-establish water flow across low water crossing
Capital Equipment	Pick up truck (or Off road utility vehicle) Dump Truck Bucket Loader

RTT – 8

REPAIRS to SIGNS and OTHER AMENITIES (per 1,000 linear feet)

Repair of Signs and Other Amenities	
Maintenance Task	Repair of Signs and Other Amenities
Frequency	As needed.
Standard	.5 hrs. per 1000 l. ft.
Staff Hours	Laborer .5 hr. Laborer .5 hr. Total 1.0 hr.
Materials	Signs, posts, and/or bench or picnic table boards
Method	Replace or tighten any loose bolts. Straighten posts to signs. Stain sign posts, picnic table and bench boards. Replace damaged posts or boards and stain. Replace unreadable or damaged signs.
Capital Equipment	Pick up truck (or Off road utility vehicle)

Appendix C
Glossary

Access Points: Designated areas and passageways that allow the public to reach a trail from adjacent streets or community facilities.

Access Trail: Any trail that generally connects the main trail to a road or another trail system.

Accessible: A term used to describe a site, building, facility, or trail that complies with the Americans with Disabilities Act (ADA) Accessibility Guidelines and can be approached, entered, and used by people with disabilities.

Acquisition: The act or process of acquiring fee title or interest of real property.

Adopt-A-Park: A program in which groups or businesses "adopt" parks or certain areas or amenities of parks, providing volunteer work parties at periodic intervals to help maintain the park. Though no special privileges are granted, the agency generally acknowledges that a park has been "adopted" by erecting signs saying the park is part of an Adopt-A-Park program and including the name of the adopter.

Alignment: The layout of the trail in horizontal and vertical planes. This is to say, the bends, curves, and ups and downs of the trail. The more the alignment varies, the more challenging the trail.

Amenities: Any element used to enhance the user's experience and comfort along a trail.

Americans with Disabilities Act of 1990: A federal law prohibiting discrimination against people with disabilities. Requires public entities and public accommodations to provide accessible accommodations for people with disabilities.

Archaeological Resources (Cultural, Heritage): Any material of past human life, activities, or habitation that are of historic or prehistoric significance. Such materials include, but are not limited to, pottery, basketry, bottles, weapon projectiles, tools, structures, pit houses, rock paintings, rock carvings, graves, skeletal remains, personal items and clothing, household or business refuse, or any piece of the foregoing.

Archaeological Site: A site with a concentration of material remains of past human life or activities that is of historic or prehistoric significance and that has been surveyed by a qualified archeologist.

Asphalt: Petroleum-based surface material, mixed with crushed stone or gravel that provides a smoothly paved surface suitable for wheeled transportation – bicycles, in-line skates, and strollers. Used primarily for bicycle paths and areas subject to erosion and flooding.

Bank (Embankment): The part of the soil next to a stream, lake, or body of water where the soil elevation adjacent to the water is higher than the water level.

Barricade: A portable or fixed barrier, used to close all or a portion of the trail right-of-way to traffic.

Base: The primary excavated bed of a trail upon which the tread, or finished surface lies.

Bench: A long seat (with or without a back) for two or more people

Berm: The ridge of material formed on the outer edge of the trail that projects higher than the center of the trail tread.

Boardwalk: A fixed planked structure, usually built on pilings in areas of wet soil or water to provide dry pathways.

Bikeways: Any road, path, or way which in some manner is specifically designated as being open to bicycle travel, regardless of whether such facilities are designated for the exclusive use of bicycles or are to be shared with other transportation modes.

Bollard: A barrier post, usually 30 to 42 inches in height, used to block vehicular traffic at trail access points. Should be installed in odd numbers (one or three).

Bridge: A structure, including supports, erected over a depression (stream, river, chasm, canyon, or road) and having a deck for carrying trail traffic. If the bridge is over two feet above the surface, it should have railings.

Brush: Vegetation or small flora.

Buffer (Buffer Zone): Any type of natural or constructed barrier (like trees, shrubs, or wooden fences) used between the trail and adjacent lands to minimize impacts (physical or visual).

Classification: The designation indicating intended use and maintenance specification for a particular trail.

Clear-cut: Removal of all trees and shrubs, not just mature growth.

Clearing: Removal of windfall trees, uproots, leaning trees, loose limbs, wood chunks, etc. from both the vertical and horizontal trail corridor.

Clearing height (Vertical Clearance): The vertical dimension that must be cleared of all tree branches and other obstructions that would otherwise obstruct movement along the trail.

Clearing Limit: The outer edges of clearing areas (cleared of trees, limbs, and other obstructions) as specified by trail use.

Compaction: The compression of aggregate, soil, or fill material into a more dense mass by tamping.

Concrete: A composition of coarse and fine aggregates, cement, and water, blended to give a hard, unyielding, nearly white pavement, which can be finished to any degree of smoothness. Concrete is most often used in urban areas with anticipated heavy trail use, or in areas susceptible to flooding.

Connectivity: The ability to create functionally contiguous blocks of land or water through linkage of similar native landscapes; the linking of trails, greenways, and communities.

Conservation: Controlled use and protection of natural resources.

Construct (Construction): Building a trail where no trail previously existed.

Creek: Those areas where surface waters flow sufficiently to produce a defined channel or bed.

Crosswalk: Any portion of a roadway distinctly indicated for pedestrian crossing by lines or other markings on the surface.

Culvert, Cross Drainage: Pipe or box-like construction of wood, metal, plastic, or concrete that passes under a trail to catch surface water from side ditches and direct it away from a trail.

Curb Cut: A cut in the curb where a trail crosses a street. The curb cut should be the same width as the trail or wider.

Cut and Fill: The process of removing soil from one area and placing it elsewhere to form a base for any given activity.

Daylighting: Clearing a ditch or drain so that water can run freely, or to "daylight."

Deadfall: A tangled mass of fallen trees or branches.

Debris: Any undesirable material that encroaches on a trail and hinders the intended use.

Designated Trail: A trail that is approved and maintained by an agency.

Disturbed Area: Area where vegetation or topsoil has been removed, or where topsoil, spoil, or waste has been placed.

Ditch: A long, narrow trench used to improve drainage.

Down Tree: Fallen tree that blocks the trail.

Downslope: The downhill side of a trail.

Drainage, Cross: Running water in swamps, springs, creeks, drainage, or draws that the trail must cross.

Drainage, Sheet: Desirable condition in which water flows in smooth sheets rather than rivulets; slower flow and less concentration result in less erosion.

Drainage Ditch (Ditching): Open ditches running parallel to the trail tread that collect water and carry it away from the site. A drainage ditch is also an element of water-bar, providing an escape route for water diverted from trail by the bar.

Drawings: Documents showing details for construction of a trail or trail-related facility, including but not limited to straight-line diagrams, trail logs, standard drawings, construction logs, plan and profile sheets, cross-sections, diagrams, layouts, schematics, descriptive literature, and similar materials.

Drop-off: Slope that falls away steeply.

Easement: Grants the right to use a specific portion of land for a specific purpose or purposes. Easements may be limited to a specific period of time or may be granted in perpetuity; or the termination of the easement may be predicated upon the occurrence of a specific event. An easement agreement survives transfer of land ownership and is generally binding upon future owners until it expires on its own terms.

Easement- Conservation: Places permanent restrictions on property in order to protect natural resources.

Easement- Construction: An additional temporary area or corridor needed to construct a trail or facility.

Easement- Maintenance: An additional permanent area or corridor (not open to the public) needed to maintain trail drainage, foliage, and recurring maintenance needs.

Ecosystem: A system formed by the interaction of living organisms, including people, with their environment. An ecosystem can be of any size, such as a log, pond, field, forest, or the earth's biosphere.

Elevation: The height of a place above sea level

Embankment: Structure made from soil used to raise the trail, rail-bed, or roadway above the existing grade.

Eminent Domain: The authority of a government to take (usually by purchase) private property for public use.

Endangered Species: A species of animal or plant is considered to be endangered when its prospects for survival and reproduction are in immediate jeopardy from one or more causes.

Erosion: Natural process by which soil particles are detached from the ground surface and moved downslope, principally by the actions of running water (gully, rill, or sheet erosion). The combination of water falling on the trail, running down the trail, and freezing and thawing, and the wear and tear from traffic create significant erosion problems on trails.

Erosion Control: Techniques intended to reduce and mitigate soil movement from water, wind, and trail user traffic.

Exotic Species (alien): A plant introduced from another county or geographic region outside its natural range.

Fairweather Crossing: A stream crossing consisting of a concrete bottom and side ramps into the stream, with concrete pillars above the normal water flow. The crossing is inundated during floods, but usable by pedestrians during normal stream flow.

Fauna: The animal populations and species of a specified region.

Feeder Trail: A trail designed to connect local facilities, neighborhoods, campgrounds, etc. to a main trail.

Flagging: Thin ribbon used for marking during the location, design, construction, or maintenance of a trail project.

Floodplain: The flat, occasionally flooded area, bordering streams, rivers, or other bodies of water, susceptible to changes in the surface level of the water.

Flora: The plant populations and species of a specified region.

Footpath: A path over which the public has a right-of-way on foot only. Wheelchairs are also permitted, although this may not be practical due to surface or slope.

Ford: A natural water level stream crossing; which can be improved (aggregate mix or concrete) to provide a level, low velocity surface for trail traffic.

Gabion Baskets: Rectangular containers (usually made of heavy galvanized wire) that can be wired together, and then filled with stones to make quick retaining walls for erosion control.

Geographic Information System (GIS): A spatial database mapping system (computer and software) that contains location data for trails and other important features.

Geo-textile: A semi-impervious non-woven petrochemical fabric cloth that provides a stable base for the application of soil or gravel. Most common use is in the construction of turnpikes.

Global Positioning System (GPS): A system used to map trail locations using satellites and portable receivers. Data gathered can be downloaded directly into GIS database systems.

Grade: Slope expressed as a percentage (feet change in elevation for every 100 horizontal feet, commonly known as "rise over run"). A trail that rises 8 vertical feet in 100 horizontal feet has an 8% grade. Grade is different than angle; angle is measured with a straight vertical as 90° and a straight horizontal as 0°. A grade of 100% would have an angle of 45°.

Graffiti: Any writing, printing, marks, signs, symbols, figures, designs, inscriptions, or other drawings that are scratched, scrawled, painted, drawn, or otherwise placed on any surface of a building, wall, fence, trail tread, or other structure on trails or greenways and which have the effect of defacing the property.

Grate: A framework of latticed or parallel bars that prevents large objects from falling through a drainage inlet, but permits water and some sediment to fall through the slots.

Gravel: Soil particles ranging from 1/5 to 3 inches in diameter.

Green Infrastructure: The sum of the public and private conservation lands including native landscapes and ecosystems, greenspaces, and waters.

Greenway: A linear open space established along a natural corridor, such as a river, stream, ridgeline, rail-trail, canal, or other route for conservation, recreation, or alternative transportation purposes. Greenways can connect parks, nature preserves, cultural facilities, and historic sites with business and residential areas.

Habitat: A place that supports a plant or animal population because it supplies that organism's basic requirements of food, water, shelter, living space, and security.

Hazard Tree (Widow Maker): Tree or limb that is either dead, or has some structural fault, that is hanging over, or leaning towards the trail or sites where people congregate.

Hydrology: The properties, distribution and circulation of water on the surface of the land, in the soil and underlying rocks, and in the atmosphere

Impacts: Encompasses all physical, ecological, and aesthetic effects resulting from the construction and use of trails (both negative and positive). Many studies have been concerned with environmental and social impacts of different users, such as tread wear, littering, conflicts between users, or vandalism.

Impervious Surface: Hard surfaces that do not allow absorption of water into the soil and that increase runoff. Examples of such surfaces include concrete or asphalt paved trails and parking areas.

Infrastructure: The facilities, utilities, and transportation systems (road or trail) needed to meet public and administrative needs.

Interpretation: Communicating information about the natural and/or cultural resources and their associated stories and values found at a specific site or along a trail. Tours, signs, brochures, and other means can be used to interpret a particular resource.

Interpretive Sign or Display: An educational sign or display that describes and explains a natural or cultural point of interest on or along the trail.

Interpretive Trail: Short to moderate length trail (1/2 to 1 mile) with concentrated informational stops to explain associated views, natural flora and fauna, and other features.

Invasive Exotic: Non-native plant or animal species that invades an area and alters the natural mix of species.

Kiosk (Sign): A freestanding bulletin board housing informational or interpretive displays.

Loam: An easily crumbled soil consisting of mixture of clay, silt, and sand.

Loop Trail: Trail systems designed so that the routes form loops, giving users the option of not traveling the same section of trail more than once on a trip.

Lyme Disease: An infection caused by a spiral-shaped bacterium called a spirochete carried by deer ticks. Symptoms associated with the early stages--fever, headache, stiffness, lethargy, and myriad other mild complaints--are often dismissed as the flu.

Marsh: An area of wet or periodically submerged land, generally treeless and usually characterized by grasses and other low vegetation.

Master Plan: A comprehensive long-range plan intended to guide development (including trails) of a park. Includes analysis, recommendation, and proposals of action.

Meadow: Tract of grassland.

Multi-Use Trail: A trail that permits more than one user group at a time (equestrian, hiker, mountain bicyclist, etc.).

Native Species: An indigenous species (a basic unit of taxonomy) that is normally found as part of a particular ecosystem; a species that was present in a particular area at the time of the Public Land Survey (1847-1907)

Natural Surface (Trail): A tread made from clearing and grading the native soil with no added surfacing materials.

Nature Trail: Moderate length trail (less than or equal to 2 miles) with primary function of providing an opportunity to walk and study interesting or unusual plants or natural features at user's pleasure. The ideal nature trail has a story to tell. It unifies the various features or elements along the trail into a related whole.

Non-motorized: Trail recreation by modes such as bicycle, pedestrian, equestrian, skates, ski, etc.

Noxious Plant: Plant that poses a hazard to humans or animals, such as poison oak or ivy, cacti, stinging nettles, etc.

Obstacles: Physical objects large enough to significantly impede or slow travel on a trail. Logs, large rocks, and rock ledges are common obstacles.

Organic soil: Soil that is made up of leaves, needles, plants, roots, bark, and other organic material in various stages of decay, and has a large water/mass absorption ratio.

Outcrop: A rock formation that protrudes through the level of the surrounding soil.

Path (Pathway): This is a temporary or permanent area that is normally dirt or gravel, although some paths are asphalt or concrete. A path typically indicates the common route taken by pedestrians between two locations.

Pavement: That part of a trail having a constructed hard paved surface for the facilitation of wheeled trail traffic.

Pedestrian: Any person traveling by foot, or any mobility-impaired person using a wheelchair, whether manually operated or motorized.

Plan and Profile Sheets: Drawings (usually prepared for trail construction) used to record horizontal and vertical geometry of a trail alignment as well as other required improvements to the trail corridor.

Pond: Still body of water smaller than a lake.

Prescribed Burn: Formally called "controlled burns," these are periodic, intentional fires conducted to clear underbrush in an effort to control "wildfire," open areas to wildfire, and promote germination of some species of flora.

Preservation: Maintaining an area or structure intact or unchanged.

Ravine: Deep, narrow gouge in the earth's surface, usually eroded by the flow of water.

Re-bar: Steel-reinforcing rod that comes in a variety of diameters, useful for manufacturing pins or other trail anchors.

Rehabilitation: All work to bring an existing trail up to its classification standard, including necessary relocation of minor portions of the trail.

Relocation (Realignment, Reroute): To alter the path of an existing trail to better follow land contours, avoid drainage sites, bypass environmentally sensitive areas, improve views, or for other landowner or management reasons.

Revegetation: Process of restoring a denuded and/or eroded area close to its original condition.

Right of Way: A strip of land held in fee simple title, or an easement over another's land, for use as a public utility for a public purpose. Usually includes a designated amount of land on either side of a trail that serves as a buffer for adjacent land uses.

Rip-rap: A layer of stones placed randomly on a bank to provide support and prevent erosion; also the stone so used.

Runoff: Water not absorbed by the soil that flows over the land surface.

Sidewalk: A paved strip (typically concrete four to six feet in width) which runs parallel to vehicular traffic and is separated from the road surface by at least a curb and gutter. Sidewalks are common in urban areas and in suburban residential areas.

Silt Fence: Temporary sediment barrier consisting of filter fabric, sometimes backed with wire mesh, attached to supporting posts and partially buried.

Slope: Rising or falling ground.

Social Trail (Footpath, Informal): Unplanned/unauthorized trails that develop informally from use and are not designated or maintained by an agency; often found cutting switchbacks, between adjacent trails, or from nearby neighborhoods.

Soil Stabilization: Measures that protect soil from the erosive forces of raindrop impact and flowing water. They include, but are not limited to, vegetative establishment, mulching, and the application of soil stabilizers to the trail tread.

Specifications: Written standards of work and type of materials to which trails (tread, clearing, grade) and trail structures (bridge, culvert, puncheon) are built and maintained according to type of use.

Stream: Small body of running water moving in a natural channel or bed.

Stream Crossing: A structure designed to provide a dry crossing of a body of running water, such as a bridge, fairweather crossing, or open-bottomed culvert crossing.

Structure: Anything constructed or erected that requires location on the ground such a bridge, wall steps, etc. on or near a trail.

Sub-base: On paved trails the sub-base lies between the sub-grade and the trail surface, and serves as a secondary, built foundation for the trail surface (concrete or asphalt). The purpose of the sub-base is to transfer and distribute the weight from the trail surface to the sub-grade. The sub-base consists of four-to six-inch graded aggregate, which provides bearing strength and improves drainage.

Sub-grade: Is the native soil mass that makes up the primary foundation of the trail that supports the tread surface. Topography, soils, and drainage are the key factors comprising the sub-grade.

Surfacing: Material placed on top of the trail-bed or base course that provides the desired tread. It lessens compaction of soil, provides a dry surface for users, and prevents potential erosion and abrasion.

Survey: A physical field assessment of the trail or proposed trail, to determine alignment, maintenance tasks, hazards, impact, etc., prior to work, or as part of ongoing trail maintenance.

Swale: A linear low-lying natural topographic drainage feature running downhill and crossing the trail alignment in which sheet runoff would collect and form a temporary watercourse. A low-lying ground drainage structure (resembling a swale) can be constructed to enhance drainage across the trail.

Swamp: A piece of wet, spongy land; bog, marsh.

Switchback: A sharp turn in a trail (usually constructed on a slope of more than 15%) to reverse the direction of travel and to gain elevation. The landing is the turning portion of the switchback. The approaches are the trail sections upgrade and downgrade from landing.

System: Set of interconnected components that function as a whole and thereby achieves a behavior or performance that is different than the sum of each of the components taken separately.

Terminus: Either the beginning or end or a trail.

Toe: The break in slope at the foot of a bank where the bank meets the bed.

Topography (Topo): The elevation and slope of the land as it exists or is proposed. It is represented on drawings by lines connecting points at the same elevation. Typically illustrated by dashed lines for existing topography and solid lines for proposed.

Trail: Linear route on land or water with protected status and public access for recreation or transportation purposes such as walking, jogging, hiking, bicycling, horseback riding, mountain biking, canoeing, kayaking, and backpacking.

Trailhead: An access point to a trail often accompanied by various public facilities, such as parking areas, restrooms, water, kiosk, and directional and informational signs.

Tread Width: The width of the portion of the trail used for travel.

Trespasser: Person who uses property without the owner's implied or stated permission and not for the benefit of the property owner. Due the least duty of care and therefore pose the lowest level of liability risk.

True North: The direction toward the geographic North Pole. Most maps are oriented to True North.

Understory: All forest vegetation growing under the canopy or upper layers of forest vegetation.

Volunteer: Person who works on a trail or for an organization without pay.

Waterbar: A drainage structure (for turning water) composed of an outsloped segment of tread leading to a barrier placed at 45° angle to the trail; usually made of logs, stones or other aggregate material. Water flowing down the trail will be diverted by the outslope or, as a last resort, by the barrier. Grade dips are preferred on multi-use trails instead of waterbars.

Watershed: A region or area bounded peripherally by a water parting formation (i.e. ridge, hill, mountain range) and draining ultimately to a particular watercourse or body of water.

Wetland(s): A lowland area, such as a marsh or swamp, which is saturated with water, creating a unique, naturally occurring habitat for plants and wildlife.

Weir: A natural dam.

Wildlife: Any non-domesticated animal species living in its natural habitat.

Wing: Angled barriers at a bridge approach used to channel traffic and prevent trail users from inadvertently plunging over embankment.

Wood Chips: Chipped wood, often available from tree trimming operations; produces a soft, spongy trail surface, and is used on many nature trails.

Zero-Mile Mark: The point at which a measured trail starts.

Zoning: Specifying use or restrictions on land. Zoning can effectively protect trail corridors from development adjacent to the trail that might block views, destroy sensitive habitat, create traffic problems, and generally diminish a trail experience.

These trail terms were modified from information compiled and edited by Jim Schmid in "Trails Primer" Ó 2001. The book was published by the South Carolina Department of Parks, Recreation and Tourism. Used by permission.

Appendix D
Additional Reference Material

Appendix D contains the following reference documents that relate to the Park Authority's *Guide to Trail Management*

- FCPA Policy 101.3-
  Greenways, Including Stream Valleys

- FCPA Policy 103.2-
  Trails

Policy 101.3 Greenways, Including Stream Valleys

The Fairfax County Park Authority shall provide leadership for establishment and management of an integrated network of Greenways within the County to conserve open space, to protect sensitive environmental and cultural resources including wildlife habitat, riparian corridors, water quality, archaeological and historic sites and aesthetic values, to control flooding and erosion, and to provide continuity of non-motorized access between places where citizens and visitors live, work and play.

As defined in the Countywide Policy Plan, Greenways are "linear open space corridors which include and connect, parks and recreation sites, areas of significant and sensitive ecological and heritage (cultural) resource value, wildlife habitats, riparian corridors and Countywide trails with each other and with residential communities, employment and commercial areas and transit destinations. Designated Greenways may be comprised of one or several components which will provide the desired resource protection and/or continuity of non-motorized access to destinations throughout the County. They may be established along natural corridors such as Environmental Quality Corridors, along scenic roadways, urban sidewalks and plazas, or other natural or landscaped courses for pedestrian, bicycle or equestrian passage. In addition to publicly accessible parklands and trails, Greenways may also incorporate private open space managed for the protection of significant natural and heritage (cultural) resources under voluntary agreements with property owners."

The Park Authority shall coordinate the establishment of the Countywide network of Greenways in accordance with the following guidelines:

1. Identify, plan and develop Greenways in cooperation with other county, regional, state and federal agencies with jurisdiction within Fairfax County, pertinent citizen advisory groups and civic organizations, local businesses, and landowners. Institute and facilitate a "Greenways Partnership" to enhance recognition of, and communication between, cooperators.

2. Ensure the preservation, protection and appropriate management of significant and sensitive environmental, ecological and cultural resources within Greenways through conformance with policies, standards and criteria identified in the Park Authority's Natural Resources, Cultural Resources and Greenways Programs as set forth in the Park Comprehensive Plan and supporting documents.

3. In accordance with adopted Greenway Plans, acquire designated parcels necessary to complete the Greenways, especially those segments of Environmental Quality Corridors (EQCs) needed to complete the publicly accessible Stream Valley Parks.

4. Where land acquisition may not be feasible or desirable, work with landowners to protect identified resources, and provide public access where appropriate, throughvoluntary means such as conservation and trail easements and/or cooperative agreements,

5. identify roadside segments of the Countywide Trails Plan which comprise Greenway trail routes outside of public park lands and which are necessary to provide continuity of access throughout and between designated Greenways. Ensure that these segments are incorporated into Fairfax County and Commonwealth of Virginia transportation plans and developed and maintained through appropriate agencies outside the Park Authority.

The Greenways Program is grounded in the Stream Valley Park Plan, first adopted by the Fairfax County Park Authority in May 1973, and subsequently adopted by the Board of Supervisors as the basis for the Environmental Quality Corridor system. The Stream Valley Park Plan has played a major role in shaping development patterns in Fairfax County. The conditions that led to the creation of the Stream Valley Park system in 1973 were strikingly similar to those 25 years later that led to the Greenways Program, and there is a strong continuity in planning rationale. As stated in the Introduction of that historic document:

> "Fairfax County lies on the fall line of the Piedmont Plateau and the Coastal Plain. The most prominent physiographic features are the valleys...[which] have structured the growth of the County since historic times and channeled commerce and development along the ridges leaving the valleys, for the most part, in their natural state.
>
> "It is a valid planning concept today to use natural topographic features to structure growth, but advanced technology in earth moving equipment and the pressures of development are producing an increasing disregard for natural barriers, and development is encroaching upon the valleys to an alarming degree with disastrous consequences, as evidenced in the Cameron Rum and Holmes Run-Tripps Run Watersheds."

The rapid growth of the 1960s prompted John Mastenbrook, representing the Fairfax County Federation of Citizen Associations, and Ella Mae Doyle, Park Authority Chairman, to formally request the Board of Supervisors to authorize a stream valley study. Subsequently, Barbara Hildreth, representing the County Trails Committee, influenced the incorporation of the trails element into the Stream Valley Plan, and the Environmental Quality Advisory Committee reviewed the study committee's findings. (John Mastenbrook was appointed to the Park Authority Board in 1967 and served until 1990).

The U.S. Capper-Cromton Act provided funding for conserving stream valleys in the urbanizing Metropolitan Area to protect the land and water resources of the Potomac watershed. The stream valley study committee found that, while Maryland and the District of Columbia had taken full advantage of the Act, "Fairfax County's program was started late, and only a small part of the allocation to the County was obtained before funding under the Act was cut off. As a result, Fairfax County lags far behind Maryland and the District in stream valley acquisition."

The study committee did note that under the County's first park bond referendum (1959), a substantial portion of the funds was allocated to stream valley acquisition and in the second five-year Capital Improvement Program (1966), 13 percent of the funding for land acquisition was allocated to stream valley lands. The Committee found that, although funding for this program anticipated matching funding for land acquisition from federal and state- sources, "a heavy reliance is placed upon dedication of land by developers." A County planning staff study of land dedication under the alternate density (cluster development) ordinance found that "the acreage coming to the County amounts to only 10 percent." The study committee concluded:

"It is apparent that the current program for stream valley acquisition by the Park Authority is not one of planned acquisition but rather acquisition through dedication at the option of the developers, and that the acreage acquired through dedication under the existing ordinances will fall woefully short of providing an adequate stream valley park system."

As a result of these findings, the Park Authority's Stream Valley Plan subcommittee was formed to provide new direction for the acquisition of a stream valley park system. The committee adopted the following guidelines:

"1. The conservation of land and water resources, flood control, provision of outdoor recreation, and the structuring of growth all constitute a public purpose which would be served by placing the major stream valleys of Fairfax County in a stream valley park system.

"2. The stream valley consists of the stream, flood plain, and first valley slope on either side of the flood plain running with the stream from source to point of confluence with a larger body of water. (Note: The Greenways concept expands upon the stream valley definition to include proximate significant natural, cultural and recreational resources.)

"3. The role of the valleys in Fairfax County should be to provide region serving open space as a separator of concentrations of development.

"4. Preservation or public taking lines should be based upon physiographic features relating to the public purposes of item 1, and not upon arbitrary lines or boundaries.

"5. A basic stream valley park system for Fairfax County should be confined to the main stream valley of the major streams within the County, and the inclusion in the system of lateral tributaries should be discretionary.

"6. The continuity of public access within the stream valley park system should be regarded as imperative.

"7. A classification system applicable to stretches of valley should be developed which describes the valley in terms of physiographic features and appropriate recreational uses to serve as a planning guide. (Note: As defined in the 1996 Park Comprehensive Plan, Greenways are an element of the Natural Resources Program, linking larger Biodiversity Conservation Areas within the County. The primary classification instrument is the extent, diversity and environmental sensitivity of these resources. The Greenways Program also incorporates elements of the Countywide Trail System.)

"8. Public lands in the stream valleys should be regarded as a combined park and conservation holding."

The Park Authority Stream Valley Park Committee further clarified its vision as follows:

> "We propose that the basic stream valley system be largely in public ownership and be comprised of the main stream of the major intra-county streams. It is proposed that the many lateral valleys which join the main streams and which in the aggregate exceed in acreage the main stream valleys, be retained largely in private ownership. The two types of ownership will be in many ways complimentary. The basic public main valley system would provide a countywide network with a continuity of public access which would offer a varied recreational experience as well as scenic control. The laterals, many of them equal of the main valley in natural beauty, offer the developers ample opportunity for a valley-oriented residential development in a natural setting . . . Public road or trail easements along the laterals to the main stream would offer a transitional access from the urban environment to the 'deep woods' of the main valley with its public recreational opportunities."

At their regular meeting on October 15, 1974, the Fairfax County Park authority adopted a policy of acquisition of the following listed Stream Valleys for planning purposes. The majority of the identified stream valleys currently provide the basis for Park Authority staff requests for land dedication through the County's Development Review Process (see Area Plans and the County Comprehensive Plan Map for specific locations). Those marked by an asterisk indicate priorities for Greenway planning and development:

The Difficult Run Stream Valley*, including:
- Captain Hickory Run from the vicinity of Oxfordshire Road
- Colvin Run from Wiehle Avenue
- Wolftrap Creek from Route 123
- Difficult Run from Fox Mill Road
- Little Difficult Run from a point east of West Ox Road
- South Fork from a point closest to Vale Road

The Sugarland Run Stream Valley*, including:
- Folly Lick Branch from Herndon Town Limit
- Sugarland Run from the Herndon Town Limit
- Offuts Branch to Sugarland Road

Cub Run Stream Valley*, including:
- Big Rocky Run from near Doeforth Drive
- Frog Branch from Stringfellow Road
- Cub Run from Route 50
- Flatlick Branch from Route 50
- Flatlick Branch from Route 50
- Cain Branch from Route 50
- Elklick Run from Loudoun County

Popes Head Creek Stream Valley (Reclassified as Private Open Space in the 1992 Area III Plan), including:
- Popes Head Creek from Route 654
- Piney Branch from Hope Park Road
- Cattle Creek from popes Head Road

Pohick Creek Stream Valley*, including
- Pohick Creek from near Zion Drive
- Rabbit Branch form near Whitefield Streets
- Sideburn Branch from Zion Drive
- Cherry Run from Lee Chapel Road
- Middle Run from Dam Site
- South Run from near Pohick Road north of Burke Lake
- Opossum Branch from north of Pohick Road

Accotink Creek Stream Valley*, including:
- Accotink Creek from the City of Fairfax
- Long Branch from near the City of Fairfax

Little Hunting Creek Stream Valley
- Little Hunting Creek from Route 1
- North Branch from Paul Springs Branch
- Paul Springs Branch from White Oaks Park

Cameron Run Stream Valley*, including:
- Turkeycock from Mason District Park
- Backlick from Wilberdale Park
- Holmes Run from Jefferson District Park
- Indian Run from Route 236

Dogue Creek Stream Valley, including:
- Dogue Creek from near Tara Village Park

Pimmit Run Stream Valley*, including:
- Little Pimmit Run from Franklin Park Road
- Pimmit Run from Route 7

Scotts Run Stream Valley, including:
- Scotts Run from Route 495 south of Route 123

Nichols Run (excluded by the Park Authority on September 2, 1975), including:
- Nichols Run from Martin Redman Drive
- Jefferson Branch from Fairfax Drive

Horsepen Run Stream Valley, including:
- Frying pan Branch from Monroe Street
- Horsepen Run from Ashburton Avenue
- Johnny Moore Creek Stream Valley (Reclassified as Private Open Space in 1992 Area III Plan), including:
- Johnny Moore Creek from Twin Lakes Golf Course

The Potomac River Shoreline*

Policy 103.2 Trails

The Authority shall plan for the location, design and construction of an integrated trail (non-motorized transportation) system within the park lands and for the connections of the park trail systems to the Countywide trail system so as to provide a continuity of access. Trails also may be provided as recreational facilities independently of other trails and trail systems. The Authority shall assist other public entities, homeowner associations and other land owners in the planning and development of the Countywide trail system.

Revised and adopted October 28, 1998