Odor Control Vent Valve

Wager 1850 - 6 Inch Diameter

Description: Furnish and Install 4 odor control vent valves complete, including all piping, appurtenances and any other incidentals required to meet the Manufacturers requirements to provide proper function. Installation shall be in accordance with County requirements and instructions.

1850 Odor Control Sewer Vent Check Valve

The 1850 is a combined odor control vent valve, with the additional feature of a ball check to prevent water from submerging the media bed, as well as prevent inflow of flood waters into the lines.

The 1850 connects to a candy cane style pipe. It is designed to allow for venting in the open position. The interior of the body contains a canister filled with 12 lbs of odor media. The media is in pellet form allowing for better airflow thru the media bed, and is highly effective in removing hydrogen sulfide gas (H2S) . Pellets are non-toxic, and landfill disposable. Blue life indicator pellets turn white when the media is spent. A complimentary lab analysis is offered after 1 year in service to determine the remaining life of the media. This is especially helpful in creating an effective preventative maintenance program for odor control.

The 1850 is cast in aluminum with an epoxy coated finish. It is available in 6" flanged end connection. A polyethylene float and neoprene seat are incorporated into the check valve. It uses all stainless steel hardware and insect screens to prevent corrosion.

This animation illustrates how the H2S gas (green arrows) gets scrubbed thru the media canister in the open position, resulting in de-odorized air (blue arrows).

When there is a flood situation, the ball float will rise and check preventing the media canister from being submerged in water. Once the flood waters recede, the 1850 once again allows for ventilation and the elimination of H2S gas odors.

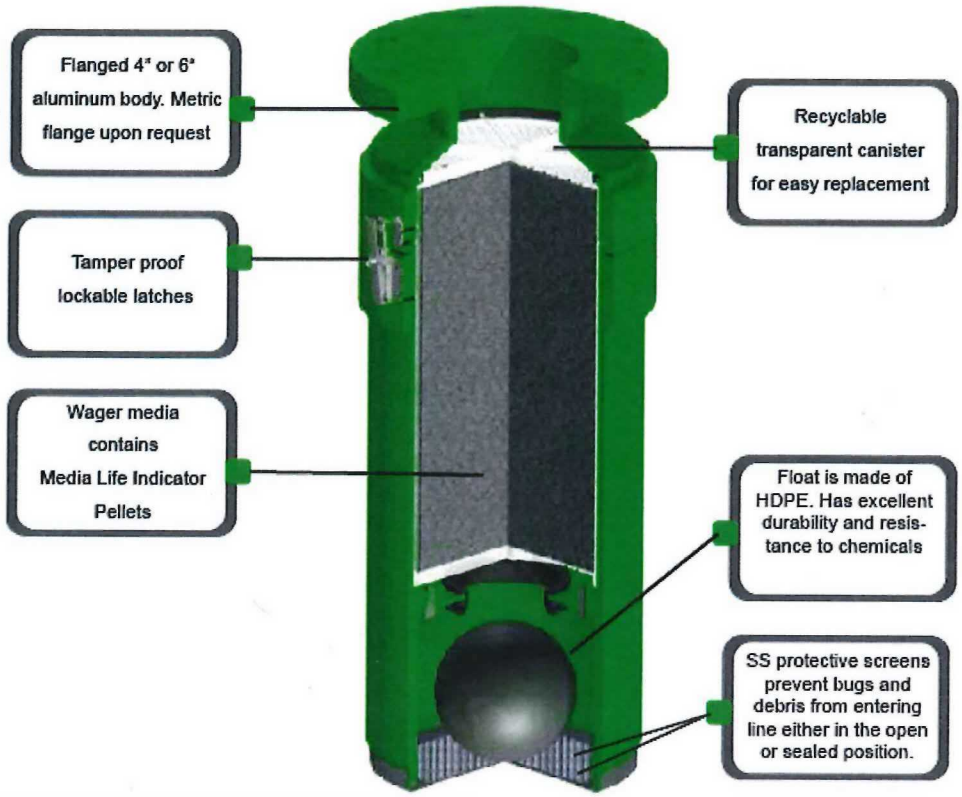

WAGER
COMPANY

PIPE FITTINGS

Wager now provides a complete and broad inventory of industrial goose neck pipe fittings for the marine industry (Candy Cane risers for sewer industry). Fittings include butt weld, threaded, and flanged..

180° OUTLET

90° OUTLET

SPECIFICATIONS

MATERIAL

- HOT DIPPED GALVANIZED STEEL
- ALUMINUM
- 304 STAINLESS STEEL
- 316 STAINLESS STEEL

OTHER

- 150 LBS 90° AND 180° OUTLETS

WAGER
COMPANY
WWW.WAGERUSA.COM
Toll Free USA: 800-562-7024

SEWER
VENT VALVES

1850 Odor Control Sewer Vent Check Valve

SPECIFICATIONS

A. This specification defines the requirements for a Wager 1850 Vent Scrubber 4-1850FAPC & 6-1850FAPC (inverted vent check, odor control valve) manufactured by Wager Company in Rural Hall, NC.

B. The 4-1850FAPC & 6-1850FAPC consists of dry-scrubbing media contained in a 356-T6 powder coated, grass green aluminum casting with a 4" or 6" inlet.

C. The model 1850 shall contain 12 lbs of dry-scrubbing media that is engineered for the removal of H2S gas. The media is housed in a polycarbonate container that is 12" x 7.2" in diameter.

D. The airflow shall be designed for passive applications. The configuration shall be arranged so that the contaminated air shall flow into the top inlet flange and be forced downwards through the media bed. Treated air shall discharge out the bottom of the unit through ventilated openings.

E. All components of the 4-1850FAPC & 6-1850FAPC shall include
1. 356-T6 aluminum casting, powder coated
2. 12 lbs of odor controlling media engineered in pellet form
3. 4" (101.6mm) flanged connection
4. Tamper proof lockable hook and security latches
5. Disposable media polycarbonate insert

F. Vent Scrubber Material
1. 356-T6 Aluminum casting
2. Polycarbonate canister measuring 7.2 (183 mm) diameter and 12" (305mm) in height
3. Latches in 316SS
4. Hooks in 316SS
5. 12 lbs of odor controlling media designed for removal of H2S gas
6. 4" Flanged Connection - Optional metric flange AND 6" Flanged Connection Optional Metric Flange
7. Plastic vent scrubbers that contain activated alumina media or carbon will not be accepted.
8. Media must be Non-Hazardous before and after it is spent.

G. Media Specification
1. Moisture Content: 35% Max
2. Crush Strength: 35%-70% Max
3. Abrasion: 4.5% Max
4. Pellet Diameter: 1/16" –

H. Wager media only will be accepted due to the high level of capacity. No equals will be accepted. Carbon will not be accepted.

I. Only UL certified media will be accepted in Wager's vent scrubber.

J. If other media's are used in this unit, it must be designed to be 25% larger with a minimum of 25% additional media.

K. The general contractor is responsible for all design cost changes, engineer review time, and testing verification.

L. Analytical Services:
1. Samples of the media may be analyzed in order to predict the life of the system media at Wager's expense.

Wager Company, Inc. • 570 Montroyal Road • Rural Hall, NC 27045
Phone: (336) 969-6909 • FAX (336) 969-5314 • www.wagerusa.com

WAGER
COMPANY

PARTS LIST				
ITEM	QTY	PART NUMBER	DESCRIPTION	MATERIAL
1	1	6-1800FAPC	SEWER VENT-1800, ODOR CONTROL	Aluminum
2	1	1850-4-F	FLOAT HOUSING	Aluminum
3	1	1764SS	STAMPED, 20 GAGE	Stainless Steel
4	8	BOLT-1/4-1	1/4-20 x 1" HEX HEAD	Stainless Steel
5	1	SCRN-4-1/4SS	1/4 x 1/4 MESH, .047 WIRE DIA.	Stainless Steel
6	1	SEAT-3N-I	FLOAT SEAT	BUNA
7	1	FLT-4P	BALL FLOAT	HDPE

ASSEMBLED WEIGHT - 44 LBS.

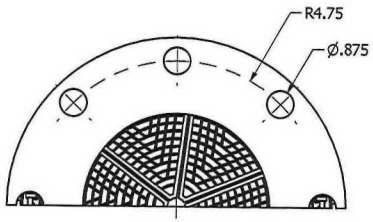

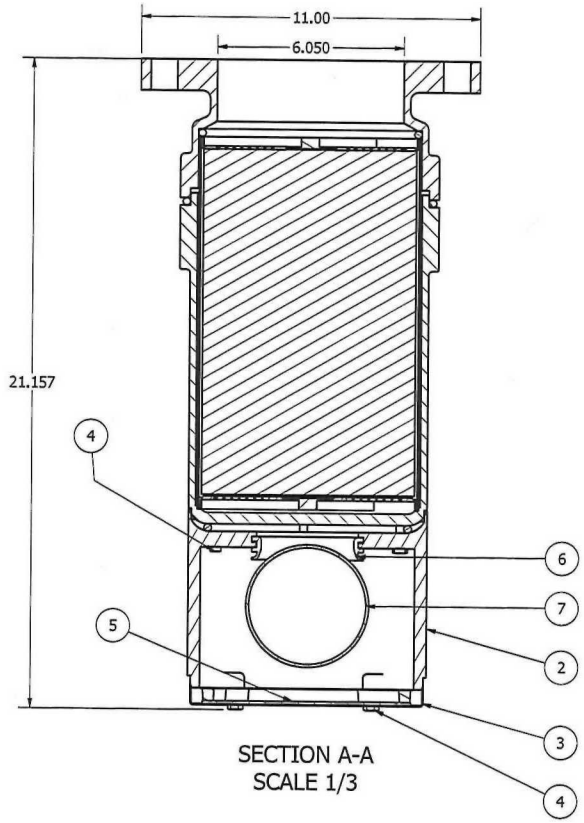

SECTION A-A
SCALE 1/3

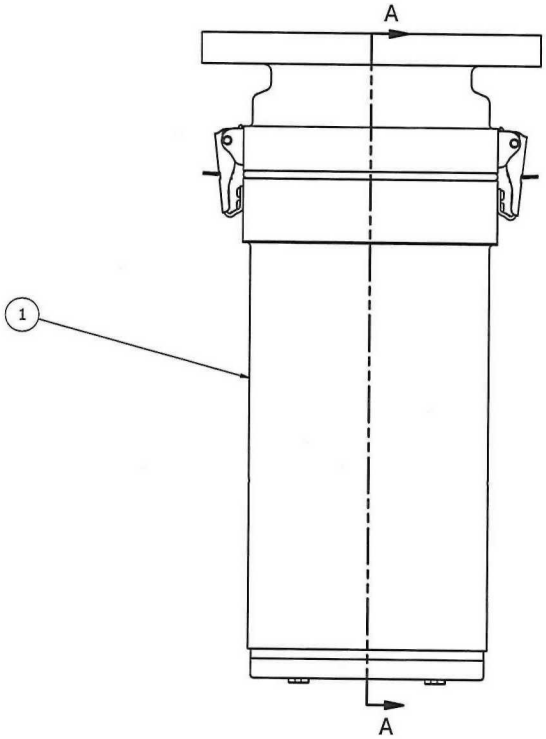

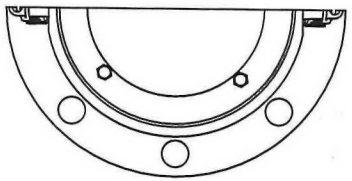

DRAWN shardy	10/23/2013	ROBERT H. WAGER CO.
CHECKED		TITLE SEWER VENT VALVE WITH ODOR CONTROL
QA		
MFG		
APPROVED		
		SIZE C / DWG NO 6-1850FAPC / REV
		SCALE / SHEET 1 OF 1