FAIRFAX COUNTY, VIRGINIA
DEPARTMENT OF PUBLIC WORKS
AND ENVIRONMENTAL SERVICES

LITTLE HUNTING CREEK SEWER REPLACEMENT

95% DESIGN - NOT FOR CONSTRUCTION

PROJECT NO. WW-000024-002-A

VICINITY MAP

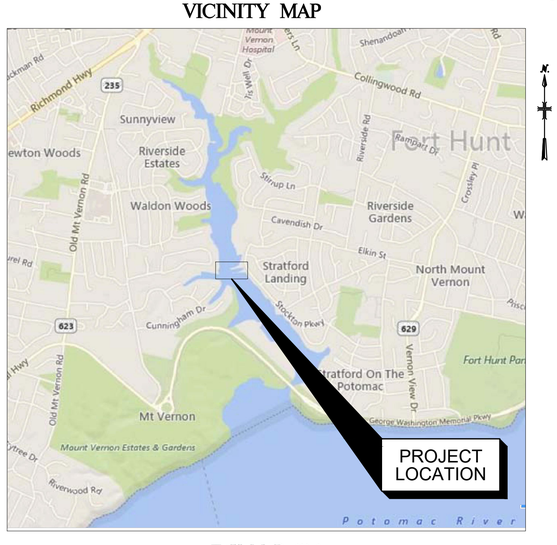

TAX MAP: 111-1
1" = 1000'

FEBRUARY 2019

95% NOT FOR CONSTRUCTION

TABLE OF CONTENTS

95% SUBMITTAL	SHEET NO.	DISCIPLINE NO.	TITLE
X	1	G-1	COVER SHEET w/ VICINITY MAP
X	2	G-2	GENERAL NOTES 1
X	3	G-3	GENERAL NOTES 2
X	4	G-4	ENVIRONMENTAL COMPLIANCE PROJECT DATASHEET
X	5	C-1	EXISTING CONDITIONS AND CONTRACTOR ACCESS AND STAGING
X	6	C-2	EROSION CONTROL AND TREE MANAGEMENT PLAN
X	7	C-3	PLAN AND PROFILE - STOCKTON PARKWAY
X	8	C-4	PLAN AND PROFILE - CREEK CROSSING
X	9	C-5	BYPASS PUMPING PLAN
X	10	CD-1	CIVIL DETAILS 1
X	11	CD-2	CIVIL DETAILS 2
X	12	CD-3	CIVIL DETAILS 3
X	13	EC-1	EROSION CONTROL DETAILS 1
X	14	EC-2	EROSION CONTROL DETAILS 2
X	15	S-1	STRUCTURAL DETAILS
X	16	TCP-1	TEMPORARY TRAFFIC CONTROL NOTES
X	17	TCP-2	TEMPORARY TRAFFIC CONTROL STANDARD DETAILS
X	18	TCP-3	TEMPORARY TRAFFIC CONTROL DETAILS

REVIEWED AND APPROVED FOR STORMWATER COMPLIANCE

Certified Stormwater Management Reviewer — DATE

Certified Erosion and Sediment Control Reviewer — DATE

The above review is required for projects not going through the Land Developement Services site plan review process and with a land disturbance area no greater than 2500 sq. ft.

Land Distrubance Area: XXX Acres

Note; If land disturbance exceeds 1 acre, a VPDES permit is required.

RECOMMENDED FOR APPROVAL FOR CONSTRUCTION

DIRECTOR, Wastewater Design and Construction Division — DATE

DIRECTOR, Wastewater Collection Division — DATE

APPROVED

DEPUTY DIRECTOR, Department of Public Works and Environmental Services — DATE

EMERGENCY POLICE - FIRE - RESCUE 911

LITTLE HUNTING CREEK SEWER REPLACEMENT

COVER SHEET w/ VICINITY MAP G-1

PROJECT NO. WW-000024-002-A

FAIRFAX COUNTY, VIRGINIA
DEPARTMENT OF PUBLIC WORKS AND ENVIRONMENTAL SERVICES

CAPITAL FACILITIES

WASTEWATER DESIGN & CONSTRUCTION DIVISION
12000 GOVERNMENT CENTER PKWY, SUITE 463
FAIRFAX, VIRGINIA 22035-0052
703-324-5111

REVISIONS				
#	DESCRIPTION	BY	APP BY	DATE

APPR BY THE WASTEWATER DESIGN AND CONSTRUCTION DIVISION

DESIGNED BY: M. PACINI
DRAFTED BY: W. LEAK
CHECKED BY: D. HAMILTON

SCALE
VERT. 1"=N/A
HORIZ. 1"=N/A

SHEET 1 OF 18

FEB 2019

User: WLEAK Spec: AUS-NCSMOD File: C:\ACAD\PROJ\2779 - FAIRFAX COUNTY\2017 WW BOA\AR17-06 - LITTLE HUNTING CREEK\SHEETS\GENERAL\G-1_COVER.DWG Scale:1:1 SavedDate:2/5/2019 Time:08:49 Plot Date: Leak, Ken; 2/7/2019; 12:29 ; Layout:SHEET 1

GENERAL NOTES

(THESE GENERAL NOTES SHALL BE USED WHERE THEY ARE APPLICABLE TO THE PROJECT)

EROSION AND SEDIMENT CONTROL

I. EROSION CONTROL NARRATIVE

PRIOR TO ANY LAND DISTURBING OPERATIONS, THE EROSION CONTROLS, AS SPECIFIED BY THE ENGINEERING PLANS, SHALL BE INSTALLED. ALL MECHANICAL AND VEGETATIVE PRACTICES SHALL BE IN CONFORMANCE WITH THE REQUIREMENTS CONTAINED IN THE FAIRFAX COUNTY PUBLIC FACILITIES MANUAL AND THE VIRGINIA EROSION AND SEDIMENT CONTROL HANDBOOK. SLOPE AREAS THAT CANNOT BE ADEQUATELY STABILIZED BY SEEDING, SHALL BE SODDED AND STAKED. AS DISTURBED AREAS, NOT TO BE CONSTRUCTED UPON, ARE FINAL GRADED, THEY SHALL BE PREPARED, LIME AND FERTILIZER APPLIED. SEEDED AND MULCHED. FOR THE AREAS OUTSIDE THE V.D.O.T. RIGHT-OF-WAY, THE SEED SHALL CONSIST OF A MIXTURE OF KENTUCKY 31 TALL FESCUE AND KENBLUE IN ACCORDANCE WITH DEPARTMENT OF PUBLIC WORKS AND ENVIRONMENTAL SERVICES SPECIFICATIONS OR COUNTY APPROVED ALTERNATE SEED FOR AREAS LOCATED WITHIN THE V.D.O.T. RIGHT-OF-WAY, THE SEED MIXTURE SHALL BE IN CONFORMANCE WITH CURRENT V.D.O.T. REQUIREMENTS. SEDIMENT CONTROLS AND MECHANICAL DEVICES SHALL BE REMOVED FROM CONTRIBUTING AREAS AS THEY BECOME STABILIZED. THIS RESTORATION WORK WILL BE PERFORMED WITHIN 7 DAYS AFTER FINAL GRADING. ALL TEMPORARY SEDIMENT CONTROLS AND MECHANICAL DEVICES SHALL BE REMOVED FROM CONTRIBUTING AREAS AS THEY BECOME STABILIZED. FOR ADDITIONAL DETAILS, REFER TO THE CURRENT EDITION OF THE VIRGINIA EROSION AND SEDIMENT CONTROL HANDBOOK AND THE FAIRFAX COUNTY PUBLIC FACILITIES MANUAL.

II. EROSION, SEDIMENTATION, AND LAND CONSERVATION NOTES

1. MEASURES TO CONTROL EROSION AND SILTATION SHALL BE PROVIDED PURSUANT TO AND IN COMPLIANCE WITH CURRENT FEDERAL, STATE AND LOCAL REGULATIONS. THE INFORMATION CONTAINED IN THE CONSTRUCTION PLANS AND/OR THE APPROVAL OF THE PLANS SHALL IN NO WAY RELIEVE THE CONTRACTOR OR HIS AGENT OF ANY LEGAL RESPONSIBILITY WHICH MAY BE REQUIRED BY THE CODE OF VIRGINIA OR ANY ORDINANCE ENACTED BY THE COUNTY OF FAIRFAX.
2. ALL AREAS, ON OR OFF-SITE, WHICH ARE DISTURBED BY THIS CONSTRUCTION AND WHICH ARE NOT PAVED OR BUILT UPON SHALL BE ADEQUATELY STABILIZED TO CONTROL EROSION AND SEDIMENTATION. ACCEPTABLE STABILIZATION SHALL CONSIST OF PERMANENT GRASS SEED MIXTURE INSTALLED IN ACCORDANCE WITH THE PROJECT SPECIFICATIONS. ALL SLOPES 2:1 AND GREATER SHALL BE SODDED AND STAKED OR OTHERWISE STABILIZED IN A MANNER APPROVED BY THE ENGINEER.
3. ANY DISTURBED AREA NOT PAVED, PERMANENTLY SEEDED, SODDED, OR BUILT UPON BY 1 NOVEMBER OR DISTURBED AFTER THAT DATE, IS TO BE SEEDED WITHIN 14 DAYS WITH OATS, ABRUZZI RYE OR APPROVED EQUIVALENT, AND MULCHED WITH HAY OR STRAW MULCH AT THE RATE OF 2 TONS PER ACRE. FOR ADDITIONAL DETAILS, REFER TO THE CURRENT EDITION OF THE VIRGINIA EROSION AND SEDIMENT CONTROL HANDBOOK AND THE FAIRFAX COUNTY PUBLIC FACILITIES MANUAL.
4. NO AREA SHALL BE DENUDED AND NOT BE DISTURBED FOR A PERIOD LONGER THAN 14 DAYS IN ACCORDANCE WITH THE FAIRFAX COUNTY PUBLIC FACILITIES MANUAL.
5. TEMPORARY DIVERSIONS, SEEDED AND MULCHED OR STAKED STRAW BALE DIVERSIONS AND OTHER CONTROL MEASURES NECESSARY ARE TO BE PLACED AS INDICATED ON THE DRAWINGS PRIOR TO OR AS THE FIRST STEP IN EXCAVATION.
6. WHEN IN ACCORDANCE WITH STATE AND FEDERAL JOB SAFETY REQUIREMENTS, ALL EXCAVATED MATERIAL IS TO BE PLACED ON THE UPHILL SIDE OF TRENCHES. NO MATERIAL IS TO BE PLACED IN STREAMS. ANY STOCKPILED MATERIAL WHICH WILL REMAIN IN PLACE LONGER THAN 14 DAYS IS TO BE SEEDED FOR TEMPORARY VEGETATION AND MULCHED. WHERE SPOIL IS PLACED ON THE DOWNHILL SIDE OF TRENCH, IT IS TO BE BACK-SLOPED TO DRAIN TOWARD THE TRENCH. WHEN NECESSARY TO DEWATER THE TRENCH, THE PUMP DISCHARGE HOSE MUST OUTLET IN A STABILIZED AREA OR A SEDIMENT BASIN.
7. ALL DISTURBED AREAS ARE TO BE SEEDED AND MULCHED OR SODDED WITHIN 5 DAYS AFTER BACKFILL OF THE APPLICABLE TRENCH SECTION, IN ACCORDANCE WITH THE PROVISIONS CONTAINED IN THE PROJECT SPECIFICATIONS RELATING TO SEEDING AND SODDING. SPEED IS THE ESSENTIAL LAND CONSERVATION ELEMENT FOR A LINEAR PROJECT.
8. FOR FURTHER REQUIREMENTS AND DETAILS OF TREE PRESERVATION, PLANTING, EROSION AND SEDIMENT CONTROL, SEE FAIRFAX COUNTY PUBLIC FACILITIES MANUAL AND/OR THE VIRGINIA EROSION AND SEDIMENT CONTROL HANDBOOK.
9. ALL EROSION AND SEDIMENT CONTROLS SHALL BE REMOVED WITHIN 30 DAYS AFTER THE PROJECT IS STABILIZED. (MS-18)
10. AN EROSION AND SEDIMENT CONTROL CONTRACTOR CERTIFICATION (E.S.C.C.C.) IS REQUIRED FOR ALL LAND DISTURBING ACTIVITIES.
11. THE CONTRACTOR SHALL PROPERLY INSTALL AND MAINTAIN EROSION AND SEDIMENT CONTROLS FOR THE LIFE OF THE PROJECT; AND ROUTINELY CHECK CONTROL DEVICES BEFORE, DURING AND AFTER STORM EVENTS.

CONSTRUCTION NOTES

1. ALL CONSTRUCTION, INCLUDING ANY PROPOSED LANDSCAPING, SHALL CONFORM TO THE CURRENT EDITION OF THE FAIRFAX COUNTY PFM AND THE VIRGINIA DEPARTMENT OF TRANSPORTATION (V.D.O.T.) STANDARDS AND SPECIFICATIONS AND SHALL CONFORM TO THE CURRENT EDITION OF THE VIRGINIA UNIFORM STATEWIDE BUILDING CODE.
2. ALL CONSTRUCTION WITHIN THE V.D.O.T. RIGHT-OF-WAY SHALL CONFORM TO THE PROVISIONS CONTAINED IN THE V.D.O.T. LAND USE PERMIT ISSUED FOR THIS LOCATION. THE CONTRACTOR SHALL BE THOROUGHLY FAMILIARIZED WITH THE REQUIREMENTS OF THIS LAND USE PERMIT PRIOR TO THE START OF ANY CONSTRUCTION IN V.D.O.T. RIGHT-OF-WAY. THE SPECIAL PROVISIONS IN FORM MP-63 ARE A PART OF THE VDOT LAND USE PERMIT.
3. UNLESS MORE STRINGENT COMPACTION REQUIREMENTS ARE INDICATED ON THE PLANS OR IN THE SPECIFICATIONS, THE BACKFILL OF EMBANKMENT MATERIAL, THE INSTALLATION OF TRENCH BACKFILL AND THE RESTORATION OF DISTURBED AREAS SHALL BE COMPACTED IN ACCORDANCE WITH THE CURRENT EDITION OF THE V.D.O.T. ROAD AND BRIDGE SPECIFICATIONS. ALL COMPACTION SHALL BE AT ±2% OF THE OPTIMUM MOISTURE CONTENT.
4. ALL SUBGRADE, SUBBASE, BASE AND SHOULDER MATERIAL SHALL BE PLACED AND COMPACTED TO THE DENSITY SPECIFIED IN THE CURRENT EDITION OF THE V.D.O.T. ROAD AND BRIDGE SPECIFICATIONS. ALL COMPACTION SHALL BE AT ±2% OF THE OPTIMUM MOISTURE CONTENT.
5. THE CONTRACTOR SHALL PROVIDE ADEQUATE MEANS OF CLEANING TRUCKS AND/OR OTHER EQUIPMENT OF MUD PRIOR TO ENTERING THE V.D.O.T. RIGHT-OF-WAY. IT IS THE CONTRACTOR'S RESPONSIBILITY TO CLEAN ALL STREETS, ALLAY DUST AND TO TAKE WHATEVER MEASURES NECESSARY TO ENSURE THE ROAD(S) ARE MAINTAINED IN A CLEAN, MUD AND DUST FREE CONDITION AT ALL TIMES.
6. TEMPORARY OR PERMANENT PAVEMENT PATCHES ARE TO BE PLACED IN ALL ROADWAY CUTS WITH HOT MIX THE SAME DAY THE CUT IS MADE IN ACCORDANCE WITH V.D.O.T. REQUIREMENTS. SEE SPECIAL PROVISIONS FOR PAVEMENT OPEN CUTS, FORM LUP-OC NOVA FOR DETAILS.
7. THE TOP ELEVATION OF EXISTING MANHOLES SHALL BE ADJUSTED TO MEET THE FINAL PAVEMENT ELEVATION AT THE TIME OF FINAL PAVING OPERATIONS. ALL MANHOLES ARE TO BE PROTECTED FROM THE TRAVELING PUBLIC. NO MANHOLE IS TO BE RAISED ABOVE THE TOP ELEVATION OF THE ROADWAY WITHOUT THE APPROPRIATE TRANSITION.
8. CONTRACTOR IS TO ADJUST MANHOLE, VALVE, AND METER BOX COVERS BEFORE PLACING FINAL SURFACE PAVEMENT.
9. THE CONTRACTOR SHALL VISIT THE SITE AND SHALL VERIFY EXISTING CONDITIONS PRIOR TO SUBMITTING A BID FOR THE CONSTRUCTION OF THE PROJECT.
10. WHERE EXISTING NATURAL DRAINAGE DITCHES OR STREAM BANKS ARE DISTURBED DURING CONSTRUCTION THE CONTRACTOR SHALL RESTORE THESE AREAS TO ORIGINAL ALIGNMENT, GRADE AND INVERT.
11. PROPOSED TOP OF CURB GRADES SHALL BE FIELD ADJUSTED AS REQUIRED TO CONFORM TO THE INTENT OF THE TYPICAL SECTION. A SMOOTH GRADE SHALL BE MAINTAINED FROM THE CENTERLINE TO THE PROPOSED EDGE OF PAVEMENT OR FACE OF CURB TO PRECLUDE THE FORMING OF FALSE GUTTERS AND/OR THE PONDING OF WATER ON THE ROADWAY. THE EXISTING PAVEMENT SHALL BE RECAPPED AND/OR REMOVED AND REPLACED AS REQUIRED TO ACCOMPLISH THIS REQUIREMENT. ALL CURB FORMS SHALL BE INSPECTED FOR HORIZONTAL AND VERTICAL ALIGNMENT BY FAIRFAX COUNTY OR THEIR AUTHORIZED REPRESENTATIVES PRIOR TO PLACING OF CONCRETE.
12. THE FOLLOWING PROVISIONS SHALL APPLY TO THE USE OF SHEETING AND SHORING:
    - (A) SHEETING AND SHORING OR OTHER APPROVED METHODS FOR TRENCH BRACING WILL BE REQUIRED ON THIS CONTRACT AS NEEDED TO MEET ALL SAFETY REQUIREMENTS.
    - (B) UNLESS OTHERWISE DIRECTED BY THE ENGINEER, SHEETING AND SHORING WILL BE REMOVED FROM ALL TRENCHES PRIOR TO BACKFILLING OPERATIONS.
    - (C) UNLESS SPECIFICALLY IDENTIFIED IN THE CONTRACT DOCUMENTS, NO ADDITIONAL COMPENSATION WILL BE ALLOWED FOR SHEETING AND SHORING.

CONSTRUCTION NOTES (CONTINUED)

13. THE CONTRACTOR SHALL RESTORE ALL DRIVEWAYS DISTURBED DURING CONSTRUCTION. RESTORATION SHALL CONSIST OF THE FOLLOWING:
    - * GRAVEL DRIVEWAY – PROVIDE MINIMUM 6" COMPACTED 21A
    - * ASPHALT DRIVEWAY – PROVIDE 6" COMPACTED 21A WITH MINIMUM 2" SM-9.5A OVERLAY
    - * CONCRETE DRIVEWAY – PROVIDE A NEAT SAWCUT CONNECTION, MINIMUM 4" COMPACTED 21A AND 5" CLASS A3 CONCRETE WITH WWF 6X6 – W2.9 X W2.9
14. WHERE A PROPOSED PIPE CROSSES OR PARALLELS A STREET, THE ASPHALT SHALL BE NEATLY SAWCUT TO FULL DEPTH. AFTER INSTALLATION OF THE PIPE, THE ROADWAY SHALL BE PATCHED IN ACCORDANCE WITH THE V.D.O.T. LAND USE PERMIT ISSUED FOR THE PROJECT.
15. HORIZONTAL LOCATION OF THE SERVICE CONNECTIONS AT SANITARY SEWER MAINS, IF INDICATED ON THE CONSTRUCTION PLANS, WERE TAKEN FROM TELEVISION INSPECTION REPORTS. ALL SERVICE CONNECTIONS WERE SHOWN TO BE IN THE UPPER TWO QUADRANTS OF THE MAINS. EXCEPT FOR INTERPOLATION OF THE INVERT AT THE SANITARY MAINS, THE ELEVATIONS AND VERTICAL LOCATIONS OF THE SERVICE CONNECTIONS ARE NOT KNOWN. IN SEWER MAINS AS NOTED, TELEVISION INSPECTIONS DID NOT DETECT ANY SERVICE CONNECTIONS AND THE LOCATIONS SHOWN ON THE DRAWING ARE THE MOST PROBABLE POSITIONS FOR SERVICE CONNECTIONS.
16. THE PAVEMENT DESIGN IN THE CONSTRUCTION PLANS WAS PREPARED BASED ON AVAILABLE SUBSURFACE INFORMATION INCLUDING LABORATORY CALIFORNIA BEARING RATIO (C.B.R.) TESTS THAT WERE PERFORMED DURING THE DESIGN SUBSURFACE INVESTIGATION. WHEN THE CONTRACTOR REACHES THE SUBGRADE ELEVATION, ADDITIONAL CBR TEST LOCATIONS MAY BE DIRECTED BY THE ENGINEER FOR SELECTED LOCATIONS BASED ON ACTUAL FIELD CONDITIONS OBSERVED. THE CBR SAMPLES AND TESTS SHALL BE PERFORMED BY A GEOTECHNICAL ENGINEERING FIRM UNDER CONTRACT WITH FAIRFAX COUNTY. THE RESULTS OF THE ENGINEER'S EVALUATION OF THE CBR LABORATORY TESTS SHALL BE OBTAINED IN WRITING PRIOR TO THE PLACEMENT OF ANY SUBBASE OR BASE MATERIAL IN THE AREA(S) UNDER CONSIDERATION. THE PROPOSED PAVEMENT DESIGN FOR THE AREA(S) UNDER CONSIDERATION WILL EITHER BE CONFIRMED OR ADJUSTED BY THE ENGINEER BASED ON THE RESULT OF THE C.B.R. TEST RESULTS. THE CONTRACTOR SHALL COOPERATE WITH ENGINEER BY MODIFYING CONSTRUCTION ACTIVITIES AND/OR SCHEDULING IN ORDER TO PERMIT THE ADDITIONAL CBR TESTING. THE CONTRACTOR SHALL NOT BE ENTITLED TO ANY MONETARY DAMAGES WHATSOEVER FOR ANY DELAYS RESULTING FROM THIS TESTING. THE CONTRACTOR'S SOLE RELIEF IS A TIME EXTENSION GRANTED IN ACCORDANCE WITH ARTICLE 8.3.

TRANSPORTATION MANAGEMENT PLAN

1. THE CONTRACTOR SHALL BE REQUIRED TO SUBMIT CHANGES TO APPROVED TRANSPORTATION MANAGEMENT PLANS FOR APPROVAL BY V.D.O.T. A MINIMUM OF 30 WORKING DAYS PRIOR TO BEGINNING CONSTRUCTION.
2. THE CONTRACTOR SHALL BE RESPONSIBLE FOR DAILY TRAFFIC CONTROL SUCH AS LANE CLOSURES, FLAGGERS DRIVEWAY ENTRANCES, ETC., TO PROPERLY MAINTAIN TRAFFIC THROUGHOUT THE PROJECT.
3. EXISTING SURFACE, BASE, AND SUBBASE MATERIAL WHICH WILL BE DEMOLISHED OR OBLITERATED DURING CONSTRUCTION AND WHICH IS DETERMINED SUITABLE BY THE ENGINEER, SHALL BE SALVAGED AND UTILIZED FOR BACKFILL.
4. ALL REQUIRED CONSTRUCTION SIGNING, TEMPORARY PAVEMENT WIDENING, TEMPORARY LAND STABILIZATION, TRAFFIC BARRIERS, TEMPORARY PAVEMENT MARKINGS, ERADICATION, ETC., SHALL BE INCLUDED IN THE CONTRACTOR'S BID PRICE FOR TRAFFIC MAINTENANCE.
5. ALL TRAFFIC MAINTENANCE SHALL CONFORM WITH THE FOLLOWING AND THE LATEST REVISIONS THERETO: THE VIRGINIA WORK AREA PROTECTION MANUAL, VA ROAD AND BRIDGE SPECIFICATIONS, VA ROAD AND BRIDGE STANDARDS AND THE FHWA MANUAL ON UNIFORM TRAFFIC CONTROL DEVICES.
6. ALL EXISTING SIGNS SHALL BE MAINTAINED AT ALL TIMES DURING CONSTRUCTION.
7. CONTRACTOR SHALL MAINTAIN ACCESS TO ALL DRIVEWAY ENTRANCES DURING CONSTRUCTION.
8. TEMPORARY CLOSURE AFFECTING EGRESS TO ADJACENT PROPERTIES SHALL BE COORDINATED WITH AFFECTED PARTIES.
9. PEDESTRIAN DETOUR SHALL BE MAINTAINED AT ALL TIMES DURING CONSTRUCTION ACCORDING TO VIRGINIA WORK AREA PROTECTION AND MUTCD GUIDELINES.
10. THE CONTRACTOR SHALL INFORM THE V.D.O.T. TRAFFIC OPERATIONS CENTER OF ANY LANE CLOSURES AND SUBSEQUENT OPENINGS ON A DAILY BASIS BY CALLING 703-877-3449.

SANITARY SEWER

1. ALL SANITARY SEWER IN THIS CONTRACT SHALL BE CL-51 DIP UNLESS OTHERWISE NOTED.
2. LENGTHS OF PIPE SHOWN ON THE DRAWINGS ARE MEASURED FROM CENTER OF STRUCTURE TO CENTER OF STRUCTURE.
3. IF PVC PIPE IS USED, ALL LATERAL SPUR CONNECTIONS SHALL BE MADE WITH MANUFACTURED PVC "TEE" OR "WYE" FITTINGS. NO SADDLES SHALL BE USED.
4. LATERAL SPURS SHALL EXTEND 12" INSIDE PROPERTY LINES. IF THE UPPER ENDS OF THE LATERAL SPURS ARE GREATER THAN 6' BELOW THE GROUND SURFACE, THEN THE CONTRACTOR SHALL INSTALL TWO 45° BENDS AND A VERTICAL RISER (ALL 4" DIAMETER) TO WITHIN 4' OF THE GROUND SURFACE. THE INVERT SHOWN IN THE PROFILE IS AT THE BOTTOM OF THE LOWER 45° BEND.
5. AS-BUILT DRAWINGS FOR ALL NEW SANITARY SEWER INSTALLATIONS AND/OR ADJUSTMENTS TO EXISTING SANITARY SEWER FACILITIES SHALL BE PREPARED IN ACCORDANCE WITH SECTION 10-0104 OF THE FAIRFAX COUNTY PUBLIC FACILITIES MANUAL.
6. WHEN AN EXISTING SANITARY SEWER LINE IS REPLACED, ALL EXISTING SANITARY SEWER LATERAL SPUR LINES SHALL BE RECONNECTED TO NEW SANITARY SEWER. THESE SANITARY SEWER LATERAL SPUR LINE STREET TAPS SHALL BE PROVIDED STARTING AT A POINT 2-FEET TO 6-FEET FROM THE MAIN SEWER, OR IF NECESSARY, AT A LONGER DISTANCE TO ENSURE THAT THE EXISTING SANITARY SEWER LATERAL PIPE IS IN GOOD CONDITION.
7. THE CONTRACTOR SHALL OBTAIN A FAIRFAX COUNTY PLUMBING PERMIT PRIOR TO THE CONNECTION OF ANY SANITARY SEWER SPUR LINE TO THE MAIN SANITARY SEWER.

LEGEND

CONTROL POINT	HEADSTONE	SIGN
ELECTRIC BOX	LIGHT POLE	PARKING METER
ELECTRIC METER	GROUND LIGHT	HANDICAP
ELECTRIC MANHOLE	MAILBOX	ORNAMENTAL GRAS
SATELLITE DISH	GUY ANCHOR	CONIF. SHRUB
HV-AC	FLAG POLE	DECID. SHRUB
TRASH RECEPTACLE	GUY POLE	EVERGREEN SHRUB
GAS MARKER	UTILITY POLE	DECID. TREE
GAS METER	UTILITY POLE WITH DROP	CONIF. TREE
GAS VENT	POST	TREE STUMP
GAS VALVE	RAILROAD SIGNAL	IRRIGATION CONTROL BOX
COM. HANDHOLE	MANHOLE BARREL	IRRIGATION SPRINKLER
COM. VAULT	SANITARY CLEAN OUT	HYDRANT
COM. MANHOLE	SANITARY MANHOLE	WATER METER
COM. MARKER	STORM GRATE	WATER VALVE
COM. BOX	STORM MANHOLE	WATER WELL
COM. CABINET	STORM CLEAN OUT	C&G CURB & GUTTER
IRON PIPE	NAIL	CONCRETE MONUMENT
SOIL BORE		
PROPOSED SANITARY MANHOLE		INLET PROTECTION
OHW	OHW	OHW	ELECTRIC LINE OVERHEAD
UGE	UGE	UGE	ELECTRIC LINE UNDERGROUND
GAS	GAS	GAS	GAS LINE UNDERGROUND
			GUARD RAIL
			RAILROAD
SAN	SAN	SAN	SANITARY SEWER LINE
			SHRUB LINE
STM	STM		STORM SEWER LINE
			TREE LINE
W	W	W	W	WATER LINE UNDERGROUND
X	X	X	X	X	FENCE LINE
LOC	LOC	LOC	LOC	LOC	LIMITS OF CONSTRUCTION
TCE	TCE	TCE	TCE	TCE	TEMPORARY CONSTRUCTION EASEMENT
			PROPOSED SANITARY SEWER
			PROPERTY LINE
			PERMANENT EASEMENT
WET	WET	WET	WET	WETLANDS
FPL	FPL	FPL	FLOODPLAIN
RPA	RPA	RPA	RPA	RPA
STP xx	xx	xx	xx	SUPER SILT FENCE SERVICE AS TREE PROTECTION
SSF	SSF	SSF	SUPER SILT FENCE

95% NOT FOR CONSTRUCTION

EMERGENCY POLICE - FIRE - RESCUE 911

LITTLE HUNTING CREEK
SEWER REPLACEMENT

GENERAL NOTES 1
G-2

PROJECT NO. WW-000024-002-A

FAIRFAX COUNTY, VIRGINIA
DEPARTMENT OF PUBLIC WORKS
AND ENVIRONMENTAL SERVICES

CAPITAL FACILITIES

WASTEWATER DESIGN &
CONSTRUCTION DIVISION
12000 GOVERNMENT CENTER PKWY, SUITE 463
FAIRFAX, VIRGINIA 22035-0052
703-324-5111

REVISIONS	#	DESCRIPTION	BY	APP BY	DATE

APPR BY THE WASTEWATER DESIGN AND CONSTRUCTION DIVISION

DESIGNED BY: M. PACINI
DRAFTED BY: W. LEAK
CHECKED BY: D. HAMILTON

SCALE
VERT. 1"= N/A
HORIZ. 1"= N/A

SHEET
2 OF 18

FEB 2019

User:WLEAK Spec:AUS-NCSMOD File:C:\ACAD\PROJ\2779 - FAIRFAX COUNTY\2017 WW BOA\AR17-06 - LITTLE HUNTING CREEK\SHEETS\GENERAL\G-2.DWG Scale:1:1 SaveDate:2/6/2019 Time:14:29 Plot Date: Leak, Ken; 2/6/2019; 16:33 ; Layout:SHEET 2

GENERAL NOTES 2: UTILITIES

(THESE GENERAL NOTES SHALL BE USED WHERE THEY ARE APPLICABLE TO THE PROJECT)

MISS UTILITY: CALL 1-800-552-7001 OR 811
VA811.COM

UTILITIES NOTES

1. THE UTILITY INFORMATION SHOWN ON THESE PLANS IS TAKEN FROM INFORMATION PROVIDED BY AN UNDERGROUND UTILITY DESIGNATING AND LOCATING COMPANY AND IN SOME CASES, FROM INFORMATION RECEIVED FROM THE UTILITY COMPANIES. THE DEPARTMENT OF PUBLIC WORKS AND ENVIRONMENTAL SERVICES DOES NOT GUARANTEE THAT THE UTILITY INFORMATION SHOWN ON THE PLANS IS COMPLETE OR ACCURATE. THE CONTRACTOR MUST VERIFY THE UTILITY LOCATIONS PRIOR TO CONSTRUCTION.
2. ALL EXISTING UNDERGROUND UTILITIES SHALL BE MARKED IN THE FIELD BY MISS UTILITY PRIOR TO CONSTRUCTION. THE CONTRACTOR SHALL BE RESPONSIBLE FOR SCHEDULING THE FIELD MARKING OF UTILITIES WITH MISS UTILITY.
3. ALL EXISTING UNDERGROUND UTILITIES SHALL BE PHYSICALLY LOCATED BY THE CONTRACTOR PRIOR TO THE BEGINNING OF ANY CONSTRUCTION IN THE VICINITY OF THESE UTILITIES.
4. THE CONTRACTOR SHALL CONFORM TO THE PROVISIONS AS SPECIFIED IN THE CURRENT VIRGINIA ADMINISTRATIVE CODE (VAC) SECTION 20 VAC 5 - 309-140, EXCAVATOR'S RESPONSIBILITIES TO AVOID DAMAGE, DISLOCATING OR DISTURBANCE OF UTILITY LINES, AS FOLLOWS:

   "ANY PERSON EXCAVATING AROUND UNDERGROUND UTILITY LINES SHALL TAKE ALL REASONABLE STEPS TO PROTECT SUCH UTILITY LINES. THESE STEPS SHALL INCLUDE, BUT ARE NOT LIMITED TO, THE FOLLOWING:

   1. THE EXCAVATOR SHALL PLAN THE EXCAVATION IN SUCH A MANNER TO AVOID DAMAGE TO, AND MINIMIZE INTERFERENCE WITH, UNDERGROUND UTILITY LINES IN AND NEAR THE CONSTRUCTION AREA.

   2. THE EXCAVATOR SHALL EXPOSE THE UNDERGROUND UTILITY LINE TO ITS EXTREMITIES BY HAND DIGGING WITHIN THE EXCAVATION AREA WHEN EXCAVATION IS EXPECTED TO COME WITHIN TWO FEET OF THE MARKED LOCATION OF THE UNDERGROUND UTILITY LINE.

   3. THE EXCAVATOR SHALL NOT UTILIZE MECHANIZED EQUIPMENT WITHIN TWO FEET OF THE EXTREMITIES OF ALL EXPOSED UTILITY LINES.

   4. THE EXCAVATOR SHALL MAINTAIN A REASONABLE CLEARANCE, TO INCLUDE THE WIDTH OF THE UTILITY LINE, IF KNOWN, PLUS 24 INCHES, BETWEEN THE MARKED OR STAKED LOCATION OF AN UNDERGROUND UTILITY LINE AND THE CUTTING EDGE OR POINT OF ANY MECHANIZED EQUIPMENT, CONSIDERING THE KNOWN LIMIT OF CONTROL OF THE CUTTING EDGE OR POINT TO AVOID DAMAGE TO THE UTILITY LINE.

   5. THE EXCAVATOR SHALL PROVIDE PROPER SUPPORT FOR UNDERGROUND UTILITY LINES DURING EXCAVATION ACTIVITIES. DURING BACKFILL OPERATIONS, THE EXCAVATOR SHALL USE THE SAME OR SIMILAR BACKFILL MATERIAL THAT WAS ORIGINALLY AROUND THE UTILITY LINE, ENSURE THERE IS PROPER COMPACTION AROUND THE UTILITY LINE, PROTECT ALL TRACER WIRES, AND PROTECT OR REPLACE WARNING TAPES."

5. DISCONNECTED, PRIOR TO CLEARING THE SITE OF TREES, BUILDINGS, FOUNDATIONS, ETC. WITHIN THE LIMITS OF CONSTRUCTION IN ACCORDANCE WITH THE REQUIREMENTS INDICATED ON THE CONSTRUCTION PLANS.
6. CONTRACTORS SHALL NOTIFY OPERATORS WHO MAINTAIN UNDERGROUND UTILITY LINES IN THE AREA OF PROPOSED CONSTRUCTION, EXCAVATION OR BLASTING AT LEAST 2 WORKING DAYS, BUT NOT MORE THAN 10 WORKING DAYS PRIOR TO COMMENCEMENT OF EXCAVATION OR DEMOLITION IN ACCORDANCE WITH CHAPTER 63 OF FAIRFAX COUNTY CODE. NAMES AND TELEPHONE NUMBERS OF SELECT OPERATORS OF UNDERGROUND UTILITY LINES IN FAIRFAX COUNTY APPEAR ON THIS SHEET. THESE NUMBERS WILL ALSO BE USED TO SERVE EMERGENCY CONDITION NOTICE AS REQUIRED BY CHAPTER 63 OF THE FAIRFAX COUNTY CODE. THIS IS NOT A COMPLETE LIST OF ALL UNDERGROUND UTILITY OPERATORS IN FAIRFAX COUNTY.

PRIMARY UTILITY COMPANIES

PRIMARY UTILITY COMPANIES	EMERGENCY
AMERICAN TELEPHONE & TELEGRAPH CO. (AT&T)	1-800-241-3624
CITY OF FALLS CHURCH PUBLIC UTILITIES	(703-248-5044 24/7AFTER HOURS/EMERGENCIES 703-698-5613
COLUMBIA GAS OF VIRGINIA	1-800-543-8911 - (703) 631-5363 (METRO)
COLUMBIA GAS TRANSMISSION CORP.	1-800-835-7191 (24 HRS)
COLONIAL PIPELINE CO.	1-800-926-2728
COX COMMUNICATIONS	(703)-378-0882
DOMINION TRANSMISSION, INC.	1-888-264-8240 24/7
DOMINION VIRGINIA POWER	1-866-366-4357
FAIRFAX CO. WASTEWATER COLLECTION DIVISION	(703) 323-1211
FAIRFAX WATER	(703) 698-5600 OR 698-5613
FAIRFAX COUNTY PUBLIC SAFETY	(703)-691-2131 OR 911
MCI, WORLD	1-800-624-9675
WORLD COM. (METROPOLITAN FIBER SYSTEMS)	(703) 852-6700
NORTHERN VIRGINIA ELEC. CO-OP (NOVEC)	(703) 335-0500
TRANSCO GAS PIPELINE CO.	1-800-440-8475 (24 HRS)
TOWN OF HERNDON PUBLIC WORKS	(703) 435-6860 STATION 185 (703) 435-6846
TOWN OF VIENNA WATER SERVICE	(703) 255-6381 AFTER 5:00 PM., (703) 255-6385
SPRINT (GLOBAL ONE)	1-800-521-0579 (24 HRS)
UPPER OCCOQUAN SERVICE AUTHORITY (UOSA)	703-830-2200
SMART TRAFFIC SIGNAL SYSTEM	(703)-383-2790
PLANTATION PIPE LINE COMPANY	1-800-510-5676
VERIZON	1-800-837-4966
VIENNA WATER	(703)-255-6385
VIRGINIA AMERICAN WATER COMPANY	1-800-452-6863
WASHINGTON GAS	(703) 750-1000 (GAS LEAK (703) 750-4831)
WILLIAMS (TRANSCO) GAS PIPE LINE CORP.	1-800-440-8475 OR 703-368-3255 OFFICE

TRANSPORTATION PROJECTS/WORK WITHIN THE RIGHT-OF-WAY UTILITIES

Underground VDOT Owned/Maintained Utilities

1. Underground Virginia Department of Transportation (VDOT) Owned and/or Maintained utilities may be present within the project limits. These utilities may include power, communication or other utilities related to street/pedestrian lighting, Intelligent Traffic System (ITS) devices such as Variable Message Signs (VMS), traffic signals and other related facilities.
2. Fairfax County has attempted to show any known underground VDOT owned or maintained utilities on the plans based upon the best available information at the time of design.
3. Miss Utility does not and will not mark the location of underground VDOT Owned and/or Maintained utilities within the project area.
4. At least 48 business day hours in advance of any excavation, the Contractor shall be responsible for requesting that VDOT mark their underground utilities in the field. All requests shall be submitted through the online "Utility Marking System" by registering at the following website:

   a. http: //www.vdotutilitymarking.virginia.gov/Account/Login.aspx?ReturnUrl=%2f
5. The 48 hour time limit does not begin until 7 AM the business day following receipt of the utility location request by VDOT. State holiday and weekends are not considered to be business days. Underground VDOT utility location requests received after 4:30 PM shall be considered to be received by VDOT on the next business day.
6. No excavation shall commence until the underground VDOT utilities have been marked.
7. The Contractor shall be responsible for repair or replacement of underground VDOT owned/maintained utilities that are damaged due to construction operations at no cost to the County.

Utility Relocation Plans

1. Fairfax County has coordinated the proposed improvements with the owners of all known underground utilities in the project area.
2. Underground Utility Test Hole information, noting the horizontal and vertical location of known underground utilities that are in potential conflict with the project, may be included in the plan set or provided to the Contractor at the Pre-Construction Conference, or upon request following award of the construction contract.
3. Where underground utilities are in conflict with the project, Fairfax County often attempts to relocate conflicting utilities prior to the commencement of construction activities. However, as with all construction activities, extreme care shall be taken by the contractor to ensure utility locations are known prior to excavation.
4. Miss Utility may not have the most recent up to date information concerning underground utilities that may have been recently relocated prior to construction.
5. Fairfax County may provide available plans showing the approximate location of recently relocated underground utilities to the Contactor at the Pre-Construction Conference, or upon request following award of the Construction Contract. Where practicable, the utility relocation plans may be included in the Bid Documents.
6. Any known underground utilities that are in conflict with the project that are scheduled to be relocated during construction shall be as noted on the plans and/or special provisions. The Contractor shall be responsible for coordinating these relocations with the appropriate utility company.

For All excavation work ANYWHERE in Virginia!
Always call 811 before you dig in Virginia!

REVISED: AUGUST 2017

95% NOT FOR CONSTRUCTION

EMERGENCY POLICE - FIRE - RESCUE 911

LITTLE HUNTING CREEK
SEWER REPLACEMENT

GENERAL NOTES 2
G-3

PROJECT NO. WW-000024-002-A

FAIRFAX COUNTY, VIRGINIA
DEPARTMENT OF PUBLIC WORKS
AND ENVIRONMENTAL SERVICES

CAPITAL FACILITIES
WASTEWATER DESIGN &
CONSTRUCTION DIVISION
12000 GOVERNMENT CENTER PKWY, SUITE 463
FAIRFAX, VIRGINIA 22035-0052
703-324-5111

| REVISIONS | | |

ENVIRONMENTAL COMPLIANCE PROJECT DATASHEET

FOR THE COLLECTION OF INFORMATION REGARDING REGULATED LAND–DISTURBING ACTIVITIES THAT ARE REVIEWED, APPROVED AND/OR INSPECTED BY STW(MSMD)/WW (i.e., NOT LDS) TO BE REPORTED TO DEQ, IN ACCORDANCE WITH VSMP, VESCP, CBPO, VPDES AND/OR MS4 REQUIREMENTS.

STORMWATER MANAGEMENT INFORMATION TABLE

☐ N/A. THIS PROJECT IS EXEMPT FROM SWMO PURSUANT TO SWMO §124–1–6.4

IS A COUNTY STORMWATER PERMIT (SWMO §124–2–2.A) REQUIRED?
☐ YES (A CONSOLIDATED LAND DISTURBANCE AND STORMWATER PERMIT IS REQUIRED)
☒ NO (ONLY A LAND DISTURBANCE PERMIT IS REQUIRED)

IS STATE VPDES CONSTRUCTION GENERAL PERMIT (9VAC25–880–70) COVERAGE REQUIRED?
☒ YES (DISTURBANCE ≥ 1 ACRE OR PART OF "COMMON PLAN OF DEVELOPMENT OR SALE")
☒ VPDES CGP COVERAGE ISSUED: DATE _____, VAR10_____
☐ NO (VPDES CGP COVERAGE IS NOT REQUIRED PER _____)

THE STORMWATER MANAGEMENT PLAN IS DESIGNED IN ACCORDANCE WITH:

☐ TECHNICAL CRITERIA IN SWMO ARTICLE 4 (NEW)

TYPE OF DEVELOPMENT (SEE SWMO §124–4–2) CHECK ONE ONLY:
☐ NEW DEVELOPMENT ☐ PRIOR DEVELOPED LAND (i.e., REDEVELOPMENT)
☐ NEW AND REDEVELOPMENT (i.e. REDEVELOPMENT WITH A NET INCREASE IN IMPERVIOUS AREA)

OR

☐ TECHNICAL CRITERIA IN SWMO ARTICLE 5 (OLD), QUALIFIES PER (CHECK ONLY ONE):
☐ TIME LIMITS (SWMO §124–1–11), VPDES PERMIT NO. VAR10 _____
☐ GRANDFATHERED (§124–1–12.A, B OR D) ☐ DEQ GM 14–2014

TYPE OF DEVELOPMENT (USING OLD DEFINITION) CHECK ONE:
☐ NEW DEVELOPMENT ☐ REDEVELOPMENT

WATER QUALITY COMPLIANCE ☒ NONE

☐ NON–POINT (A.K.A OFF–SITE) NUTRIENT CREDIT (i.e., PURCHASE) ☐ COMPREHENSIVE SWM PLAN ☐ EXISTING OFF–SITE FACILITY ☐ EXISTING ON–SITE FACILITY

☐ PROPOSED STORMWATER MANAGEMENT FACILITIES: LIST ONLY PROPOSED NEW FACILITIES OR PROPOSED ENHANCEMENT/CONVERSION/RESTORATION OF EXISTING ON–SITE OR OFF–SITE FACILITIES. ALSO INDICATE IF BMP MEETS SWMO REQUIREMENTS OR MS4/TMDL POC REDUCTION CREDIT (e.g., "PARTNERSHIP" PROJECTS).

FACILITY ID NO.	FACILITY TYPE[1]	PURPOSE (QUALITY/ QUANTITY)	AREA TREATED (ACRES)	LATITUDE (DECIMAL DEGREE)	LONGITUDE (DECIMAL DEGREE)	WATERSHED	RECEIVING WATERS	PMA Y/N	VAHU6 CODE	LENGTH/AREA OF FACILITY	UNIT (FT/SF)	NO. OF BLDG. SERVED (FOR ROOFTOP DISCONNECT)	SWMO/MS4 CREDIT[2]

DISTURBED AREA (DA) WITHIN WATERSHED(S):
WATERSHED 1 _____ DA=_____ (ACRES) WATERSHED 2 _____ DA=_____ (ACRES) TOTAL DISTURBED AREA=_____ (ACRES)

[1]FACILITY TYPE IS LIMITED TO ONLY THOSE BMPS APPROVED FOR USE PER: 1) THE BMP CLEARINGHOUSE; 2)PRE–7/1/2014 PFM; OR DEQ MEMO 15–2005 (FOR TMDL CREDIT)

[2]ANSWER "SWMO" IF THE BMP IS TO SATISFY THE WATER QUALITY CONTROL REQUIREMENTS OF THE SWMO FOR THE PROJECT. ANSWER "MS4" IF THE BMP (NEW FACILITY AND/OR ENHANCEMENT, CONVERSION AND/OR RESTORATION) IS TO GENERATE EXCESS POLLUTANT OF CONCERN (POC) REDUCTIONS TO SATISFY MS4 PERMIT OBLIGATIONS (e.g., THE EXCESS POC REDUCTION THAT WILL BE ACHIEVED WILL BE APPLIED TOWARD THE CBAY TMDL SPECIAL CONDITION REQUIREMENTS OF MS4 PERMIT.)

CHESAPEAKE BAY PRESERVATION ORDINANCE (CBPO) TABLE

INFORMATION REGARDING ACTIVITIES IN THE RESOURCE PROTECTION AREA (RPA)

☐ N/A. THE PROJECT LIMITS OF DISTURBANCE DO NOT ENCROACH WITHIN THE RPA

ALLOWED USES WITHIN THE RPA IN ACCORDANCE WITH CBPO §118–2–1:

☐ WATER DEPEDENT, E.G., STORM SEWER OUTFALLS, STREAM STABILIZATION (ALLOWED PER §118–2–1(a))
☐ REDEVELOPMENT (ALLOWED PER CBPO §118–2–1(b))
☐ PRIVATE ROADS AND DRIVEWAYS (ALLOWED PER CBPO §118–2–1(d))

ALLOWED USES IN RPA REQUIRE A WQIA (PER §118–3–3(a).
☐ WQIA INCORPORATED IN (TO BE APPROVED WITH) THE PLAN (PER CBPO §118–4–4).
WQIA COMPONENTS, PER CBPO §118–4–3, INCORPORATED ON SHEET(S) _____

EXEMPT USES WITHIN THE RPA IN ACCORDANCE WITH CBPO §118–5:

☐ MAINTENANCE (PER CBPO §118–5–1(a))
☐ PUBLIC ROADS (PER CBPO §118–5–2(a))
☒ PUBLIC UTILITIES e.g., SANITARY SEWER LINES, INCLUDING PUMP STATIONS (PER CBPO §118–5–2(b))
☐ OTHER EXEMPTIONS, e.g., SITE AMENITIES FOR PASSIVE RECREATION (PER CBPO §118–5–3(a))

EXEMPT USES IN RPA REQUIRE CONFORMANCE WITH CONDITIONS IN CBPO §118–5.
☒ NARRATIVE INCORPORATED IN (TO BE APPROVED WITH) THE PLAN. NARRATIVE ON SHEET(S) EC–1

EXCEPTIONS, WAIVERS, OR OTHER APPROVALS FOR USES WITHIN THE RPA (SEPARATE SUBMISSIONS AND PRIOR APPROVAL REQUIRED):

☐ SEPARATELY APPROVED RPA ENCROACHMENT EXCEPTION: _____–WRPA–_____–_____ (APPROVAL LETTER ON SHEET: ____)
NUMBER OF PRINCIPLE STRUCTURE(S) _____ NUMBER OF ACCESSORY STRUCTURE(S): _____.

☐ SEPARATELY APPROVED WQIA: _____–WQ–_____–___ (APPROVAL LETTER ON SHEET: ____)

PROJECT INFORMATION

PROJECT NAME:	LITTLE HUNTING CREEK SEWER REPLACEMENT PROJECT
PROJECT LOCATION (address):	8701 STOCKTON PARKWAY, ALEXANDER, VA 22308
TAX MAP NUMBER(S):	111–1 ((6)) 6A, 111–1 ((6)) 7A, 111–1 ((21)) 26A
MAGISTERIAL DISTRICT:	MOUNT VERNON
OWNER INFORMATION (name):	DEPARTMENT OF PUBLIC WORKS AND ENVIROMENTAL SERVICES
ADDRESS:	12000 GOVERNMENT CENTER PARKWAY, FAIRFAX VA, 22035
DEVELOPER INFORMATION (name):	FAIRFAX COUNTY GOVERNMENT – DEPARTMENT OF PUBLIC WORKS AND ENVIRONMENTAL SERVICES
ADDRESS:	12000 GOVERNMENT CENTER PARKWAY, SUITE 463 FAIRFAX, VA 22035
E–MAIL:	THOMAS.GRALA@FAIRFAXCOUNTY.GOV
DESIGN ENGINEER (name):	ARCADIS–U.S. INC., DAVID A. HAMILTON, JR., PE
ADDRESS:	ONE CENTERVIEW DRIVE, SUITE 208 GREENSBORO, NC 27407
E–MAIL:	DAVID.HAMILTON@ARCADIS.COM
CONTRACT/FUND NO:	WW–000024–002–A
TOTAL SITE AREA (ACRES):	4.3 ACRES
TOTAL DISTURBED AREA (ACRES):	1.3 ACRES
PRE–DEVELOPMENT IMPERVIOUS AREA (AC):	N/A
POST–DEVELOPMENT IMPERVIOUS AREA (AC):	N/A
WATERSHED:	LITTLE HUNTING CREEK – POTOMAC RIVER
RECEIVING STREAM:	POTOMAC RIVER
STORM DRAINAGE EASEMENT (DB & PG):	N/A

PROJECT APPROVALS

BY SIGNING THE PLAN APPROVALS BELOW, I CERTIFY THAT I HAVE REVIEWED THE PLAN, AND THE RESPECTIVE ELEMENTS MEET OR EXCEED ALL OF THE APPLICABLE LAWS, CODES, ORDINANCES AND REQUIREMENTS.

DATE: APPROVALS BY COUNTY (CAP/STW/WW) STAFF:

EROSION AND SEDIMENT CONTROL PLAN ON SHEET(S): 6 & 7 APPROVED BY: _____ [☐DEQ CERT.#DCA0386 OR ☒ P.E.]	E&S PRIORITY RATING FORM INCLUDED ON SHEET: 13
STORMWATER MANAGEMENT PLAN ON SHEET(S): _____ APPROVED BY: _____ [DEQ CERTIFICATION #DCA0386]	☒ NOT REQUIRED
POLLUTION PREVENTION PLAN ON SHEET(S): _____	
WATER QUALITY IMPACT ASSESSMENT ON SHEET(S): _____ APPROVED BY: _____	☒ NOT REQUIRED ☐ PREVIOUSLY APPROVED
RPA ENCROACHMENT EXCEPTION ON SHEET(S): APPROVED BY: _____	☒ NOT REQUIRED ☐ PREVIOUSLY APPROVED
TREE CONSERVATION PLAN ON SHEET(S): C–2 APPROVED BY: _____	
ADDITIONAL ITEMS BEFORE AUTHORIZATION TO COMMENCE LAND–DISTURBING ACTIVITIES CAN BE GRANTED:	
NON–POINT (A.K.A. OFFSITE) NUTRIENT CREDITS: ☐ UTILIZED NUTRIENT BANK: _____ AMOUNT (POUNDS) _____	☒ NOT UTILIZED
WETLAND PERMIT(S): ☒ REQUIRED USACE: _____ FAIRFAX WETLANDS BOARD _____	☐ NONE REQUIRED
FINAL APPROVAL BY: _____	

95% NOT FOR CONSTRUCTION

EMERGENCY POLICE – FIRE – RESCUE 911

LITTLE HUNTING CREEK SEWER REPLACEMENT

ENVIRONMENTAL COMPLIANCE PROJECT DATASHEET – G–4

PROJECT NO. WW–000024–002–A

FAIRFAX COUNTY, VIRGINIA
DEPARTMENT OF PUBLIC WORKS AND ENVIRONMENTAL SERVICES

CAPITAL FACILITIES

WASTEWATER DESIGN & CONSTRUCTION DIVISION
12000 GOVERNMENT CENTER PKWY, SUITE 463
FAIRFAX, VIRGINIA 22035–0052
703–324–5111

| REVISIONS | | | | | | | | | | | | |

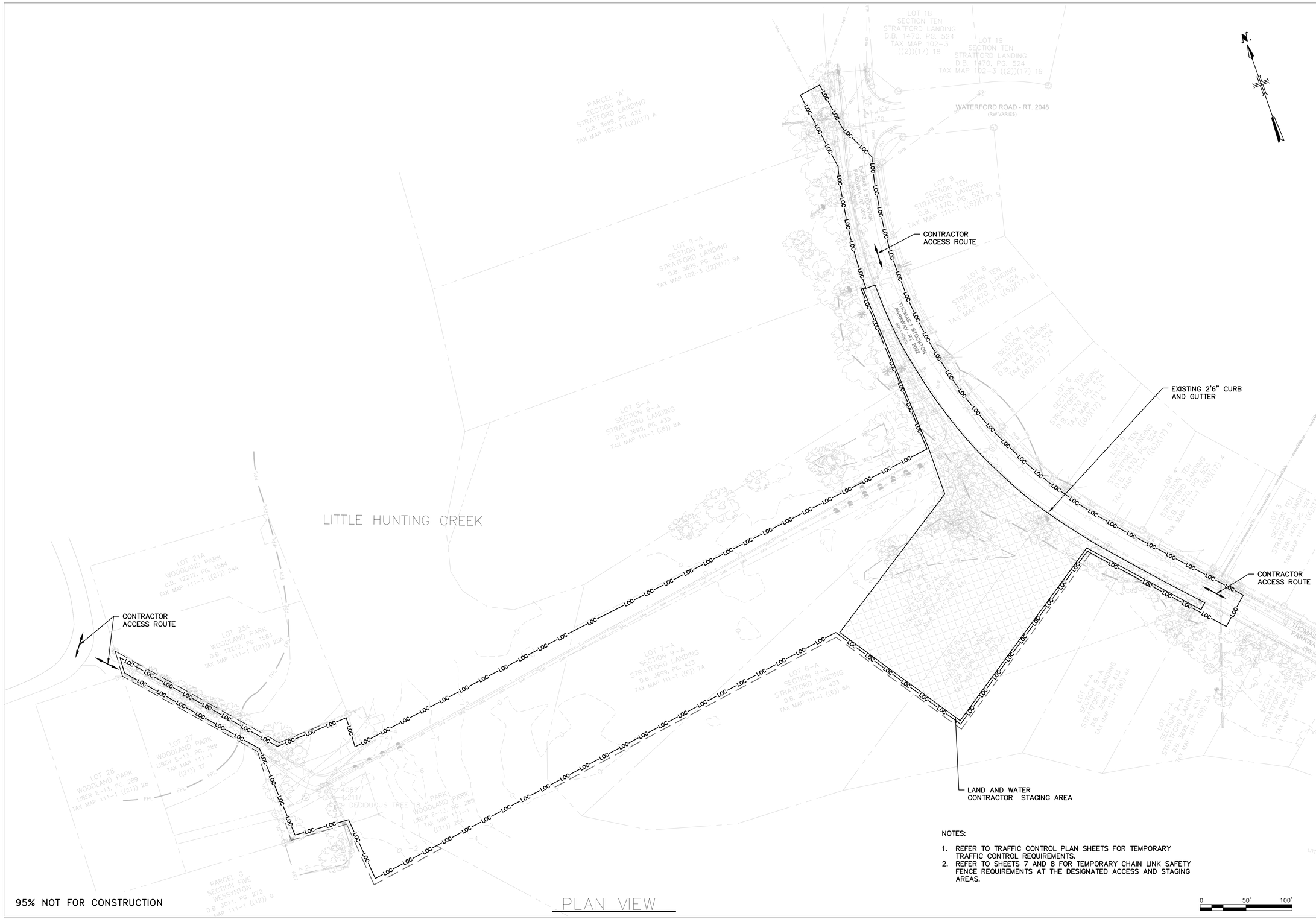

95% NOT FOR CONSTRUCTION

PLAN VIEW

NOTES:

1. REFER TO TRAFFIC CONTROL PLAN SHEETS FOR TEMPORARY TRAFFIC CONTROL REQUIREMENTS.
2. REFER TO SHEETS 7 AND 8 FOR TEMPORARY CHAIN LINK SAFETY FENCE REQUIREMENTS AT THE DESIGNATED ACCESS AND STAGING AREAS.

EMERGENCY POLICE - FIRE - RESCUE 911

LITTLE HUNTING CREEK SEWER REPLACEMENT EXISTING CONDITIONS AND CONTRACTOR ACCESS AND STAGING - C-1

PROJECT NO. WW-000024-002-A

FAIRFAX COUNTY, VIRGINIA
DEPARTMENT OF PUBLIC WORKS AND ENVIRONMENTAL SERVICES

CAPITAL FACILITIES

WASTEWATER DESIGN & CONSTRUCTION DIVISION
12000 GOVERNMENT CENTER PKWY, SUITE 463
FAIRFAX, VIRGINIA 22035-0052
703-324-5111

REVISIONS				
△#	DESCRIPTION	BY	APP BY	DATE

APPR BY THE WASTEWATER DESIGN AND CONSTRUCTION DIVISION

DESIGNED BY: M. PACINI
DRAFTED BY: V. NAGAVENI
CHECKED BY: D. HAMILTON

SCALE
VERT. 1"= N/A
HORIZ. 1"= 50'

SHEET 5 OF 18

FEB 2019

User:WLEAK Spec:AUS-NCSMOD File:C:\ACAD\PROJ\2779 - FAIRFAX COUNTY\2017 WW BOA\AR17-06 - LITTLE HUNTING CREEK\SHEETS\CIVIL\C-1.DWG Scale:1:1 SavedDate:2/6/2019 Time:14:17 Plot Date: Leak, Kent, 2/6/2019; 14:18 ; Layout:C-1

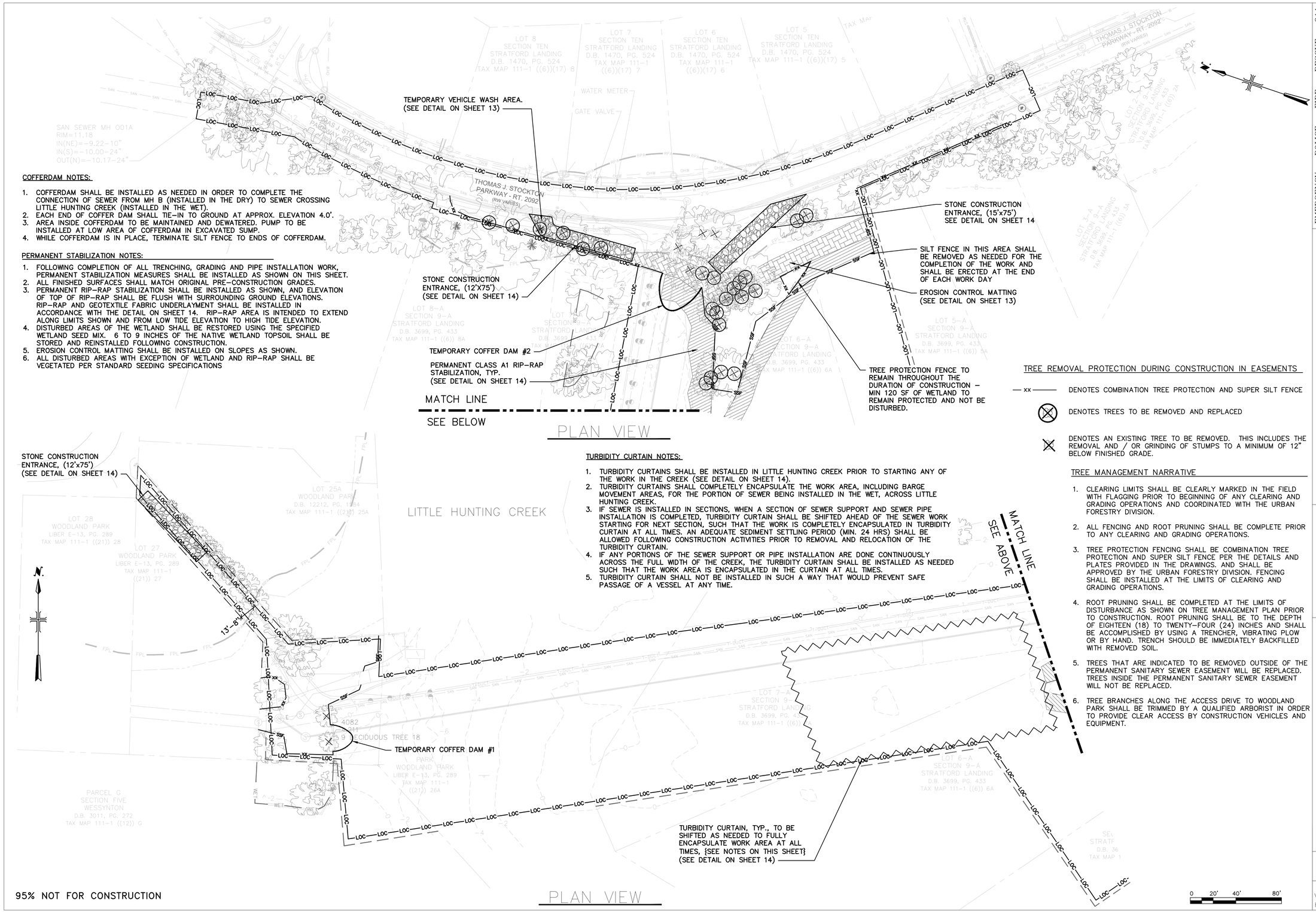

COFFERDAM NOTES:

1. COFFERDAM SHALL BE INSTALLED AS NEEDED IN ORDER TO COMPLETE THE CONNECTION OF SEWER FROM MH B (INSTALLED IN THE DRY) TO SEWER CROSSING LITTLE HUNTING CREEK (INSTALLED IN THE WET).
2. EACH END OF COFFER DAM SHALL TIE-IN TO GROUND AT APPROX. ELEVATION 4.0'.
3. AREA INSIDE COFFERDAM TO BE MAINTAINED AND DEWATERED. PUMP TO BE INSTALLED AT LOW AREA OF COFFERDAM IN EXCAVATED SUMP.
4. WHILE COFFERDAM IS IN PLACE, TERMINATE SILT FENCE TO ENDS OF COFFERDAM.

PERMANENT STABILIZATION NOTES:

1. FOLLOWING COMPLETION OF ALL TRENCHING, GRADING AND PIPE INSTALLATION WORK, PERMANENT STABILIZATION MEASURES SHALL BE INSTALLED AS SHOWN ON THIS SHEET.
2. ALL FINISHED SURFACES SHALL MATCH ORIGINAL PRE-CONSTRUCTION GRADES.
3. PERMANENT RIP-RAP STABILIZATION SHALL BE INSTALLED AS SHOWN, AND ELEVATION OF TOP OF RIP-RAP SHALL BE FLUSH WITH SURROUNDING GROUND ELEVATIONS. RIP-RAP AND GEOTEXTILE FABRIC UNDERLAYMENT SHALL BE INSTALLED IN ACCORDANCE WITH THE DETAIL ON SHEET 14. RIP-RAP AREA IS INTENDED TO EXTEND ALONG LIMITS SHOWN AND FROM LOW TIDE ELEVATION TO HIGH TIDE ELEVATION.
4. DISTURBED AREAS OF THE WETLAND SHALL BE RESTORED USING THE SPECIFIED WETLAND SEED MIX. 6 TO 9 INCHES OF THE NATIVE WETLAND TOPSOIL SHALL BE STORED AND REINSTALLED FOLLOWING CONSTRUCTION.
5. EROSION CONTROL MATTING SHALL BE INSTALLED ON SLOPES AS SHOWN.
6. ALL DISTURBED AREAS WITH EXCEPTION OF WETLAND AND RIP-RAP SHALL BE VEGETATED PER STANDARD SEEDING SPECIFICATIONS

TURBIDITY CURTAIN NOTES:

1. TURBIDITY CURTAINS SHALL BE INSTALLED IN LITTLE HUNTING CREEK PRIOR TO STARTING ANY OF THE WORK IN THE CREEK (SEE DETAIL ON SHEET 14).
2. TURBIDITY CURTAINS SHALL COMPLETELY ENCAPSULATE THE WORK AREA, INCLUDING BARGE MOVEMENT AREAS, FOR THE PORTION OF SEWER BEING INSTALLED IN THE WET, ACROSS LITTLE HUNTING CREEK.
3. IF SEWER IS INSTALLED IN SECTIONS, WHEN A SECTION OF SEWER SUPPORT AND SEWER PIPE INSTALLATION IS COMPLETED, TURBIDITY CURTAIN SHALL BE SHIFTED AHEAD OF THE SEWER WORK STARTING FOR NEXT SECTION, SUCH THAT THE WORK IS COMPLETELY ENCAPSULATED IN TURBIDITY CURTAIN AT ALL TIMES. AN ADEQUATE SEDIMENT SETTLING PERIOD (MIN. 24 HRS) SHALL BE ALLOWED FOLLOWING CONSTRUCTION ACTIVITIES PRIOR TO REMOVAL AND RELOCATION OF THE TURBIDITY CURTAIN.
4. IF ANY PORTIONS OF THE SEWER SUPPORT OR PIPE INSTALLATION ARE DONE CONTINUOUSLY ACROSS THE FULL WIDTH OF THE CREEK, THE TURBIDITY CURTAIN SHALL BE INSTALLED AS NEEDED SUCH THAT THE WORK AREA IS ENCAPSULATED IN THE CURTAIN AT ALL TIMES.
5. TURBIDITY CURTAIN SHALL NOT BE INSTALLED IN SUCH A WAY THAT WOULD PREVENT SAFE PASSAGE OF A VESSEL AT ANY TIME.

TREE REMOVAL PROTECTION DURING CONSTRUCTION IN EASEMENTS

— xx — DENOTES COMBINATION TREE PROTECTION AND SUPER SILT FENCE

DENOTES TREES TO BE REMOVED AND REPLACED

DENOTES AN EXISTING TREE TO BE REMOVED. THIS INCLUDES THE REMOVAL AND / OR GRINDING OF STUMPS TO A MINIMUM OF 12" BELOW FINISHED GRADE.

TREE MANAGEMENT NARRATIVE

1. CLEARING LIMITS SHALL BE CLEARLY MARKED IN THE FIELD WITH FLAGGING PRIOR TO BEGINNING OF ANY CLEARING AND GRADING OPERATIONS AND COORDINATED WITH THE URBAN FORESTRY DIVISION.
2. ALL FENCING AND ROOT PRUNING SHALL BE COMPLETE PRIOR TO ANY CLEARING AND GRADING OPERATIONS.
3. TREE PROTECTION FENCING SHALL BE COMBINATION TREE PROTECTION AND SUPER SILT FENCE PER THE DETAILS AND PLATES PROVIDED IN THE DRAWINGS. AND SHALL BE APPROVED BY THE URBAN FORESTRY DIVISION. FENCING SHALL BE INSTALLED AT THE LIMITS OF CLEARING AND GRADING OPERATIONS.
4. ROOT PRUNING SHALL BE COMPLETED AT THE LIMITS OF DISTURBANCE AS SHOWN ON TREE MANAGEMENT PLAN PRIOR TO CONSTRUCTION. ROOT PRUNING SHALL BE TO THE DEPTH OF EIGHTEEN (18) TO TWENTY-FOUR (24) INCHES AND SHALL BE ACCOMPLISHED BY USING A TRENCHER, VIBRATING PLOW OR BY HAND. TRENCH SHOULD BE IMMEDIATELY BACKFILLED WITH REMOVED SOIL.
5. TREES THAT ARE INDICATED TO BE REMOVED OUTSIDE OF THE PERMANENT SANITARY SEWER EASEMENT WILL BE REPLACED. TREES INSIDE THE PERMANENT SANITARY SEWER EASEMENT WILL NOT BE REPLACED.
6. TREE BRANCHES ALONG THE ACCESS DRIVE TO WOODLAND PARK SHALL BE TRIMMED BY A QUALIFIED ARBORIST IN ORDER TO PROVIDE CLEAR ACCESS BY CONSTRUCTION VEHICLES AND EQUIPMENT.

95% NOT FOR CONSTRUCTION

EMERGENCY POLICE – FIRE – RESCUE 911

LITTLE HUNTING CREEK SEWER REPLACEMENT

EROSION CONTROL AND TREE MANAGEMENT PLAN – C-2

PROJECT NO. WW-000024-002-A

FAIRFAX COUNTY, VIRGINIA
DEPARTMENT OF PUBLIC WORKS AND ENVIRONMENTAL SERVICES

CAPITAL FACILITIES
WASTEWATER DESIGN & CONSTRUCTION DIVISION
12000 GOVERNMENT CENTER PKWY, SUITE 463
FAIRFAX, VIRGINIA 22035-0052
703-324-5111

REVISIONS				
△#	DESCRIPTION	BY	APP BY	DATE

APPR BY THE WASTEWATER DESIGN AND CONSTRUCTION DIVISION

DESIGNED BY: M. PACINI
DRAFTED BY: V. NAGAVENI
CHECKED BY: D. HAMILTON

SCALE
VERT. 1"= N/A
HORIZ. 1"= 40'

SHEET 6 OF 18

FEB 2019

User: MLEAK Spec: AUS-NCSMOD File: C:\ACAD\PROJ\2779 – FAIRFAX COUNTY\2017 WW BOA\AR17-06 – LITTLE HUNTING CREEK\SHEETS\CIVIL\C-2 _EROSION CONTROL AND TREE MANAGEMENT PLAN.DWG Scale:1:1 SavedDate:2/7/2019 Time:16:30 Plot Date: Leak, Ken; 2/7/2019; 16:30 ; Layout:C-2

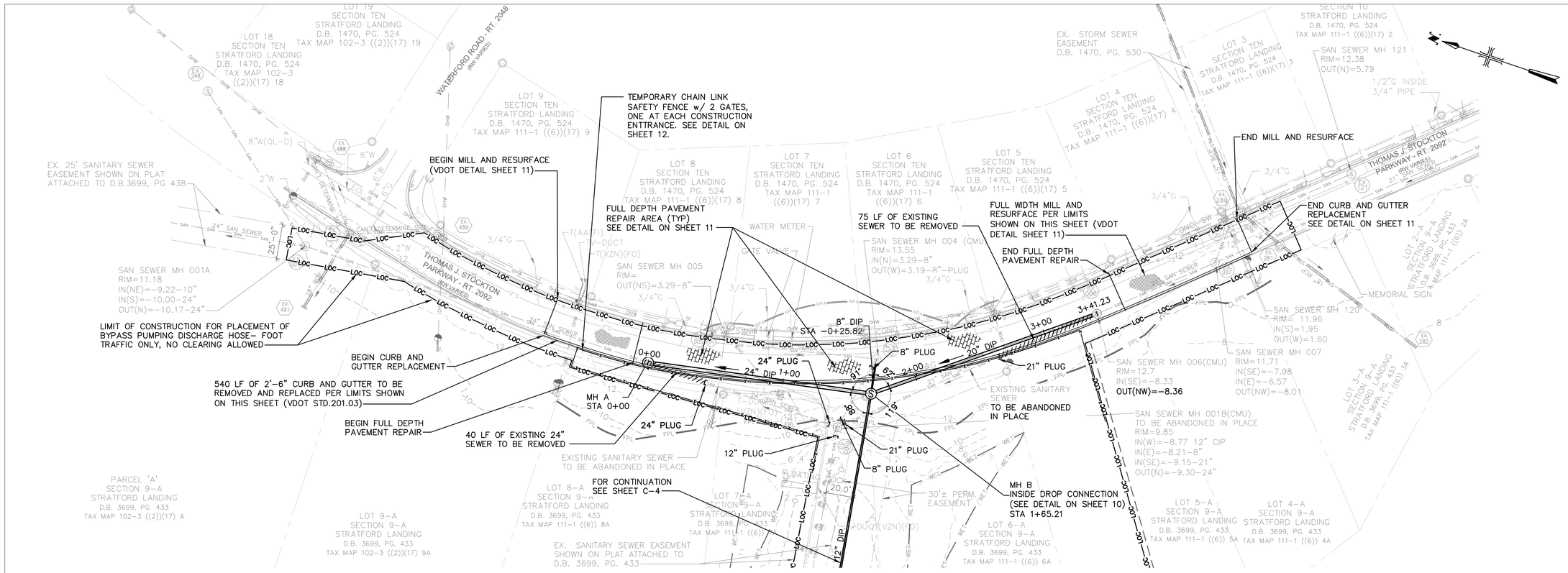

PLAN VIEW

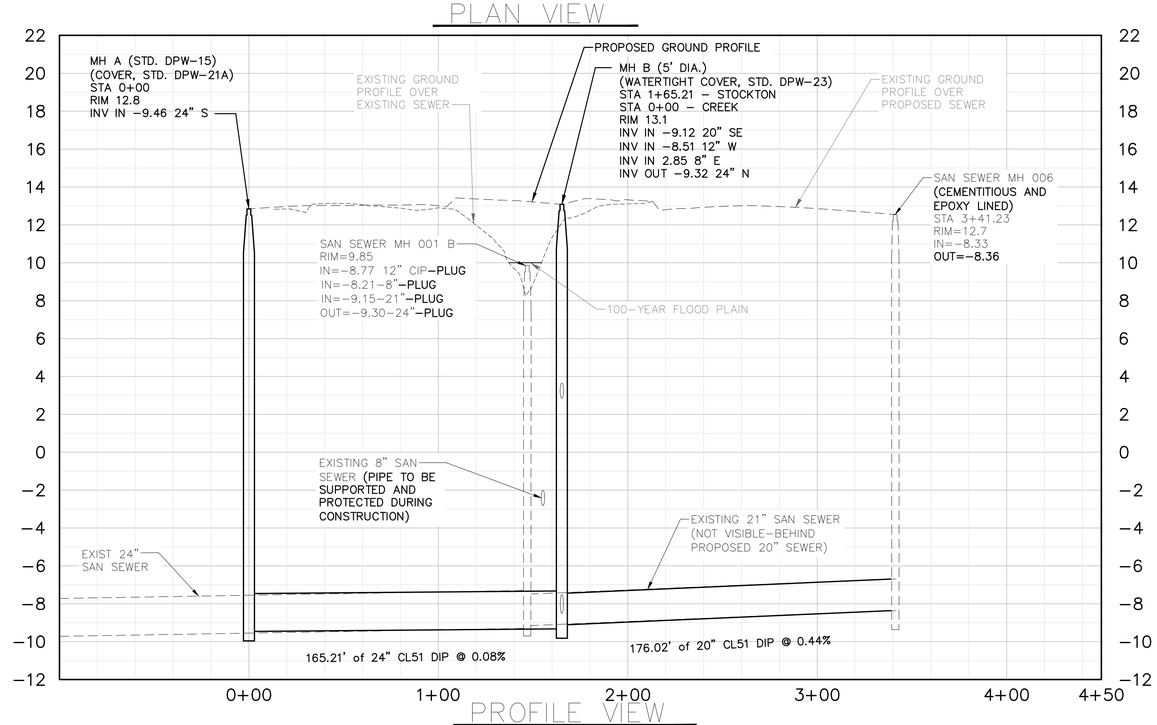

PROFILE VIEW

NOTES:

1. SANITARY SEWER PLUGS SHOWN ARE PERMANENT PLUGS THAT SHALL BE INSTALLED AFTER ADJACENT PIPE IS ABANDONED.
2. TREES ON THIS SHEET NOT SHOWN FOR CLARITY. SEE SHEET 6.
3. SEWER ON THIS SHEET SHALL BE CONSTRUCTED PER THE SEQUENCE PROVIDED IN THE BYPASS PUMPING NARRATIVE ON SHEET 9.
4. INSTALL TEMPORARY CHAIN LINK FENCE PRIOR TO USING THE DESIGNATED AREA FOR CONSTRUCTION ACCESS AND/OR STAGING, AND MAINTAIN THE FENCE THROUGHOUT THE DURATION OF THE CONSTRUCTION. COORDINATE LOCATION OF FENCE WITH OWNER AND ENGINEER. FENCE SHALL EXTEND TO EDGE OF WATER TO EFFECTIVELY RESTRICT VEHICULAR AND PEDESTRIAN ACCESS. REMOVE AND REINSTALL FENCE AS NEEDED FOR PIPE INSTALLATION. PROVIDE COMBINATION LOCK FOR USE BY CONTRACTOR AND OWNER.

HORIZ: 0 20' 40' 80'
VERT: 0 4' 8'

95% NOT FOR CONSTRUCTION

EMERGENCY POLICE – FIRE – RESCUE 911

LITTLE HUNTING CREEK SEWER REPLACEMENT

PLAN AND PROFILE STOCKTON PARKWAY – C–3

PROJECT NO. WW–000024–002–A

FAIRFAX COUNTY, VIRGINIA
DEPARTMENT OF PUBLIC WORKS AND ENVIRONMENTAL SERVICES

CAPITAL FACILITIES
WASTEWATER DESIGN & CONSTRUCTION DIVISION
12000 GOVERNMENT CENTER PKWY, SUITE 463
FAIRFAX, VIRGINIA 22035–0052
703–324–5111

REVISIONS	#	DESCRIPTION	BY	APP BY	DATE

APPR BY THE WASTEWATER DESIGN AND CONSTRUCTION DIVISION

DESIGNED BY: M. PACINI
DRAFTED BY: V. NAGAVENI
CHECKED BY: D. HAMILTON

SCALE
VERT. 1"= 4'
HORIZ. 1"= 40'

SHEET 7 OF 18

FEB 2019

User: WLEAK Spec: AUS–NCSMOD File: C:\ACAD\PROJ\2779 – FAIRFAX COUNTY\2017 WW BOA\AR17–06 – LITTLE HUNTING CREEK\SHEETS\CIVIL\C–3 AND C–4_PLAN AND PROFILE.DWG Scale: 1:1 SavedDate: 2/7/2019 Time: 16:23 Plot Date: Leak, Ken: 2/7/2019; 16:23 ; Layout: C–3

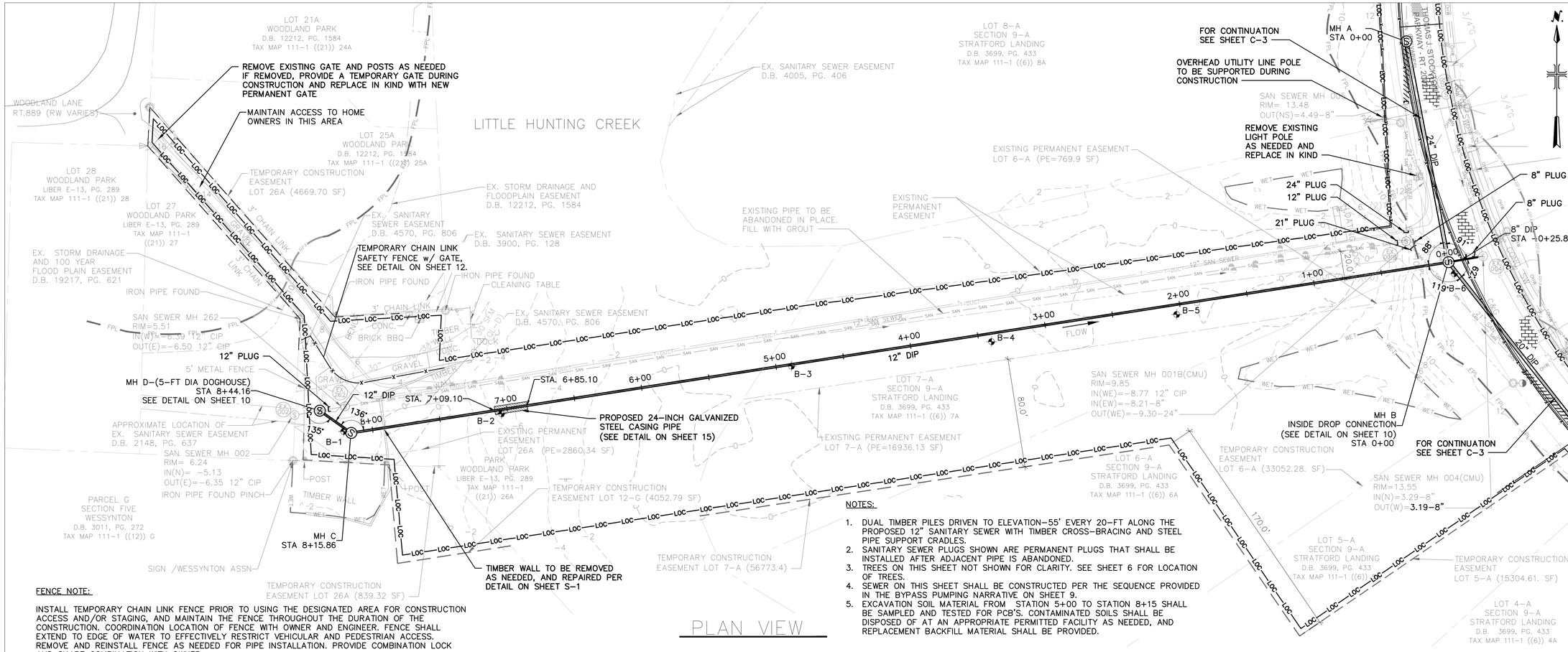

NOTES:

1. DUAL TIMBER PILES DRIVEN TO ELEVATION-55' EVERY 20-FT ALONG THE PROPOSED 12" SANITARY SEWER WITH TIMBER CROSS-BRACING AND STEEL PIPE SUPPORT CRADLES.
2. SANITARY SEWER PLUGS SHOWN ARE PERMANENT PLUGS THAT SHALL BE INSTALLED AFTER ADJACENT PIPE IS ABANDONED.
3. TREES ON THIS SHEET NOT SHOWN FOR CLARITY. SEE SHEET 6 FOR LOCATION OF TREES.
4. SEWER ON THIS SHEET SHALL BE CONSTRUCTED PER THE SEQUENCE PROVIDED IN THE BYPASS PUMPING NARRATIVE ON SHEET 9.
5. EXCAVATION SOIL MATERIAL FROM STATION 5+00 TO STATION 8+15 SHALL BE SAMPLED AND TESTED FOR PCB'S. CONTAMINATED SOILS SHALL BE DISPOSED OF AT AN APPROPRIATE PERMITTED FACILITY AS NEEDED, AND REPLACEMENT BACKFILL MATERIAL SHALL BE PROVIDED.

FENCE NOTE:

INSTALL TEMPORARY CHAIN LINK FENCE PRIOR TO USING THE DESIGNATED AREA FOR CONSTRUCTION ACCESS AND/OR STAGING, AND MAINTAIN THE FENCE THROUGHOUT THE DURATION OF THE CONSTRUCTION. COORDINATION LOCATION OF FENCE WITH OWNER AND ENGINEER. FENCE SHALL EXTEND TO EDGE OF WATER TO EFFECTIVELY RESTRICT VEHICULAR AND PEDESTRIAN ACCESS. REMOVE AND REINSTALL FENCE AS NEEDED FOR PIPE INSTALLATION. PROVIDE COMBINATION LOCK AND SHARE COMBINATION WITH OWNER.

PLAN VIEW

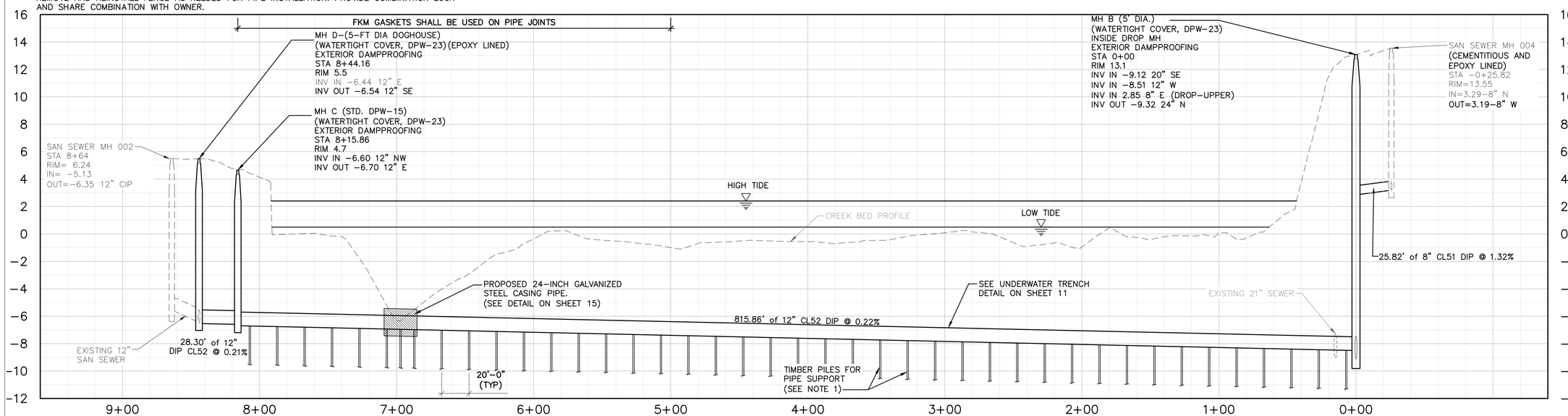

PROFILE VIEW

95% NOT FOR CONSTRUCTION

HORIZ: 0 20' 40' 80' VERT: 0 4' 8'

EMERGENCY POLICE - FIRE - RESCUE 911

LITTLE HUNTING CREEK SEWER REPLACEMENT

PLAN AND PROFILE CREEK CROSSING - C-4

PROJECT NO. WW-000024-002-A

FAIRFAX COUNTY, VIRGINIA
DEPARTMENT OF PUBLIC WORKS AND ENVIRONMENTAL SERVICES

CAPITAL FACILITIES
WASTEWATER DESIGN & CONSTRUCTION DIVISION
12000 GOVERNMENT CENTER PKWY, SUITE 463
FAIRFAX, VIRGINIA 22035-0052
703-324-5111

#	DESCRIPTION	BY	APP BY	DATE
	REVISIONS			

APPR BY THE WASTEWATER DESIGN AND CONSTRUCTION DIVISION

DESIGNED BY: M. PACINI
DRAFTED BY: V. NAGAVENI
CHECKED BY: D.HAMILTON

SCALE VERT. 1"= 4' HORIZ. 1"= 40'

SHEET 8 OF 18

FEB 2019

User: WLEAK Spec: AUS-NCSMCD File: C:\ACAD\PROJ\2779 - FAIRFAX COUNTY\2017 WW BOA\AR17-06 - LITTLE HUNTING CREEK\SHEETS\CIVIL\C-3 AND C-4_PLAN AND PROFILE.DWG Scale:1:1 SavedDate:2/7/2019 Time:16:28 Plot Date: Leak, Ken; 2/7/2019; 16:29 ; Layout:C-4

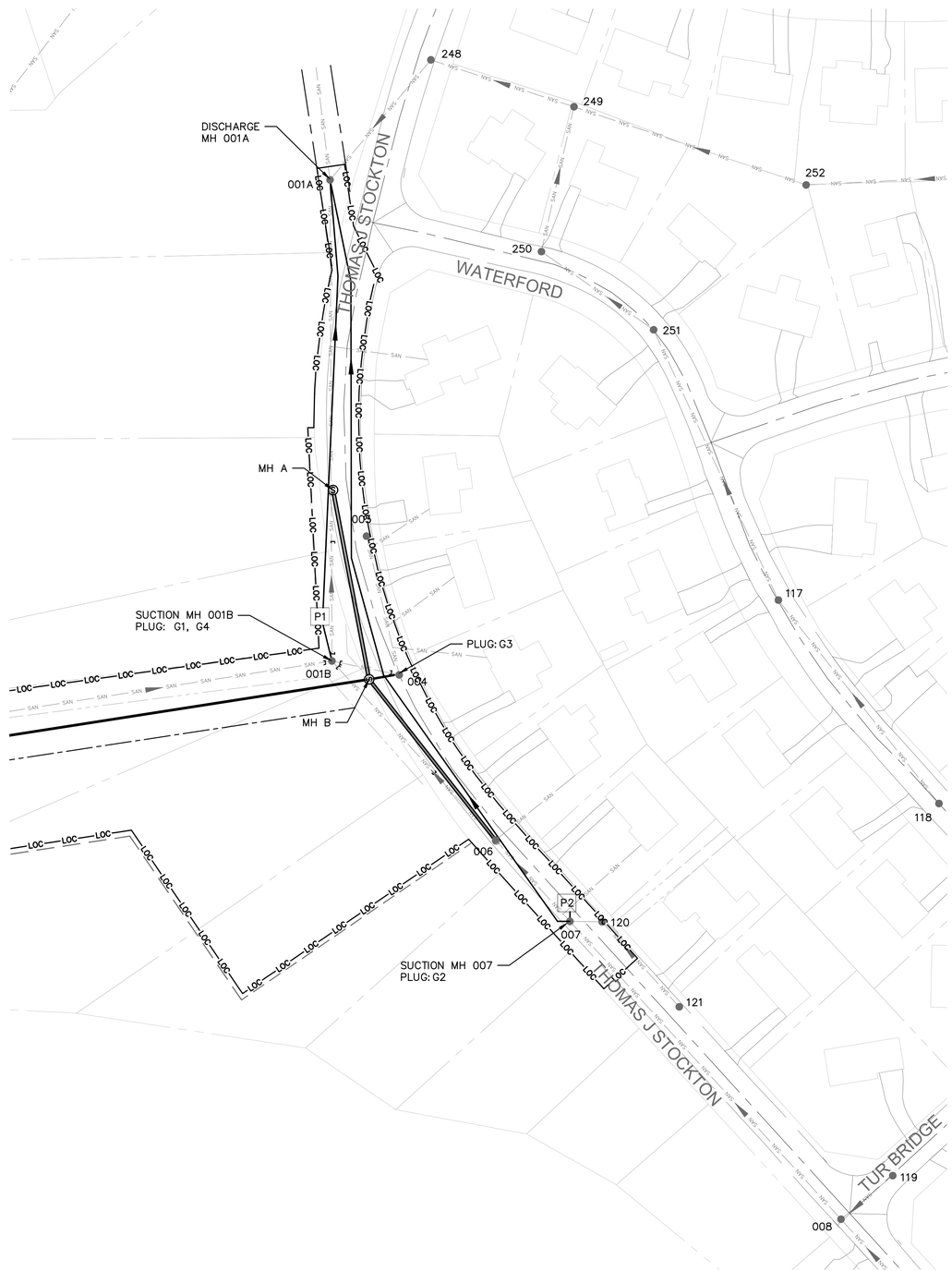

95% NOT FOR CONSTRUCTION

NOTES:

BYPASS NARRATIVE

SUBMIT BYPASS PUMPING SYSTEM DESIGN IN ACCORDANCE WITH THE SPECIFICATIONS. THE BYPASS PUMPING SYSTEM SHALL BE INSTALLED AND TESTED ACCORDING TO THE SPECIFICATIONS AND APPROVED BYPASS PUMPING PLAN BEFORE ANY WORK BEGINS. REFER TO THE SUGGESTED SEQUENCE BELOW, THE PUMP SCHEDULE, AND PLUG SCHEDULE ON THIS SHEET FOR DETAILS OF THE BYPASS PUMPING SYSTEM.

THE BYPASS PUMPING AND SEWER INSTALLATION SEQUENCE PROVIDED BELOW IS A FEASIBLE APPROACH THAT WILL KEEP THE EXISTING SEWER SYSTEM IN SERVICE THROUGHOUT THE CONSTRUCTION AND WHILE MAKING ALL THE NECESSARY CONNECTIONS OF NEW TO EXISTING SEWER. ALTERNATE SEQUENCES WILL ONLY BE CONSIDERED ON THE BASIS THAT THEY WILL REDUCE THE AMOUNT OF TIME OR COMPLEXITY OF BYPASS PUMPING REQUIRED.

STEP 1

INSTALL THE 12-INCH SEWER FROM APPROX. STA 0+50 (ON SHEET C-4) TO DOGHOUSE MH D PRIOR TO INSTALLING THE SEWER IN STOCKTON PARKWAY. FLOW SHOULD NOT BE RELEASED UNTIL STEPS 2 THROUGH 8 ARE COMPLETE. BYPASS PUMPING WILL NOT BE REQUIRED DURING THE INSTALLATION OF THE SEWER CROSSING LITTLE HUNTING CREEK. ALL EXISTING SEWER SHALL REMAIN IN SERVICE DURING THIS WORK.

STEP 2

INSTALL SEWER IN STOCKTON PARKWAY STARTING APPROX. 10-FT OUTSIDE OF MH A BUT NOT INCLUDING THE INSTALLATION OF MH A, AND CONTINUE INSTALLATION TO MH B. THE EXISTING SEWER AT THE PROPOSED LOCATION OF MH A SHALL REMAIN UNINTERRUPTED. BYPASS PUMPING WILL NOT BE REQUIRED DURING THIS INSTALLATION.

STEP 3

CONTINUE LAYING 20" DIP FROM MH B UPSTREAM TOWARDS MH 006 WHILE MAINTAINING THE EXISTING SEWER IN SERVICE. ONCE TRENCHING IS NO LONGER POSSIBLE WITHOUT THE INTERRUPTION OF THE EXISTING SEWER FROM MH 001B TO MH 006, INSTALL PLUG G2 ON EXISTING 21" AND PUMP P2 AND COMMENCE BYPASS PUMPING FROM MH 007 TO MH 001A. WHILE BYPASS PUMPING, COMPLETE THE INSTALLATION OF THE SEWER FROM MH B TO MH 006.

STEP 4

FOLLOWING THE COMPLETION OF THE 20" SEWER CONNECTION TO MH 006, INSTALL PLUG G1 AND PUMP P1 AND BEGIN BYPASS PUMPING FROM MH 001B TO MH 001A. COMBINING THE BYPASS FLOWS AND USING A COMMON DISCHARGE LINE SHALL BE AT THE CONTRACTOR'S DISCRETION AND SUBJECT TO REVIEW AS PART OF THE BYPASS PUMPING PLAN SUBMITTAL.

STEP 5

ONCE THE COMPLETE BYPASS PUMPING SYSTEM IS IN OPERATION, PROCEED TO INSTALL MH A AND THE REMAINING SEWER CONNECTION TO MH A.

STEP 6

INSTALL SEWER FROM MH B TO MH 004. WHEN INTERRUPTION OF THE SEWER FROM MH 004 TO MH 001B BECOMES NECESSARY, INSTALL PLUG G3 TO REMAIN DURING THE COMPLETION OF THE CONNECTION TO MH 004. PRIOR TO INSTALLATION OF PLUG G3, COORDINATE WITH THE HOMEOWNERS TO ESTABLISH TIMES OF LOW SEWER FLOW AND INSTALL PLUG G3 ACCORDINGLY.

STEP 7

IMMEDIATELY FOLLOWING THE INSTALLATION, TESTING AND ACCEPTANCE OF THE NEW SEWER FROM MH B TO MH 004, REMOVE PLUG G3 AND RELEASE FLOW INTO THE NEW SEWER.

STEP 8

WHILE THE BYPASS PUMPING IS STILL IN OPERATION, INSTALL SEWER FROM MH B TO PREVIOUSLY INSTALLED 12-INCH SEWER AT APPROX. STA 0+50. REINSTALL PLUG G3 IN MH 004, AS NEEDED WHILE CONNECTING 12-INCH PIPE TO MH B. IMMEDIATELY FOLLOWING THE INSTALLATION OF FIRST PIECE OF PIPE OUT OF MH B, INSTALL PLUG G4, TO REMAIN IN PLACE UNTIL STEP 10. ONCE PLUG G4 IS IN PLACE, REMOVE PLUG G3.

STEP 9

ONCE MH A AND THE NEW SEWER FROM MH A TO MH 006, MH B TO MH D, AND MH B TO MH 004 IS FULLY INSTALLED, TESTED AND ACCEPTED, TURN FLOW IN DOGHOUSE MH D INTO THE NEW SEWER, AND INSTALL PERMANENT PLUGS IN THE EXISTING SEWER PIPES AS SHOWN.

STEP 10

REMOVE PLUGS G1, AND G4 AND TAKE THE BYPASS PUMPING OPERATION OUT OF SERVICE AND REMOVE THE EQUIPMENT FROM THE SITE.

BYPASS PUMPING NOTES AND SCHEDULES

ALL SEWER LATERAL CONNECTIONS TO THE NEW SEWER SHALL BE COORDINATED WITH THE HOMEOWNERS PRIOR TO ANY INSTALLATION SO THAT THE WORK CAN BE COMPLETED DURING LOW FLOW CONDITIONS.

SAFETY BARRIERS SHALL BE INSTALLED SURROUNDING ALL BYPASS PUMPING EQUIPMENT AND THE SUCTION AND DISCHARGE MANHOLES.

ALL WORK AS PART OF THE SEWER BYPASS PUMPING SHALL TAKE PLACE WITHIN DESIGNATED LIMITS OF CONSTRUCTION, SEWER EASEMENTS, AND ROAD RIGHT-OF-WAY, INCLUDING THE ROUTING OF PUMP DISCHARGE HOSES/PIPING.

LOCATIONS OF SEWER LATERALS SHOWN ARE APPROXIMATE AND SHALL BE FIELD VERIFIED.

PUMP SCHEDULE:

	SUCTION MANHOLE ID	PIPE SIZE (IN)	AVERAGE DAILY FLOW RATE (GPD)	PEAK FLOW RATE (GPD)	SURFACE ELEVATION (FT)	DEPTH (RIM TO INVERT) (FT)	HEIGHT (RIM TO GROUND SURFACE ELEV.) (FT)
P1	001B	24	572,390	2,289,560	10.00	19.13	1.18
P2	007	21	393,317	1,573,268	11.71	19.72	0

NOTE: MULTIPLE PUMPS MAY BE NECESSARY AT CERTAIN LOCATIONS TO MEET FLOW AND HEAD REQUIREMENTS. FLOWS LISTED IN THE TABLE ABOVE ARE ESTIMATED BASED ON A COUNT OF THE CUSTOMERS (HOMES, ETC.) IN THE SEWER DRAINAGE AREA. CONTRACTOR TO EVALUATE FLOWS PRIOR TO BYPASS PUMPING SUBMITTAL.

PLUG SCHEDULE:

	MANHOLE ID	PIPE SIZE (IN)	POSITION
G1	001B	24	EFFLUENT
G2	007	21	EFFLUENT
G3	004	8	INFLUENT
G4	B	12	INFLUENT

LEGEND:

Px	PUMP
Gx	PLUG
	BYPASS PIPING
— SAN — SAN — SAN —	EXISTING SANITARY SEWER
	PROPOSED SANITARY SEWER
	EXISTING MANHOLE
MH S	PROPOSED MANHOLE

0 30' 60' 120'

EMERGENCY POLICE - FIRE - RESCUE 911

LITTLE HUNTING CREEK
SEWER REPLACEMENT

BYPASS PUMPING PLAN
C-5

PROJECT NO. WW-000024-002-A

FAIRFAX COUNTY, VIRGINIA
DEPARTMENT OF PUBLIC WORKS
AND ENVIRONMENTAL SERVICES

CAPITAL FACILITIES
WASTEWATER DESIGN &
CONSTRUCTION DIVISION
12000 GOVERNMENT CENTER PKWY, SUITE 463
FAIRFAX, VIRGINIA 22035-0052
703-324-5111

REVISIONS				
△#	DESCRIPTION	BY	APP BY	DATE

APPR BY THE WASTEWATER DESIGN AND CONSTRUCTION DIVISION

DESIGNED BY: M. PACINI
DRAFTED BY: V. NAGAVENI
CHECKED BY: D. HAMILTON

SCALE
VERT. 1"= N/A
HORIZ. 1"= 60'

SHEET 9 OF 18

FEB 2019

User:WLEAK Spec:AUS-NCSMOD File:C:\ACAD\PROJ\2779 - FAIRFAX COUNTY\2017 WW BOA\AR17-06 - LITTLE HUNTING CREEK\SHEETS\CIVIL\C-5_BYPASS PUMPING PLAN.DWG Scale:1:1 SavedDate:2/6/2019 Time:16:31 Plot Date: Leak, Ken; 2/6/2019; 16:31 ; Layout:C-5

NOTES:

1. Manhole to meet current requirements of ASTM Spec. C-478.
2. All reinforcing steel to meet current requirements of ASTM Spec. A-615.
3. Concrete to be Class A-4.
4. Tapered joint with O-ring gasket, or single offset joint with rubber gasket, to meet current requirements of ASTM Spec. C-361.
5. Pioneer 301 Mastic or approved equal shall be used in addition to the joint specified.
6. Grout inverts shall consist of a Portland Cement concrete mix to VDOT Spec. for Class B-2 or containing 1 part cement, 2 parts mortar sand and 3 1/2 parts aggregate. The surface shall be hand troweled smooth with no coarse aggregate exposed and the benches are to have a light broom finish.
7. Flexible joint required on all pipe connections to manholes. Flexible Joint pipe to manhole sleeve may be Kor-N-Seal, Interspace, Presswedge or approved equal. Installation shall be in accordance with manufacturer's instructions. Where field conditions will not permit the use of a sleeve, a maximum 24" stub may be used. (See Section 10.0102.5G.)
8. Joint configuration may be cast bell-up or spigot-up.
9. Manufacturer's name to be cast in steps or on inside face of cone and is to be clearly visible without entering the structure.

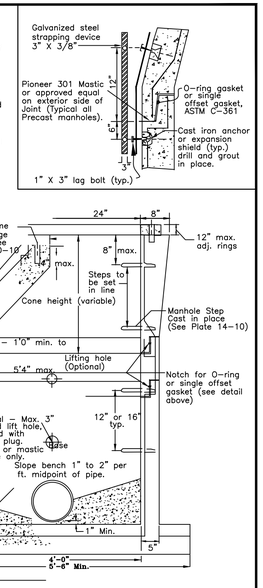

Ref. Sec. 10-0102.5D(7) Ref. Plate 4-10	TYPICAL 4'-0" ID PRECAST CONCRETE MANHOLE	PLATE NO.	STD. NO.
Rev. 1-00		3-10	DPW-15

Material:
Gray iron

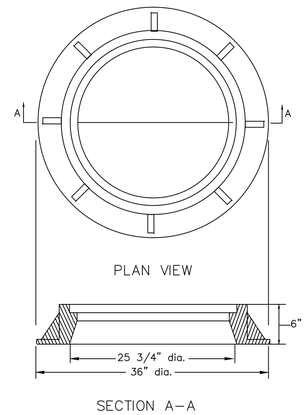

Ref. Sec. 10-0102.5D(7) Ref. Plate 4-10	STANDARD ROADWAY FRAME	PLATE NO.	STD. NO.
Rev. 1-00		8-10	DPW-21

Material:
Gray iron

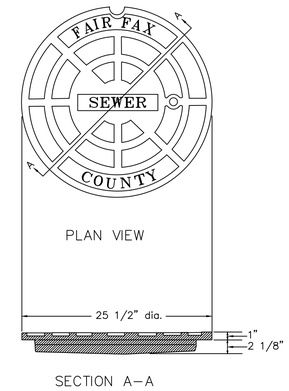

Ref. Sec. 10-0102.5D(7) Ref. Plate 4-10	STANDARD ROADWAY MANHOLE COVER	PLATE NO.	STD. NO.
Rev. 1-00		9-10	DPW-21A

Material:
Gray iron

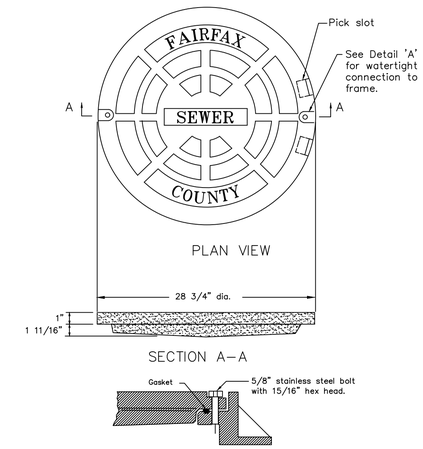

Ref. Sec. 10-0102.5D(7) Ref. Plate 4-10 (42-94-PFM)	WATERTIGHT MANHOLE COVER	PLATE NO.	STD. NO.
		11-10	DPW-23

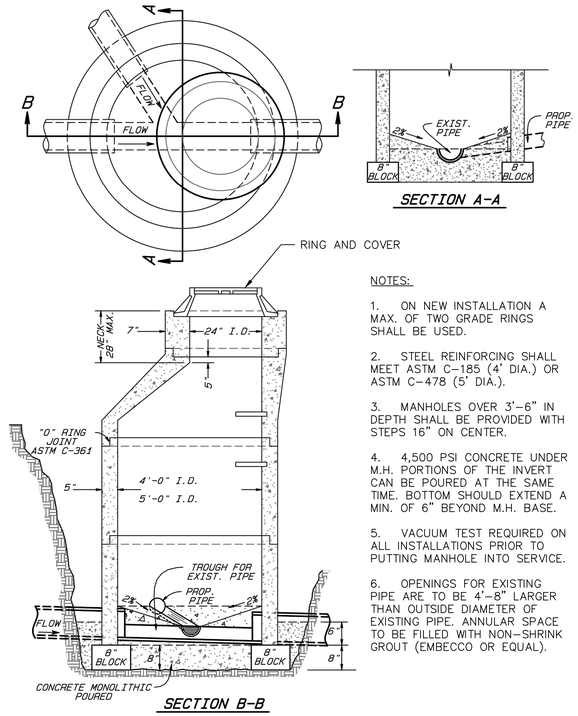

NOTES:

1. ON NEW INSTALLATION A MAX. OF TWO GRADE RINGS SHALL BE USED.
2. STEEL REINFORCING SHALL MEET ASTM C-185 (4' DIA.) OR ASTM C-478 (5' DIA.).
3. MANHOLES OVER 3'-6" IN DEPTH SHALL BE PROVIDED WITH STEPS 16" ON CENTER.
4. 4,500 PSI CONCRETE UNDER M.H. PORTIONS OF THE INVERT CAN BE POURED AT THE SAME TIME. BOTTOM SHOULD EXTEND A MIN. OF 6" BEYOND M.H. BASE.
5. VACUUM TEST REQUIRED ON ALL INSTALLATIONS PRIOR TO PUTTING MANHOLE INTO SERVICE.
6. OPENINGS FOR EXISTING PIPE ARE TO BE 4'-8" LARGER THAN OUTSIDE DIAMETER OF EXISTING PIPE. ANNULAR SPACE TO BE FILLED WITH NON-SHRINK GROUT (EMBECCO OR EQUAL).

DOGHOUSE MANHOLE (MH D) DETAIL

MH DIMENSIONS

		MH DIA. IN FT.			
DIMENSIONS		5'0"	6'0"		
	A	60"	72"		
	B	84"	98"		
	C	6"	7"		
	D	8" min.	8" min.		

NOTES:

1. Concrete to be Class A-4.
2. Pipe connections to conform to Note 7, Plate 3-10.
3. All reinforcing steel to meet current requirements of ASTM Spec. A-615.
4. Manufacturer's name to be cast in steps or on inside face of cone and is to be clearly visible without entering the structure.
5. Manhole to meet current requirements of ASTM Spec. C-478.
6. Compacted gravel under base sections shall conform to Plate 3-10.
7. Joint configuration may be cast bell-up or spigot-up.
8. Pioneer 301 Mastic or approved equal shall be used in addition to the joint specified. (See Plate 3-10)
9. Slope Bench 1" to 2" per ft. midpoint of pipe.

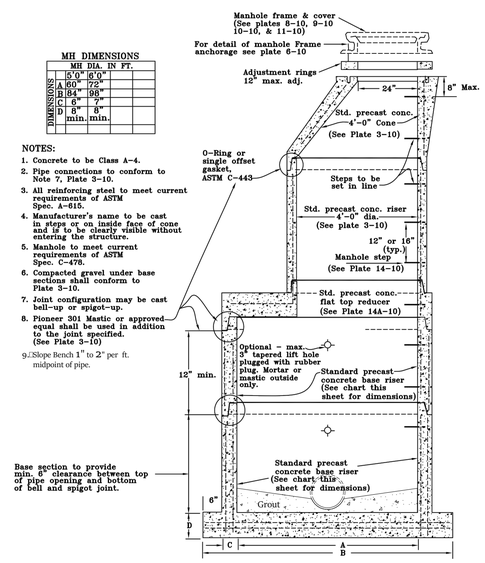

TYPICAL 5'-0' & 6'-0" DIAMETER PRECAST CONCRETE MANHOLE WITH 4'-0" STACK

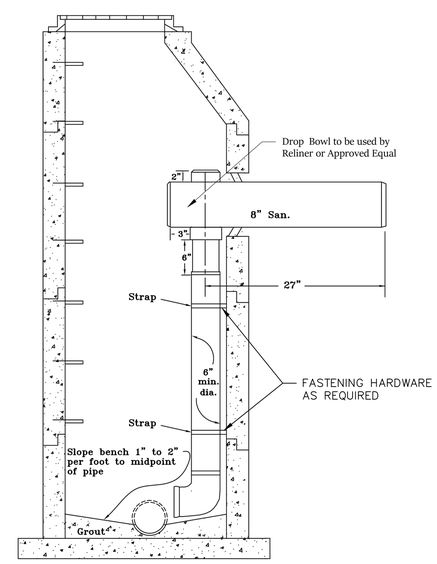

TYPICAL 5'-0" MANHOLE WITH INSIDE DROP CONNECTION

95% NOT FOR CONSTRUCTION

EMERGENCY POLICE - FIRE - RESCUE 911

LITTLE HUNTING CREEK SEWER REPLACEMENT

CIVIL DETAILS 1
CD-1

PROJECT NO. WW-000024-002-A

FAIRFAX COUNTY, VIRGINIA
DEPARTMENT OF PUBLIC WORKS AND ENVIRONMENTAL SERVICES

CAPITAL FACILITIES
WASTEWATER DESIGN & CONSTRUCTION DIVISION
12000 GOVERNMENT CENTER PKWY, SUITE 463
FAIRFAX, VIRGINIA 22035-0052
703-324-5111

REVISIONS △#	DESCRIPTION	BY	APP BY	DATE

APPR BY THE WASTEWATER DESIGN AND CONSTRUCTION DIVISION

DESIGNED BY: M. PACINI
DRAFTED BY: W. LEAK
CHECKED BY: D. HAMILTON

SCALE
VERT. 1"=N/A
HORIZ. 1"=N/A

SHEET 10 OF 18

FEB 2019

User:WLEAK Spec:AUS-NCSMOD File:C:\ACAD\PROJ\2779 - FAIRFAX COUNTY\2017 WW BOA\AR17-06 - LITTLE HUNTING CREEK\SHEETS\CIVIL\CD-1.DWG Scale:1:40 SavedDate:2/7/2019 Time:13:19 Plot Date: Leak, Kenz, 2/7/2019, 13:19 ; Layout:CD-1

CG-6

NOTES:

1. THIS ITEM MAY BE PRECAST OR CAST IN PLACE.
2. CONCRETE TO BE CLASS A3 IF CAST IN PLACE, 4000 PSI IF PRECAST.
3. COMBINATION CURB & GUTTER HAVING A RADIUS OF 300 FEET OR LESS (ALONG FACE OF CURB) SHALL BE PAID FOR AS RADIAL COMBINATION CURB & GUTTER.
4. FOR USE WITH STABILIZED OPEN-GRADED DRAINAGE LAYER, THE BOTTOM OF THE CURB & GUTTER SHALL BE CONSTRUCTED PARALLEL TO THE SLOPE OF SUBBASE COURSES AND TO THE DEPTH OF THE PAVEMENT.
5. ALLOWABLE CRITERIA FOR THE USE OF CG-6 IS BASED ON ROADWAY CLASSIFICATION AND DESIGN SPEED AS SHOWN IN APPENDIX A OF THE ROAD DESIGN MANUAL IN THE SECTION ON GS URBAN STANDARDS.

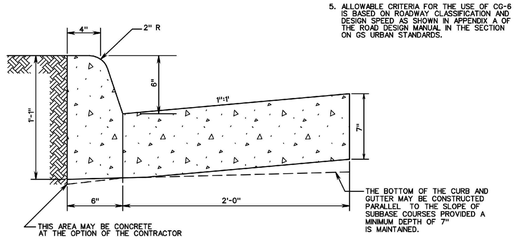

SPECIFICATION REFERENCE		VDOT ROAD AND BRIDGE STANDARDS	
105 502	COMBINATION 6" CURB AND GUTTER VIRGINIA DEPARTMENT OF TRANSPORTATION	REVISION DATE	SHEET 1 OF 1 201.03

PB-1

GENERAL

1. METHOD "A" PIPE BEDDING SHALL BE USED FOR ALL TYPES OF PIPE CULVERTS WITHIN THE APPLICABLE HEIGHT OF COVER RANGE NOTED IN THE STANDARD PC-1 TABLES UNLESS OTHERWISE NOTED ON THE PLANS.
2. H = HEIGHT OF COVER MEASURED FROM TOP OF CULVERT TO FINISHED GRADE.
3. b = EXCAVATION DEPTH AS SHOWN ON PLANS OR TO FIRM BEARING SOIL.

CIRCULAR PIPE

1. D = OUTSIDE DIAMETER OF PIPE.
2. d = INSIDE DIAMETER OF PIPE.
3. X = WIDTH OF CLASS I BACKFILL MATERIAL BEYOND THE EXTREMITY OF THE PIPE.
   X = 12" WHERE d IS LESS THAN 36".
   X = 18" WHERE d IS 36" AND GREATER.
4. WHERE DIRECTED BY THE ENGINEER, BEDDING MATERIAL MAY BE ELIMINATED FOR NORMAL EARTH FOUNDATIONS UNDER ROUTINE ENTRANCE PIPE (EXCEPT PLASTIC PIPE) 30" AND LESS IN DIAMETER WITH HEIGHT OF COVER 15' OR LESS.
5. REGULAR BACKFILL MATERIAL MAY BE USED IN LIEU OF CLASS I BACKFILL MATERIAL FOR ALL FOUNDATION TYPES FOR ROUTINE ENTRANCE PIPE (EXCEPT PLASTIC PIPE) 30" AND LESS IN DIAMETER WITH HEIGHT OF COVER 15' OR LESS.
6. BEDDING MATERIAL AND CLASS I BACKFILL MATERIAL MAY BE ELIMINATED FOR SHOULDER SLOT INLET (DI-13) OUTLET PIPES INSTALLATIONS.

ELLIPTICAL PIPE

1. S_1 = OUTSIDE SPAN DIMENSION OF PIPE.
2. S_2 = INSIDE SPAN DIMENSION OF PIPE.
3. R = OUTSIDE RISE DIMENSION OF PIPE.
4. X = WIDTH OF CLASS I BACKFILL MATERIAL BEYOND THE EXTREMITY OF THE PIPE.
   X = 12" WHERE S_2 IS LESS THAN 36".
   X = 18" WHERE S_2 IS 36" AND GREATER
5. WHERE DIRECTED BY THE ENGINEER, BEDDING MATERIAL MAY BE ELIMINATED FOR NORMAL EARTH FOUNDATIONS UNDER ROUTINE ENTRANCE PIPE WHERE S_2 IS 38" OR LESS AND HEIGHT OF COVER 15' OR LESS.
6. REGULAR BACKFILL MATERIAL MAY BE USED IN LIEU OF CLASS I BACKFILL MATERIAL FOR ALL FOUNDATION TYPES FOR ROUTINE ENTRANCE PIPE WHERE S_2 IS 38" OR LESS AND HEIGHT OF COVER 15' OR LESS.

PIPE ARCH

1. S = SPAN DIMENSION OF PIPE.
2. R = RISE DIMENSION OF PIPE.
3. B = SEE PC-1 TABLE FOR APPLICABLE PIPE MATERIAL
4. x = WIDTH OF CLASS I BACKFILL MATERIAL BEYOND THE EXTREMITY OF THE PIPE.
   x = 12" WHERE S_2 IS LESS THAN 36".
   x = 18" WHERE S_2 IS 36" AND GREATER
5. WHERE DIRECTED BY THE ENGINEER, BEDDING MATERIAL MAY BE ELIMINATED FOR NORMAL EARTH FOUNDATIONS UNDER ROUTINE ENTRANCE PIPE WHERE S_2 IS 35" OR LESS AND HEIGHT OF COVER 15' OR LESS.
6. REGULAR BACKFILL MATERIAL MAY BE USED IN LIEU OF CLASS I BACKFILL MATERIAL FOR ALL FOUNDATION TYPES FOR ROUTINE ENTRANCE PIPE WHERE S IS 25" OR LESS AND HEIGHT OF COVER 15' OR LESS.

SPECIFICATION REFERENCE		VDOT ROAD AND BRIDGE STANDARDS	
302 303	INSTALLATION OF PIPE CULVERTS & STORM SEWERS GENERAL NOTES VIRGINIA DEPARTMENT OF TRANSPORTATION	REVISION DATE	SHEET 1 OF 1 107.00

PB-1

NO PROJECTION OF PIPE ABOVE GROUND LINE

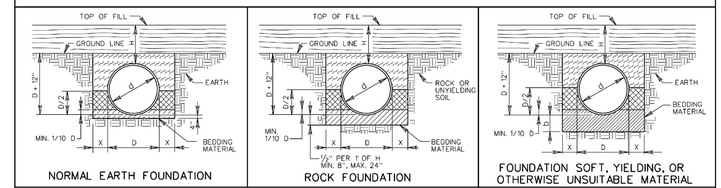

NORMAL EARTH FOUNDATION | ROCK FOUNDATION | FOUNDATION SOFT, YIELDING, OR OTHERWISE UNSUITABLE MATERIAL

PIPE PROJECTION ABOVE GROUND LINE

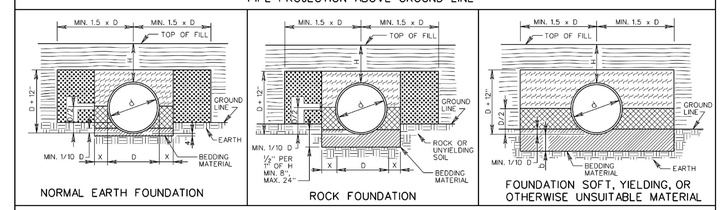

NORMAL EARTH FOUNDATION | ROCK FOUNDATION | FOUNDATION SOFT, YIELDING, OR OTHERWISE UNSUITABLE MATERIAL

- BEDDING MATERIAL IN ACCORDANCE WITH SECTION 302 OF THE ROAD AND BRIDGE SPECIFICATIONS.
- CLASS I BACKFILL MATERIAL IN ACCORDANCE WITH SECTION 302 OF THE ROAD AND BRIDGE SPECIFICATIONS.
- FOR PLASTIC PIPE CLASS I BACKFILL MATERIAL IN ACCORDANCE WITH SECTION 302 OF THE ROAD AND BRIDGE SPECIFICATIONS.
- FOR ALL OTHER PIPE REGULAR BACKFILL MATERIAL IN ACCORDANCE WITH SECTION 302 OF THE ROAD AND BRIDGE SPECIFICATIONS.
- EMBANKMENT
- REGULAR BACKFILL MATERIAL IN ACCORDANCE WITH SECTION 302 OF THE ROAD AND BRIDGE SPECIFICATIONS.

NOTES:

FOR GENERAL NOTES ON PIPE BEDDING, SEE INSTALLATION OF PIPE CULVERTS AND STORM SEWERS GENERAL NOTES ON SHEET 107.00.

CRUSHED GLASS CONFORMING TO THE SIZE REQUIREMENTS FOR CRUSHER RUN AGGREGATE SIZE 25 AND 26 MAY BE USED IN PLACE OF CLASS I BACKFILL.

VDOT ROAD AND BRIDGE STANDARDS			
SHEET 1 OF 4	REVISION DATE	INSTALL. OF PIPE CULVERTS AND STORM SEWERS CIRC. PIPE BEDDING AND BACKFILL - METHOD "A" VIRGINIA DEPARTMENT OF TRANSPORTATION	SPECIFICATION REFERENCE
107.01	07/12		302 303

NOTES:

1. UNDERWATER TRENCH TO BE BACKFILLED USING NATIVE EXCAVATED MATERIAL.
2. CARE SHALL BE TAKEN TO PROTECT NEWLY INSTALLED PIPE AND SUPPORT SYSTEM DURING UNDERWATER BACKFILLING OPERATIONS.
3. TRENCH PROTECTION/SHORING SYSTEM DESIGN SHALL BE SUBMITTED TO ENGINEER FOR REVIEW AND APPROVAL.
4. Cb VARIES DEPENDENT UPON CREEK BED ELEVATION.

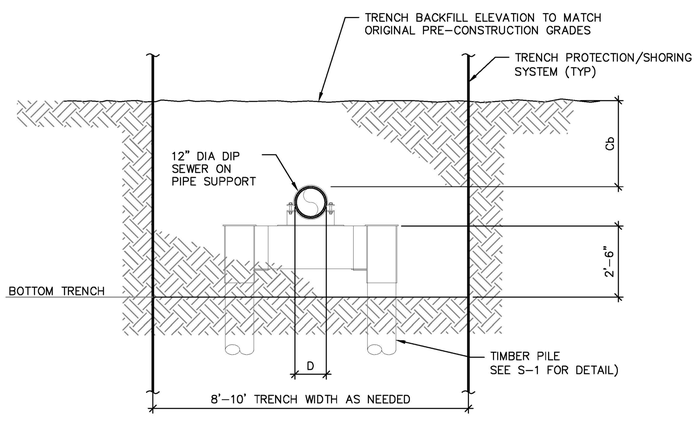

SANITARY SEWER UNDERWATER TRENCH DETAIL

NO SCALE

PFM Guideline 10-103.6

Pipe Size (inch)	Trench Width (inch)
12	42
20	44
24	51

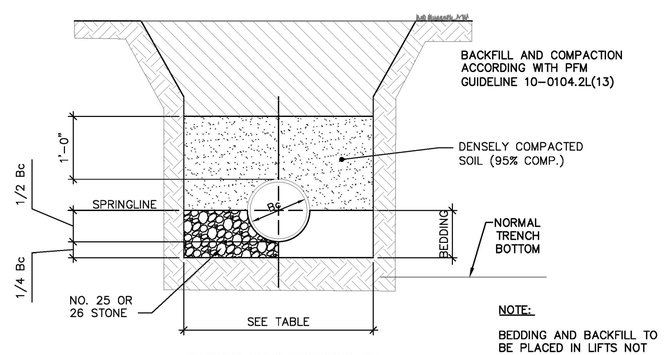

DUCTILE IRON PIPE TRENCH

NOTE:

BEDDING AND BACKFILL TO BE PLACED IN LIFTS NOT EXCEEDING 6" IN THICKNESS

SANITARY SEWER TRENCH NOT UNDER PAVEMENT BEDDING DETAIL

NO SCALE

VDOT Virginia Department of Transportation

LAND USE PERMIT
LUP-OC
Open-Cut Pavement Restoration Requirements

Asphalt Pavement Restoration Detail for Open Cut Utility Installations

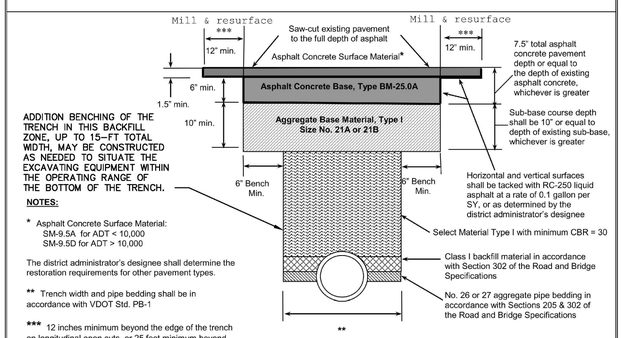

NOTES:

* Asphalt Concrete Surface Material:
SM-9.5A for ADT < 10,000
SM-9.5D for ADT > 10,000

The district administrator's designee shall determine the restoration requirements for other pavement types.

** Trench width and pipe bedding shall be in accordance with VDOT Std. PB-1

*** 12 inches minimum beyond the edge of the trench on longitudinal open cuts, or 25 feet minimum beyond the trench centerline on perpendicular open cuts, or as determined by the district administrator's designee.

Date: August 27, 2014

VDOT-OPEN CUT PAVEMENT RESTORATION REQUIREMENTS

NO SCALE

95% NOT FOR CONSTRUCTION

EMERGENCY POLICE - FIRE - RESCUE 911

LITTLE HUNTING CREEK
SEWER REPLACEMENT
CIVIL DETAILS 2
CD-2

PROJECT NO. WW-000024-002-A

FAIRFAX COUNTY, VIRGINIA
DEPARTMENT OF PUBLIC WORKS
AND ENVIRONMENTAL SERVICES

CAPITAL FACILITIES
WASTEWATER DESIGN & CONSTRUCTION DIVISION
12000 GOVERNMENT CENTER PKWY, SUITE 463
FAIRFAX, VIRGINIA 22035-0052
703-324-5111

REVISIONS				
#	DESCRIPTION	BY	APP BY	DATE
	APPR BY THE WASTEWATER DESIGN AND CONSTRUCTION DIVISION			

DESIGNED BY: M. PACINI
DRAFTED BY: W. LEAK
CHECKED BY: D. HAMILTON

SCALE
VERT. 1"=N/A
HORIZ. 1"=N/A

SHEET 11 OF 18

FEB 2019

User: WLEAK Spec: AUS-NCSMOD File: C:\ACAD\PROJ\2779 - FAIRFAX COUNTY\2017 NW BOA\R17-06 - LITTLE HUNTING CREEK\SHEETS\CIVIL\CD-2.DWG Scale:1:40 SavedDate:2/6/2019 Time:16:52 Plot Date: Leak, Ken: 2/6/2019; 16:52 ; Layout:CD-2

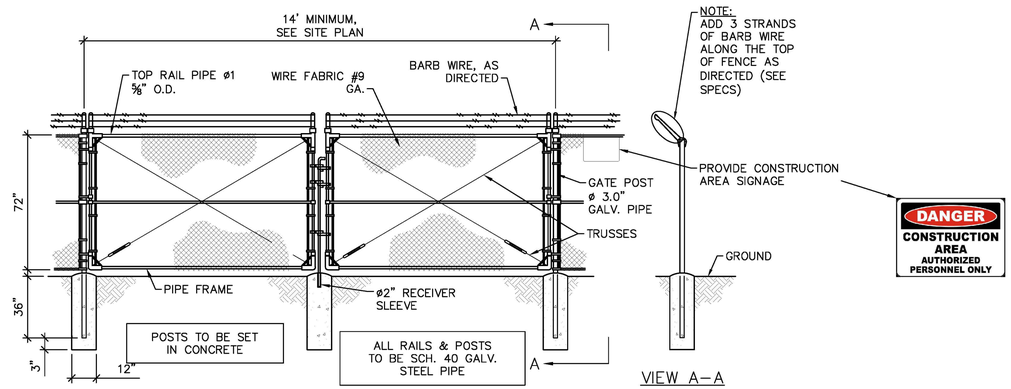

TEMPORARY GATE DETAIL

NO SCALE

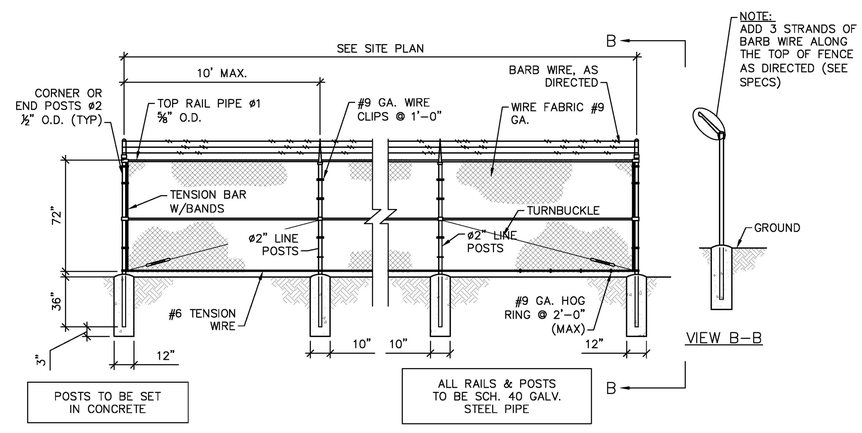

TEMPORARY FENCE DETAIL

NO SCALE

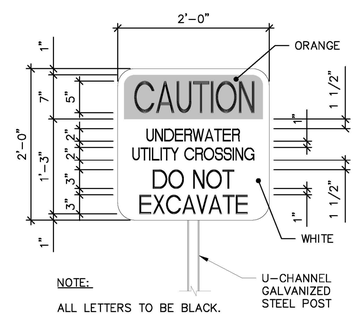

CAUTION UNDERWATER UTILITY CROSSING SIGN DETAIL

NO SCALE

95% NOT FOR CONSTRUCTION

EMERGENCY POLICE – FIRE – RESCUE 911

LITTLE HUNTING CREEK SEWER REPLACEMENT

CIVIL DETAILS 3
CD–3

PROJECT NO. WW–000024–002–A

FAIRFAX COUNTY, VIRGINIA
DEPARTMENT OF PUBLIC WORKS AND ENVIRONMENTAL SERVICES

CAPITAL FACILITIES
WASTEWATER DESIGN & CONSTRUCTION DIVISION
12000 GOVERNMENT CENTER PKWY, SUITE 463
FAIRFAX, VIRGINIA 22035–0052
703–324–5111

REVISIONS				
△#	DESCRIPTION	BY	APP BY	DATE

APPR BY THE WASTEWATER DESIGN AND CONSTRUCTION DIVISION

DESIGNED BY: M. PACINI
DRAFTED BY: W. LEAK
CHECKED BY: D. HAMILTON

SCALE
VERT. 1"= N/A
HORIZ. 1"= N/A

SHEET 12 OF 18

FEB 2019

User: WLEAK Spec: AUS-NCSMOD File: C:\ACAD\PROJ\2779 – FAIRFAX COUNTY\2017 WW BOA\AR17-06 – LITTLE HUNTING CREEK\SHEETS\CIVIL\CD-3.DWG Scale: 1:40 SavedDate: 2/7/2019 Time: 13:21 Plot Date: Leak, Ken: 2/7/2019; 13:21 ; Layout: CD-3

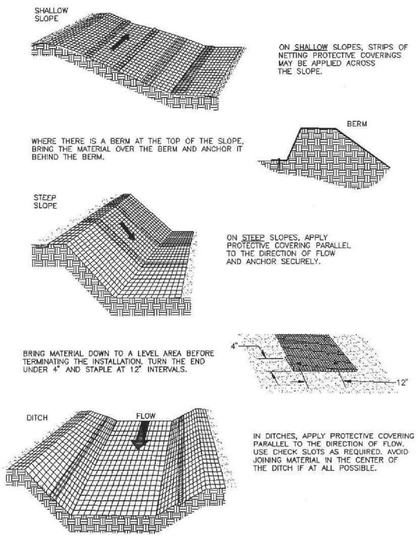

SOIL STABILIZATION BLANKET DETAIL

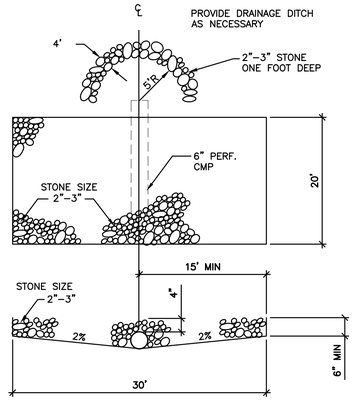

NOTE:

WASH AREA TO BE IN PLACE PRIOR TO CENTRAL CLEARING OF THE SITE. WATER TO BE PROVIDED BY THE CONTRACTOR. (SEE SHEET _ FOR LOCATION)

TEMPORARY VEHICLE WASH AREA

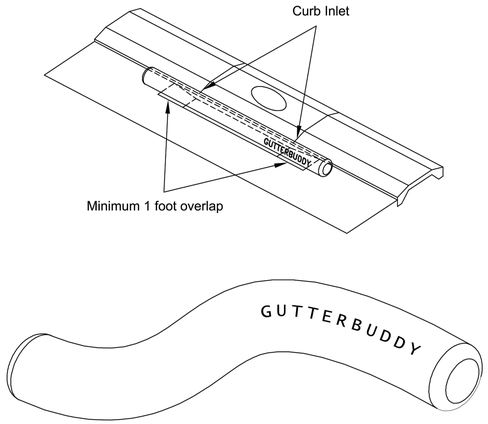

GUTTERBUDDY® Curb Inlet Drain Filters

TEMPORARY GUTTER BUDDY DETAIL

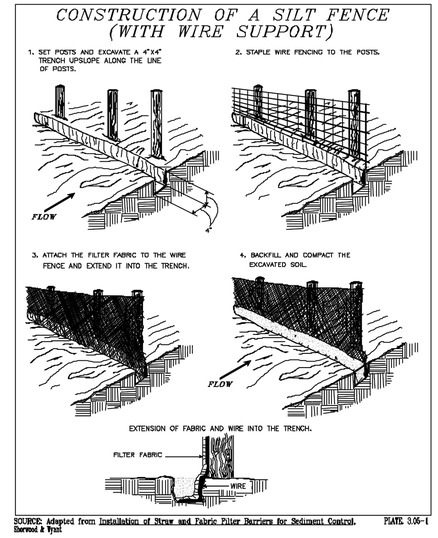

SUPER SILT FENCE

DESCRIPTIONS FOR FAIRFAX COUNTY PRIORITY RATING FORM FOR E&S CONTROL

Revised August 24, 2011

Evaluator – The evaluator is the individual who completes the form.

Denuded Area – Projects that propose denuding more than ten acres will automatically be designated as high priority. Projects that propose up to ten acres of land-disturbing activities shall be rated based on the percentage of the overall site that will be disturbed, as well as the factors described below.

Watercourse Crossing – Sites that have a proposed or existing temporary watercourse crossing shall automatically be designated as high priority.

Distance of a Denuded Area to an Adjacent Downstream Property – Sites with the highest probability of causing damage to an adjacent property due to the proximity of proposed land-disturbing activities shall receive the highest rating.

Distance of a Denuded Area to a Natural Watercourse – Sites with proposed denuded areas that are less than 50-feet from a natural watercourse shall be given the highest rating. Natural watercourses and their associated floodplains are considered environmentally sensitive land areas in accordance with the Chesapeake Bay Preservation Ordinance, Chapter 118 of the *Code of the County of Fairfax, Virginia.*

Vegetative Buffer – A vegetative buffer is defined as an area of natural vegetation to remain undisturbed throughout the construction process. The quantity and quality of the natural vegetation determines the effectiveness of the buffer as a filter between a pollutant source and an adjacent property, watercourse or other natural resource. Land areas designated as Resource Protection Areas on Fairfax County tax maps shall not be considered a part of the vegetative buffer when determining the rating in Paragraph E in an effort to maintain the integrity of these sensitive land areas. Existing vegetative buffers that are 50 feet or greater are considered a benefit at reducing potential damage to downstream properties and waterways, by supplementing the required perimeter E&S controls. Vegetative buffers that are 50 feet or greater are assigned a credit in the form of negative rating values in order to recognize their beneficial effects of controlling sedimentation.

Distance Between the Site Outfall(s) and Any Downstream Wetland, Pond, Parkland or Other Land Deemed Environmentally Sensitive by the Director – Sites where stormwater will outfall less than 2,500-feet from a wet pond, wetland, parkland or other land deemed environmentally sensitive by the Director shall be given the highest rating.

Critical Slope(s) Within 50-Feet of an Adjacent Property – If an on-site slope within 50-feet of an adjacent property meets any of the listed criteria, the project shall be given the highest rating.

Soil Erodibility (Based on Physiographic Setting) – The Soil Erodibility Rating value shall be selected based on the site physiographic setting. The soils in Fairfax County are divided into three major regions based on geology and physiography. The eastern part of the county is underlain by unconsolidated sediments of the Coastal Plain Province. The central part of the county is underlain by crystalline metamorphic and igneous rocks of the Piedmont Province. The western part is underlain by sedimentary and crystalline rocks of the Triassic Basin Province. The three distinct regions are illustrated in the attached map of Physiographic Provinces of Fairfax County, and are also shown on Plate 3-11 of the PFM. Soil Erodibility Rating values of 5, 3, and 1 shall be used for sites located in Triassic Basin, Piedmont Upland, and Coastal Plain provinces, respectively.

Overall Score	Priority Level
23 to 30	High Priority
15 to 22	Medium Priority
Less than 15	Low Priority

95% NOT FOR CONSTRUCTION

FAIRFAX COUNTY PRIORITY RATING FORM FOR EROSION & SEDIMENT CONTROL

PROJECT NAME: LITTLE HUNTING CREEK GRAVITY SEWER PROJECT PROJECT NUMBER: WW-000024-002-A

TAX MAP: 111-1 EVALUATOR: _____ DATE: _____

A. Percentage of Denuded Area to Total Site Area

		Rating
• > 60%	[ ]	5
• 31 to 60%	[ ]	3
• 10 to 30%	[✓]	1

If the denuded area is greater than 10 acres, the project is initially rated a high priority.

B. Watercourse Crossing

		Rating
Yes	[✓]	*
No	[ ]	0

*If yes, project is initially rated a high priority.

C. Distance of Denuded Area to Downstream Adjacent Property

		Rating
• < 50-feet	[✓]	5
• 50 to 150-feet	[ ]	3
• > 150-feet	[ ]	0

D. Distance of Any Portion of the Denuded Area to a Natural Watercourse

		Rating
• < 50-feet	[✓]	5
• 50 to 150-feet	[ ]	3
• > 150- feet	[ ]	0

E. *Minimum Vegetative Buffer (Trees, Shrubs, Grasses and other Plants)

		Rating
• < 50-feet	[✓]	0
• 50 to 150-feet	[ ]	-3
• > 150-feet	[ ]	-5

* Vegetation in Resource Protection Areas are not to be included as vegetative buffers for this application.

F. Distance Between the Site Outfall and any Downstream, Wet Pond, Wetland, Parkland or other Land Deemed Environmentally Sensitive by the Director.

		Rating
• < 2,500-feet	[✓]	5
• 2,500 to 5,000-feet	[ ]	3
• > 5,000-feet	[ ]	0

G. Critical Slopes Within 50-feet of Adjacent Property

- Are there any slopes of 0 to 7%; greater than or equal to 300-feet in length; or,
- Are there any slopes of 7 to 15%; greater than or equal to 150-feet in length; or,
- Are there any slopes greater than 15% and greater than or equal to 75-feet in length

		Rating
If Yes to any of the above	[ ]	5
Not Applicable if critical slope is > 50-feet from adjacent property	[✓]	0

H. Soil Erodibility (Based on Physiographic Setting)

Physiographic Province		Rating
• Triassic Basin	[ ]	5
• Piedmont Upland	[ ]	3
• Coastal Plain	[✓]	1

TOTAL/OVERALL RATING: 17

OVERALL RATING

If > 22
If > 14 and < or = to 22
If < or = to 14

PRIORITY **(Mark with an "X")**

High [✓]
Medium [ ]
Low [ ]

PROJECT PRIORITY LEVEL: HIGH

*** Reserved for Fairfax County use ***

APPROVED BY: _____ *DATE:* _____

Plan Reviewer

EROSION AND SEDIMENT CONTROL NARRATIVE

I. PROJECT DESCRIPTION

THIS SEWER REHABILITATION PROJECT INVOLVES REPLACING APPROXIMATELY 800 LINEAR FEET OF 12-INCH DUCTILE IRON PIPE UNDER LITTLE HUNTING CREEK, APPROXIMATELY 342 LINEAR FEET OF SEWER UNDER STOCKTON PARKWAY, AND APPROXIMATELY 128 LINEAR FEET OF SEWER PIPELINE CONNECTING THE SEWER UNDER LITTLE HUNTING CREEK TO THE SEWER PIPELINE UNDER STOCKTON PARKWAY. THE PROJECT WILL ALSO INCLUDE THE CONSTRUCTION OF NEW MANHOLES ON THE EASTERN AND WESTERN SIDE OF THE CREEK FOR THE NEW SEWER TO CONNECT TO THE EXISTING SEWER SYSTEM. THE EXISTING GRAVITY SEWER WILL REMAIN IN SERVICE UNTIL THE NEW INSTALLATION IS COMPLETE AND THEN WILL BE ABANDONED IN PLACE. THE REHABILITATION IS BEING PERFORMED ON BOTH SIDES OF THE CREEK. THE FIRST LOCATION IS ALONG STOCKTON PARKWAY ON THE EASTERN SIDE OF LITTLE HUNTING CREEK. THE SECOND IS ON THE WESTERN SIDE OF THE CREEK ON A PARCEL OWNED BY THE WOODLAND PARK HOME OWNERS ASSOCIATION. THE REPLACEMENT SEWER WILL HAVE THE SAME DIAMETER AND CAPACITY AS THE ORIGINAL SEWER OF 1.1 MGD.

II. EXISTING SITE CONDITIONS

THE PROJECT AREA IS CHARACTERIZED BY RELATIVELY FLAT TOPOGRAPHY ALONG STOCKTON PARKWAY, BUT STEEP SLOPES IN THE AREA BETWEEN LITTLE HUNTING CREEK AND STOCKTON PARKWAY. PORTIONS OF THE PROJECT ARE LOCATED IN THE WOODED AND LAWN AREA BETWEEN THE STREET AND CREEK. THE PROJECT SITE INCLUDES SOME WETLANDS AND PORTIONS OF THE SITE ARE LOCATED WITHIN THE RPA AND WITH IN THE FLOODPLAIN. SINCE THIS IS A PUBLIC UTILITY PROJECT TO MAINTAIN AN EXISTING SEWER IT IS EXEMPT FROM THE RESTRICTIONS OF THE CHESAPEAKE BAY PRESERVATION ORDINANCE.

III. ADJACENT PROPERTY AND PROJECT ACCESS

THE PROJECT HAS TWO ENTRANCES ONE ON THE WESTERN SIDE OF LITTLE HUNTING CREEK AND THE OTHER ON THE EASTERN SIDE OF LITTLE HUNTING CREEK. BOTH LOCATIONS ARE SITUATED IN A SINGLE FAMILY HOMES RESIDENTIAL AREA. THE WESTERN ENTRANCE IS LOCATED ON WOODLAND LANE ON A PARCEL OWNED BY THE WOODLAND PARK HOA. THE EASTERN SIDE ENTRANCE IS LOCATED ALONG STOCKTON PARKWAY ON PRIVATELY OWN LAND. THERE ARE EXISTING PERMANENT UTILITY EASEMENTS THROUGH PORTIONS OF THE CONSTRUCTION SITE AND TEMPORARY CONSTRUCTION EASEMENTS WILL BE OBTAINED FOR THE REST OF THE CONSTRUCTION AREA.

IV. OFF-SITE AREAS

NO OFF-SITE LAND DISTURBING ACTIVITIES ARE PROPOSED AS PART OF THIS PROJECT. SHOULD THE CONTRACTOR REQUIRED USE OF OFF-SITE PROPERTY, THAT PROPERTY SHALL BE PROPERLY PERMITTED FOR THE TYPE OF IMPACT TAKING PLACE, IN COMPLIANCE WITH LOCAL LAWS AND REGULATIONS. A SIGNED LETTER OF AGREEMENT BETWEEN THE CONTRACTOR AND THE PROPERTY OWNER SHALL BE PROVIDED TO FAIRFAX COUNTY AND THE ENGINEER.

V. CRITICAL AREAS

THIS PROJECT IS LOCATED LARGELY WITHIN THE FLOODPLAIN OF THE LITTLE HUNTING CREEK WITH PORTIONS CROSSING WETLANDS AND THE CREEK. THE DESIGN PRESENTED HEREIN PROPOSES TO AVOID DIRECT IMPACTS TO THE STREAM CHANNEL, WITH ALL IMPACT TO THE STREAM AND WETLAND BEING TEMPORARY. MOST AREAS WILL BE RESTORED TO PRE-EXISTING CONDITIONS WITH APPROPRIATE PLANTINGS EXCEPT THAT TREE REMOVALS WITHIN THE SEWER EASEMENT WILL NOT REPLACED. ADDITIONALLY, PORTION OF THE WETLAND WILL BE CONVERTED FROM PALUSTRINE FORESTED WETLANDS (PFO) TO AN EMERGENT WETLAND.

VI. SOIL

THE SOILS LOCATED WITHIN THE PROJECT AREA ARE ALLUVIAL. REFER TO THE PLAN COVER SHEET FOR A DESCRIPTION OF INDIVIDUAL SOIL CHARACTERISTICS AND PROBLEM CLASS.

VII. EROSION AND SEDIMENT CONTROL MEASURES

ALL SOIL AND EROSION & SEDIMENT CONTROL MEASURES SHALL BE ACCOMPLISHED IN STRICT ACCORDANCE WITH THE STANDARDS AND SPECIFICATION CONTAINED IN THE VIRGINIA EROSION AND SEDIMENT CONTROL HANDBOOK (VESCH) LATEST EDITION AND PUBLIC FACILITIES MANUAL (PFM).

DISTURBANCE SHALL BE MINIMIZED TO THE EXTENT POSSIBLE AND EXTRA CARE SHALL BE TAKEN IN INSTALLING AND MAINTAINING THE SPECIFIED EROSION AND SEDIMENT CONTROLS.

VIII. STRUCTURAL PRACTICES

EC-1 – TEMPORARY VEHICLE WASH AREA
EC-1 – SOIL STABILIZATION BLANKET DETAIL
EC-1 – SUPER SILT FENCE
EC-2 – TURBIDITY CURTAIN
EC-2 – STONE CONSTRUCTION ENTRANCE
EC-2 – PERMANENT RIP-RAP STABILIZATION DETAIL
EC-2 – TREE PRESERVATION AND PROTECTION
EC-2 – SOIL STOCK PILE

IX. VEGETATIVE PRACTICES

EC-2 – CRITICAL ROOT ZONES AND DRIPLINE OF TREES
EC-2 – ROOT PRUNING
EC-2 – TREE PROTECTION FENCE INSTALLATION

X. STORMWATER MANAGEMENT

THERE WILL BE NO PERMANENT CHANGES TO THE CONTOURS OF THE STREAM CHANNEL OR FLOODPLAIN AND NO IMPERVIOUS SURFACES WILL BE ADDED WITH THIS PROJECT.

XI. EROSION AND SEDIMENTATION CONTROL PHASING

TURBIDITY CURTAIN(S) WILL BE INSTALLED AND SHIFTED SUCH THAT ALL DISTURBANCES WITHIN THE WET ARE FULLY ENCAPSULATED WITHIN THE TURBIDITY CURTAINS AT ALL TIMES. IF IT IS REQUIRED, THE COFFERDAM SHALL BE INSTALLED AS SHOWN, AND PER THE NOTES AND DETAILS PROVIDED.

ANY SILT FENCE THAT NEEDS TO BE REMOVED IN ORDER TO COMPLETE PART OF THE CONSTRUCTION SHALL BE ERECTED AT THE END OF EACH WORK DAY.

EMERGENCY POLICE - FIRE - RESCUE 911

LITTLE HUNTING CREEK SEWER REPLACEMENT

EROSION CONTROL DETAILS 1
EC-1

PROJECT NO. WW-000024-002-A

FAIRFAX COUNTY, VIRGINIA
DEPARTMENT OF PUBLIC WORKS AND ENVIRONMENTAL SERVICES

CAPITAL FACILITIES
WASTEWATER DESIGN & CONSTRUCTION DIVISION
12000 GOVERNMENT CENTER PKWY, SUITE 463
FAIRFAX, VIRGINIA 22035-0052
703-324-5111

△#	DESCRIPTION	BY	APP BY	DATE
REVISIONS				

APPR BY THE WASTEWATER DESIGN AND CONSTRUCTION DIVISION

DESIGNED BY: M. PACINI
DRAFTED BY: W. LEAK
CHECKED BY: D. HAMILTON

SCALE
VERT. 1"=N/A
HORIZ. 1"=N/A

SHEET 13 OF 18

FEB 2019

User:WLEAK Spec:AUS-NCSMOD File:C:\ACAD\PROJ\2779 - FAIRFAX COUNTY\2017 WW BOA\AR17-06 - LITTLE HUNTING CREEK\SHEETS\CIVIL\EC-1-2.DWG Scale:1:40 SavedDate:2/7/2019 Time:14:18 Plot Date: Leak, Ken; 2/7/2019; 14:18 ; Layout:EC-1

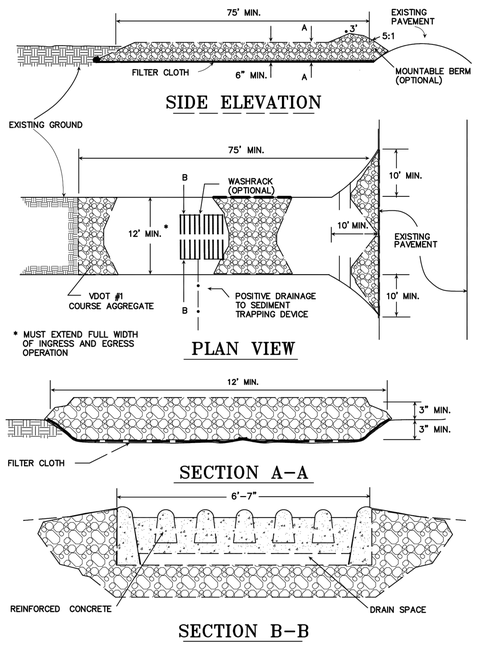

STONE CONSTRUCTION ENTRANCE

NO SCALE

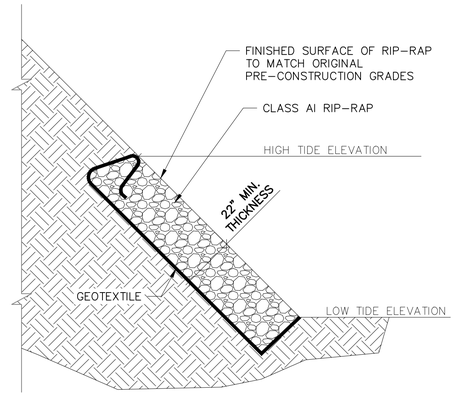

PERMANENT RIP-RAP STABILIZATION DETAIL

NO SCALE

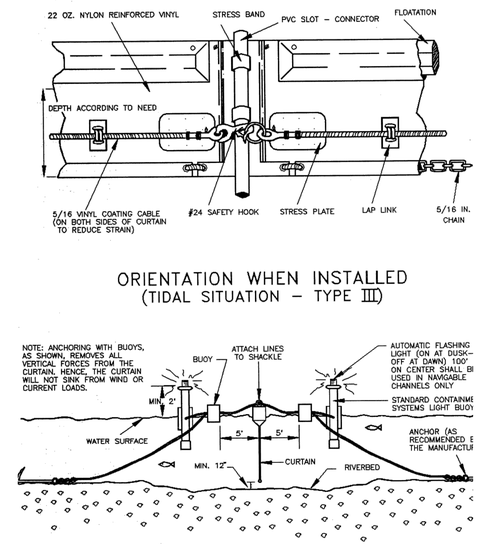

TURBIDITY CURTAIN - TYP III

NO SCALE

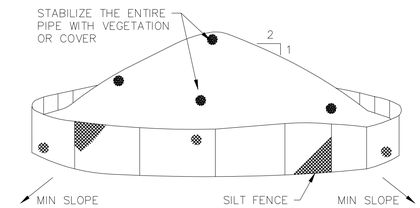

NOTES:

1. AREA CHOSEN FOR STOCKPILING OPERATIONS SHALL BE DRY AND STABLE.
2. MAXIMUM SLOPE OF STOCKPILE SHALL BE 1:2.
3. UPON COMPLETION OF SOIL STOCKPILING, EACH PILE SHALL BE SURROUNDED BY EITHER SILT FENCE OR STRAW BALES, THEN STABILIZED WITH EITHER VEGETATION OR COVERED.
4. SEE DETAIL FOR INSTALLATION OF SILT FENCE.
5. ALL EXISTING MATERIAL THAT IS NOT TO BE REUSED IN THE WORK SHALL BE REMOVED FROM THE SITE AND PROPERLY DISPOSED.
6. RESTORE STOCK PILE SITES TO THE PRE-EXISTING PROJECT CONDITION AND RESEED AS NEEDED.

SOIL STOCKPILE DETAIL

NO SCALE

TREE PROTECTION ZONE
KEEP OUT
OFF LIMITS TO CONSTRUCTION EQUIPMENT, MATERIALS, AND WORKERS
CALL 703-324-7470 TO REPORT VIOLATIONS
PENALTY FOR VIOLATIONS STRICTLY ENFORCED
PROHIBIDO ENTRAR
ZONA DE PROTECTION DEL ARBOL
LLAMAR AL TEL. 703-324-7470
PARA REPORTAR INFRACCIONES

SPECIFICATIONS

- MINIMUM DIMENSION: 11 X 8 INCHES (W X H)
- BACKGROUND COLOR: RED OR YELLOW
- MINIMUM LETTER SIZE: LARGE = 0.48 INCHES
  SMALL = 0.28 INCHES
- SIGNS MADE OF WEATHERPROOF MATERIAL

TREE PRESERVATION SIGN NOTE:

WEATHERPROOF TREE PRESERVATION AREA SIGNS SHALL BE POSTED ON TREE PROTECTION FENCING. PER PFM 12-0703.3, THE PERMITTEE SHALL POST AND MAINTAIN BILINGUAL SIGNS AT THE LIMITS OF CLEARING AT A MINIMUM OF 50 FOOT INTERVALS. SIGNS SHALL BE POSTED IN ENGLISH AND SPANISH.

TREE PROTECTION ZONE SIGN

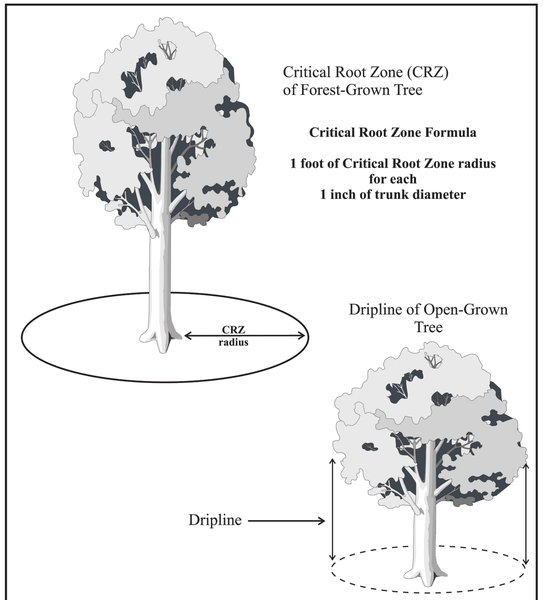

Ref. Sec. 12-0307.2D, 12-0307.2E Rev. 2-02, 2011 Reprint, 2018 Reprint	CRITICAL ROOT ZONES AND DRIPLINES OF TREES	PLATE NO	STD NO
		2-12	

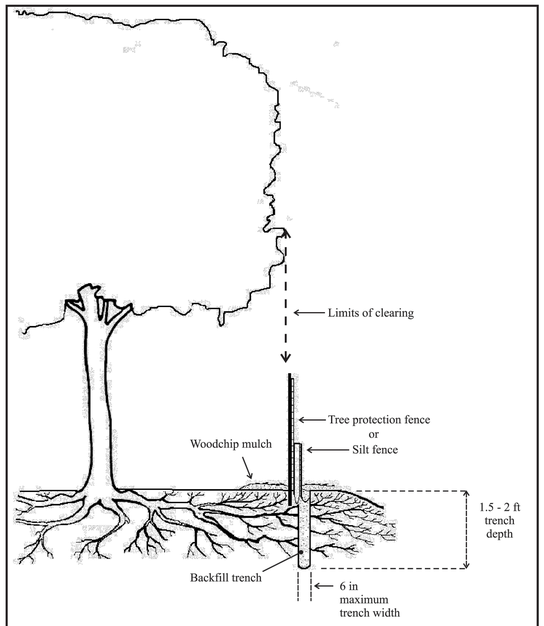

Ref. Sec. 12-0502.1, 12-0504.20 Rev. 2-02, 2011 Reprint, 2018 Reprint	ROOT PRUNING	PLATE NO.	STD. NO.
		7-12	

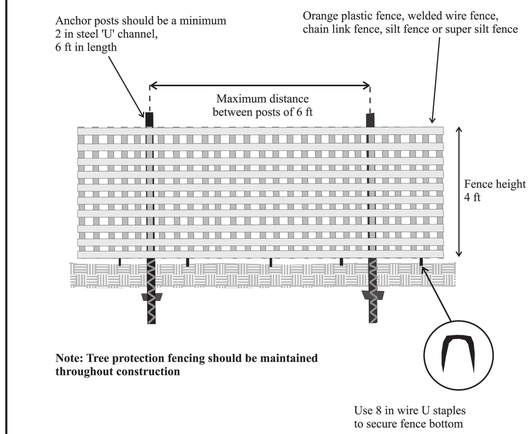

Adapted from: ***Woodland Conservation Manual***, Prince George County, Maryland

Ref. Sec. 12-0703.1B, 12-0505.1B Rev. 2-02, 2011 Reprint	TREE PROTECTION FENCE INSTALLATION	PLATE NO.	STD. NO.
		6-12	

95% NOT FOR CONSTRUCTION

EMERGENCY POLICE - FIRE - RESCUE 911

LITTLE HUNTING CREEK SEWER REPLACEMENT

EROSION CONTROL DETAILS 2
EC-2

PROJECT NO. WW-000024-002-A

FAIRFAX COUNTY, VIRGINIA
DEPARTMENT OF PUBLIC WORKS AND ENVIRONMENTAL SERVICES

CAPITAL FACILITIES
WASTEWATER DESIGN & CONSTRUCTION DIVISION
12000 GOVERNMENT CENTER PKWY, SUITE 463
FAIRFAX, VIRGINIA 22035-0052
703-324-5111

#	DESCRIPTION	BY	APP BY	DATE

REVISIONS

APPR BY THE WASTEWATER DESIGN AND CONSTRUCTION DIVISION

DESIGNED BY: M. PACINI
DRAFTED BY: W. LEAK
CHECKED BY: D. HAMILTON

SCALE
VERT. 1"=N/A
HORIZ. 1"=N/A

SHEET 14 OF 18

FEB 2019

User: WLEAK Spec: AUS-NCSMOD File: C:\ACAD\PROJ\2779 - FAIRFAX COUNTY\2017 WW BOA\AR17-06 - LITTLE HUNTING CREEK\SHEETS\CIVIL\EC-1-2.DWG Scale: 1:40 SavedDate: 2/1/2019 Time: 15:10 Plot Date: Leak, Ken; 2/5/2019; 08:48 ; Layout: EC-2

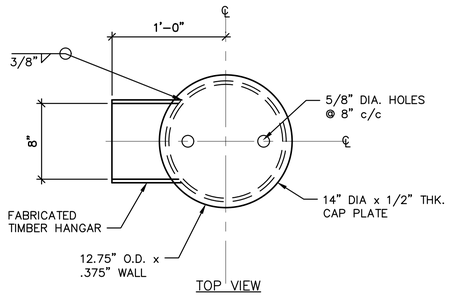

TOP VIEW

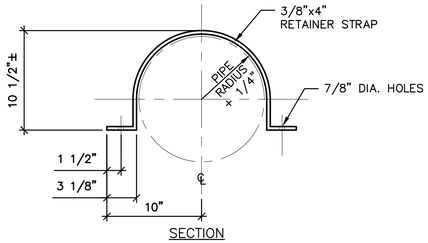

SECTION

SEWER PIPE RETAINER STRAP DETAIL

1 1/2" = 1'-0"

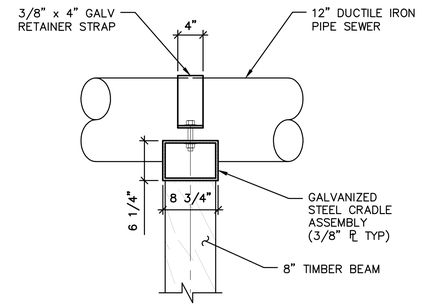

X S1 SECTION

1" = 1'-0"

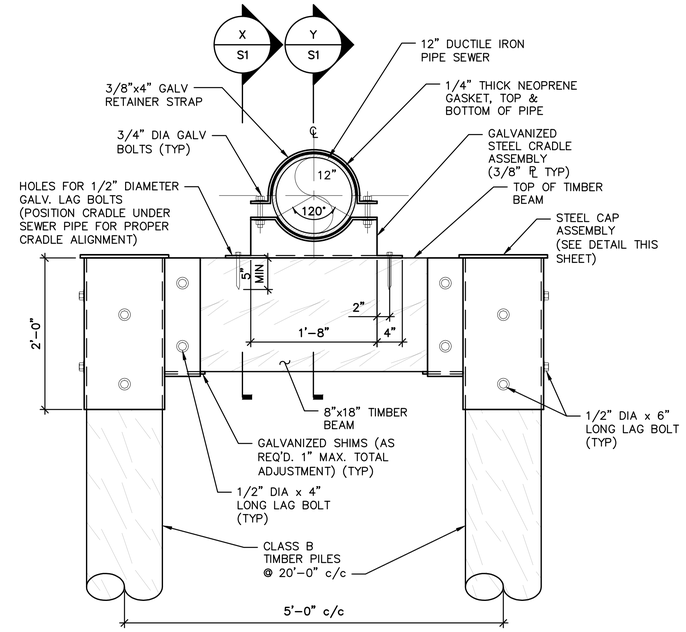

TIMBER PILE PIPE SUPPORT DETAIL

1" = 1'-0"

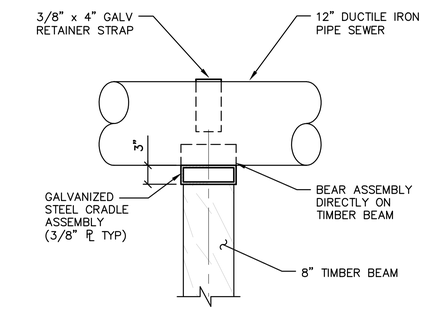

Y S1 SECTION

1" = 1'-0"

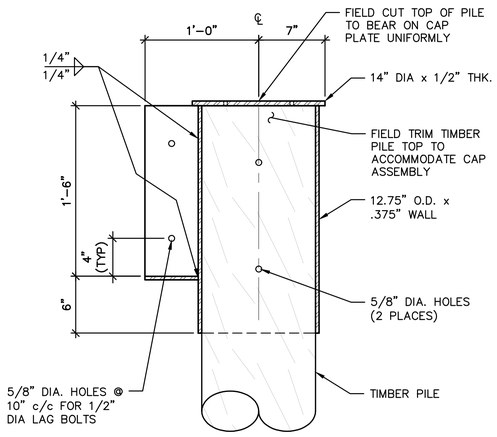

SECTION

TIMBER PILE CAP PLATE ASSEMBLY DETAIL

1 1/2" = 1'-0"

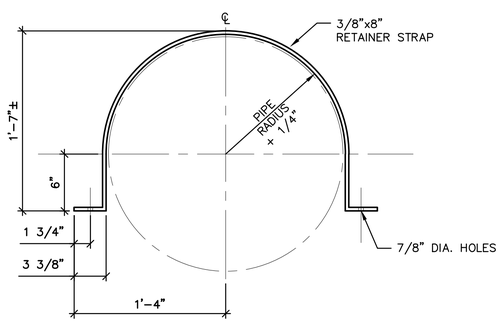

SECTION

ENCASEMENT PIPE RETAINER STRAP DETAIL

1 1/2" = 1'-0"

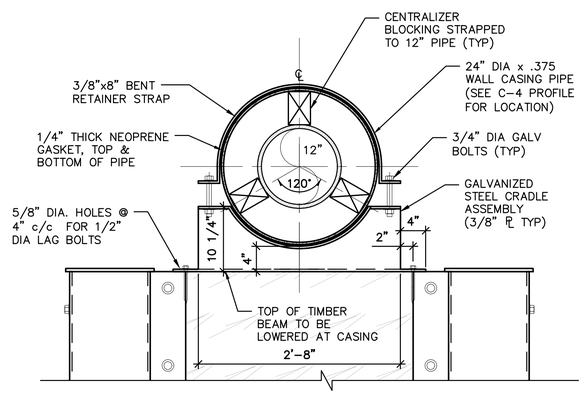

END SECTION

CARRIER PIPE SLOPE TO BE MAINTAINED

ENCASEMENT PIPE DETAIL

1" = 1'-0"

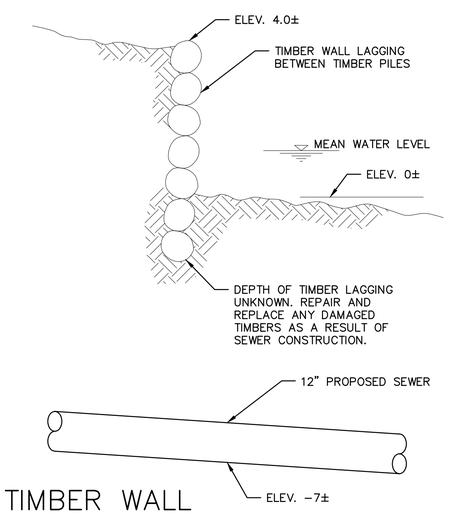

TIMBER WALL LAGGING REPAIR DETAIL

NO SCALE

95% NOT FOR CONSTRUCTION

EMERGENCY POLICE - FIRE - RESCUE 911

LITTLE HUNTING CREEK SEWER REPLACEMENT

STRUCTURAL DETAILS - S-1

PROJECT NO. WW-000024-002-A

FAIRFAX COUNTY, VIRGINIA
DEPARTMENT OF PUBLIC WORKS AND ENVIRONMENTAL SERVICES

CAPITAL FACILITIES
WASTEWATER DESIGN & CONSTRUCTION DIVISION
12000 GOVERNMENT CENTER PKWY, SUITE 463
FAIRFAX, VIRGINIA 22035-0052
703-324-5111

REVISIONS		DESCRIPTION	BY	APP BY	DATE

APPR BY THE WASTEWATER DESIGN AND CONSTRUCTION DIVISION

DESIGNED BY: R.KOLODZAIKE
DRAFTED BY: W.LEAK
CHECKED BY: D.HAMILTON

SCALE
VERT. 1"=NONE
HORIZ. 1"= 40'

SHEET 15 OF 18

FEB 2019

User: WLEAK Spec: AIS-NCSMOD File: C:\ACAD\PROJ\2779 - FAIRFAX COUNTY\2017 WW BOA\AR17-06 - LITTLE HUNTING CREEK\SHEETS\STRUCTS-1.DWG Scale:1:1 SavedDate:2/7/2019 Time:13:31 Plot Date: Leak, Kent, 2/7/2019, 13:32 , Layout:S-1

TEMPORARY TRAFFIC CONTROL PLAN

GENERAL NOTES:

1. TMP/SOC TYPE A PROJECT INFORMATION:

   A. IDENTIFY THE PROJECT'S TMP TYPE:
   THIS PROJECT'S TMP/SOC PLAN HAS BEEN DESIGNED IN CONFORMANCE WITH A TYPE A TMP/SOC PLAN.

   B. IDENTIFY THE WORK ZONE LOCATION, LENGTH, AND WIDTHS. THE PROJECT LOCATION IS AS SHOWN ON SHEET 1. THE WORK ZONE AREAS HAVE BEEN DELINEATED AS SHOWN ON THE TMP/SOC PLAN SHEETS 16 AND 17. THE WORK ZONE LENGTHS AND WIDTHS VARY BY LOCATION AS SHOWN ON THE TMP/SOC PLAN SHEETS 16 AND 17.

   C. NOTE THE HOURS THE CONSTRUCTION AREA WILL BE ACTIVE:
   CONSTRUCTION AREA SHALL BE CONSIDERED ACTIVE WHEN ANY IMPACT TO TRAFFIC OCCURS. (1ST CONE IN ROAD) CONSTRUCTION AREA HOURS HAVE THE FOLLOWING LIMITATIONS:

   NO LANE CLOSURES WILL BE ALLOWED FROM NOON ON THE DAY BEFORE A HOLIDAY UNTIL NOON ON THE WORKDAY FOLLOWING THE HOLIDAY. HOLIDAYS INCLUDE ALL STATE AND FEDERAL HOLIDAYS.

   D. THE TMP/SOC PLAN, DURING CONSTRUCTION, SHALL BE IN ACCORDANCE WITH SECTIONS 512, 701, 703, AND 704 OF THE VIRGINIA DEPARTMENT OF TRANSPORTATION ROAD AND BRIDGE SPECIFICATIONS DATED 2007; THE VIRGINIA WORK AREA PROTECTION MANUAL DATED AUGUST 2011; THE MANUAL OF UNIFORM TRAFFIC CONTROL DEVICES (MUTCD) DATED 2009; THE VIRGINIA SUPPLEMENT TO THE MANUAL ON UNIFORM TRAFFIC CONTROL DEVICES DATED 2015; AND THE LLM-LD-241.5 OF THE INSTRUCTIONAL AND INFORMATIONAL MEMORANDA.

   E. NOTE ANY EXISTING ENTRANCES, EXISTING INTERSECTIONS, OR EXISTING PEDESTRIAN ACCESS POINTS THAT WILL BE AFFECTED BY THE CONSTRUCTION AREA OR BY THE TRAFFIC CONTROL DEVICES:

   EXISTING ENTRANCES:
   THERE IS A DRIVE TO THE LHC PUMP STATION AND MINIMAL PRIVATE ENTRANCES WITHIN THE WORK ZONES. ACCESS TO THE ENTRANCES WILL BE MAINTAINED AT ALL TIMES.

   EXISTING INTERSECTIONS:
   THERE ARE NO INTERSECTIONS WITHIN THE WORK ZONES. THERE IS AN INTERSECTION OR CONNECTION ON EITHER END OF THE PROJECT.

   EXISTING PEDESTRIAN ACCESS POINTS:
   NO PEDESTRIAN ACCESS PATHS OR POINTS ARE LOCATED WITHIN THE WORK ZONE.

   EXISTING BUS STOPS:
   THERE ARE NO BUS STOPS IN OR ADJACENT TO THE WORK ZONES.

   F. IDENTIFY THE MAJOR TYPES OF TRAVELERS:
   THE TRAFFIC ON THE ROADWAY CONSISTS PRIMARILY OF PASSENGER VEHICLES. THE SURROUNDING AREAS ARE RESIDENTIAL.

   G. THE CONTRACTOR SHALL DESIGNATE A PERSON ASSIGNED TO THE PROJECT WHO WILL HAVE THE PRIMARY RESPONSIBILITY, WITH SUFFICIENT AUTHORITY, FOR IMPLEMENTING THE TMP/SOC AND OTHER SAFETY AND MOBILITY ASPECTS OF THE PERMIT WORK. THIS PERSON SHALL COORDINATE WITH THE FAIRFAX COUNTY CONSTRUCTION INSPECTOR FOR THE DURATION OF CONSTRUCTION.

   THE CONTRACTOR SHALL ENSURE THAT PERSONNEL ASSIGNED TO THE PROJECT ARE TRAINED IN TRAFFIC CONTROL TO A LEVEL COMMENSURATE WITH THEIR RESPONSIBILITIES IN ACCORDANCE WITH VDOT'S WORK ZONE TRAFFIC CONTROL TRAINING GUIDELINES.

   THE CONTRACTOR SHALL INFORM THE ENGINEER OF ANY WORK REQUIRING LANE SHIFTS, LANE CLOSURES, AND/OR PHASE CHANGES A MINIMUM OF TWO WEEKS PRIOR TO IMPLEMENTING THIS ACTIVITY.

   THE CONTRACTOR SHALL PERFORM REVIEWS OF THE CONSTRUCTION AREA TO ENSURE COMPLIANCE WITH CONTRACT DOCUMENTS AT REGULARLY SCHEDULED INTERVALS AT THE DIRECTION OF THE ENGINEER. CONTRACTOR SHALL MAINTAIN AN APPROVED COPY OF THE TEMPORARY TRAFFIC CONTROL PLAN AT THE WORK SITE AT ALL TIMES.

   THE CONTRACTOR SHALL COORDINATE WITH LOCAL POLICE DEPARTMENT AND LOCAL FIRE/RESCUE DEPARTMENT FOR ANY LANE CLOSURES AND ANY DETOURS OF ANY NATURE.

   THE CONTRACTOR SHALL SCHEDULE ALL PHASES OF CONSTRUCTION IN SUCH A MANNER THAT WATER, SANITARY SEWER, CABLE, FIBER CABLE/OPTIC CABLE, ANY OVERHANGING UTILITIES, AND ANY UNDERGROUND UTILITIES SERVICES WILL NOT BE INTERRUPTED BEYOND AS STATED IN THE PLANS.

2. THIS TMP/ SOC PLAN IS INTENDED AS A GUIDE. IT IS NOT TO ENUMERATE EVERY DETAIL WHICH MUST BE CONSIDERED IN THE CONSTRUCTION OF EACH PHASE, BUT ONLY TO SHOW THE GENERAL HANDLING OF EXISTING TRAFFIC. IF THE CONTRACTOR IS TO DEVIATE FROM THE APPROVED TMP, A NEW OR REVISED TMP MUST BE SUBMITTED TO THE ENGINEER FOR REVIEW AND APPROVAL.

3. THE CONTRACTOR SHALL CLOSE NO MORE THAN ONE LANE OF TRAFFIC ON STOCKTON PARKWAY DURING CONSTRUCTION OF THIS PROJECT TO MAINTAIN LOCAL ACCESS WITH A MINIMUM CLEAR ROADWAY WIDTH NO LESS THAN ELEVEN FEET UNLESS OTHERWISE APPROVED BY THE ENGINEER.

4. THE CONTRACTOR SHALL ENSURE POSITIVE DRAINAGE FOR THE DURATION OF THE PROJECT, CONTRACTOR SHALL ADD ANY ADDITIONAL TEMPORARY MEASURES NECESSARY TO FACILITATE PROPER, POSITIVE DRAINAGE FOR THE DURATION OF CONSTRUCTION.

5. UNLESS SPECIFIED ON THE PLANS, ALL EXISTING TURN LANES SHALL BE MAINTAINED AT ALL TIMES FOR THE DURATION OF CONSTRUCTION.

6. WHERE GROUP 2 CHANNELIZING DEVICES ARE USED TO SEPARATE THE CONSTRUCTION AREA AND TRAFFIC, A MINIMUM CLEAR ZONE AREA AS DEFINED IN THE VWAPM IS TO BE MAINTAINED.

7. THE CONTRACTOR IS ONLY AUTHORIZED TO WORK WITHIN THE LIMITS OF CONSTRUCTION AS SHOWN ON THE DRAWINGS. CONTRACTOR SHALL PROVIDE CONFIRMATION THAT ANY OFFSITE STAGING, STOCKPILING, BORROW AND/OR WASTE SITES ARE PROPERLY PERMITTED AND IN COMPLIANCE WITH THE REQUIREMENTS OF THE LOCAL JURISDICTION. CONTRACTOR IS RESPONSIBLE FOR ANY OFFSITE PERMITTING AND PERMISSIONS TO USE PRIVATE PROPERTY.

8. IMPLEMENTING THE TRANSPORTATION MANAGEMENT PLAN:
   DURING THE FIRST DAY OF THE NEW WORK ZONE TRAFFIC PATTERN, THE PROJECT'S MANAGER AND PROJECT'S CONSTRUCTION INSPECTOR SHALL INSPECT THE WORK ZONE TO ENSURE COMPLIANCE WITH THE TMP. ON THE THIRD TO FIFTH DAY OF IMPLEMENTATION OF THE TMP'S NEW WORK ZONE TRAFFIC PATTERN, THE CONSTRUCTION INSPECTOR SHALL CONDUCT AN ON-SITE REVIEW OF THE WORK ZONE'S PERFORMANCE IN COORDINATION WITH VDOT AND RECOMMEND TO THE CONTRACTOR ANY REQUIRED CHANGES TO THE TMP TO ENHANCE THE WORK ZONE'S SAFETY AND MOBILITY. ALL SUCH CHANGES SHALL BE DOCUMENTED. AN ON-SITE REVIEW OF THE PROJECT'S WORK ZONE TRAFFIC CONTROL BY THE COUNTY'S CONSTRUCTION INSPECTOR AND THE CONTRACTOR SHALL BE CONDUCTED (WITH COORDINATION FROM VDOT) WITHIN 48 HOURS OF ANY FATAL INCIDENT/CRASH WITH THE WORK ZONE.

9. EVALUATION OF THE TRANSPORTATION MANAGEMENT PLAN:
   A PERFORMANCE ASSESSMENT OF THE TMP INCLUDING AREA-WIDE IMPACTS ON ADJACENT ROADWAYS SHALL BE PERFORMED BY FAIRFAX COUNTY WITH THE COORDINATION FROM THE ENGINEER DURING CONSTRUCTION. AS CIRCUMSTANCES DICTATE, A REVIEW OF THE OVERALL EFFECTIVENESS OF THE PROJECT'S TMP SHALL BE COMPLETED DURING THE POST CONSTRUCTION MEETING AND INCLUDED WITH THE POST CONSTRUCTION REPORT. A COPY OF THE SPECIFIC INFORMATION ON THE EFFECTIVENESS OF THE TMP WILL BE FORWARDED TO FAIRFAX COUNTY FOR REVIEW. A COPY OF THE THE TMP INTERIM/POST CONSTRUCTION REPORT FORM CAN BE OBTAINED FROM FAIRFAX COUNTY.

10. PUBLIC COMMUNICATIONS PLAN
    THE CONTRACTOR SHALL BE RESPONSIBLE FOR:

    A. NOTIFYING THE PROJECT MANAGER AND CONSTRUCTION INSPECTOR TWO WEEKS IN ADVANCE OF ANY SCHEDULED WORK PLANS AND TRAFFIC DELAYS.

    B. NOTIFYING THE PROJECT MANAGER, CONSTRUCTION INSPECTOR, AND CORRESPONDING ENGINEER OF ANY UNSCHEDULED TRAFFIC DELAYS.

11. TRANSPORTATION OPERATIONS:

    THE CONTRACTOR SHALL BE RESPONSIBLE FOR IMPLEMENTING AND PROVIDING THE FOLLOWING:

    A. NOTIFY THE REGIONAL TRANSPORTATION OPERATIONS CENTER (TCC) 48 HOURS IN ADVANCE IN ORDER TO PLACE LANE CLOSURE INFORMATION ON THE 511 SYSTEM AND VA-TRAFFIC.

    B. POST A LIST OF LOCAL EMERGENCY RESPONSE AGENCIES INSIDE THE PROJECT'S CONSTRUCTION OFFICE/TRAILOR.

    C. IMMEDIATELY REPORT ANY TRAFFIC INCIDENTS THAT MAY OCCUR IN THE WORK ZONE.

    D. NOTIFY THE PROJECT'S CONSTRUCTION INSPECTOR AND CORRESPONDING ENGINEER OF ANY INCIDENTS AND EXPECTED TRAFFIC DELAYS.

    E. WITHIN 24 HOURS OF ANY INCIDENTS WITHIN THE CONSTRUCTION WORK ZONE, A REVIEW OF THE TRAFFIC CONTROLS SHALL BE COMPLETED AND NECESSARY ADJUSTMENTS MADE TO REDUCE THE FREQUENCY AND SEVERITY OF ANY FUTURE INCIDENTS.

SEQUENCE OF CONSTRUCTION

GENERAL PHASING NOTES:

1. VWAPM = VDOT'S CURRENT EDITION OF THE VIRGINIA WORK AREA PROTECTION MANUAL.

2. THE CONTRACTOR SHALL SUBMIT A FINALIZED TEMPORARY TRAFFIC CONTROL PLAN THAT PRESCRIBES THE NECESSARY TRAFFIC CONTROL MEASURES FOR THE WORK TO BE PERFORMED TO BE APPROVED BY THE ENGINEER PRIOR TO THE COMMENCEMENT OF ANY WORK ACTIVITIES.

3. PRIOR TO ANY WORK, THE CONTRACTOR SHALL INSTALL PROJECT LIMIT SIGNAGE IN ACCORDANCE WITH VWAPM TTC-53.0. FOR THE DURATION OF CONSTRUCTION, THE CONTRACTOR SHALL ENSURE THE SIGNAGE REMAINS IN COMPLIANCE IF THE PROJECT LIMITS CHANGE.

4. THE CONTRACTOR SHALL ONLY CLOSE STOCKTON PARKWAY TO THRU TRAFFIC DURING THE INSTALLATION OF THE SEWER AND THE RESTORATION OF THE ROADWAY.

5. THE CONTRACTOR IS TO MAKE ANY NECESSARY ADJUSTMENTS DURING BOTH WORK AND NON-WOK HOURS TO ENSURE THE PROTECTION AND SAFETY OF THE ADJACENT PROPERTY OWNERS, PEDESTRIANS, VEHICULAR TRAFFIC, AND THE GENERAL PUBLIC FROM ANY CONSTRUCTION-RELATED ACTIVITY, CONSTRUCTION EQUIPMENT, AND THE CONSTRUCTION SITE ITSELF.

DETAILED PHASING:

1. THE WORK ON THE STOCKTON PARKWAY WILL BE PERFORMED AS PART OF PHASE 1 OF THIS PROJECT. TRAFFIC CONTROL WILL BE PERFORMED AS FOLLOWS:

   TRAFFIC CONTROL WILL CONSIST OF A FULL ROAD CLOSURE FOLLOWING THE FIGURE TITLED "TEMPORARY ROAD CLOSURE FOR STOCKTON PARKWAY" LOCATED ON SHEET 16 AND FOLLOW FIGURE TTC-34.1. THE WORK TO BE PERFORMED INCLUDES: THE SET UP AND INSTALLATION OF A SANITARY SEWER AS SHOWN ON THE SITE PLAN ON SHEET 7. THE DURATION OF THIS CLOSURE IS EXPECTED TO BE APPROXIMATELY FOUR WEEKS.

   ACCESS TO PRIVATE ENTRANCES WILL BE MAINTAINED AT ALL TIMES IN ACCORDANCE WITH FIGURE 6H-18. DUE TO THE LIMITED SIGHT DISTANCE OF THE LOCATION OF THE WORK ZONE THE INSTALLATION OF THE SANITARY SEWER WILL TAKE PLACE IN TWO PHASES. THESE PHASES ARE SHOWN ON SHEET 17.

   DURING THE RESTORATION OF THE ROADWAY, TRAFFIC SHALL BE MAINTAINED PER FIGURE TTC-14.0.

2. THE WORK ON WOODLAND LANE WILL BE LIMITED TO SHORT DURATION LANE CLOSURES PER FIGURE 6H-18 OF THE MUTCD FOR DELIVERY AND UNLOADING OF MATERIALS.

3. ALL REMAINING WORK WILL BE LOCATED OFF THE ROADWAY.

4. THE CONTRACTOR SHALL REMOVE ALL TRAFFIC CONTROL DEVICES UPON COMPLETION OF THIS PROJECT.

Typical Traffic Control

Moving/Mobile Operations on a Two-Lane Roadway

(Figure TTC-14.0)

NOTES

Standard:

1. **Each vehicle involved in the moving/mobile operation shall be equipped with at least one high-intensity amber rotating, oscillating, or strobe light. Illuminated flashing arrows on the advance warning vehicles and work operations vehicle shall be a Type B (60" x 30") or Type C (96" x 48"). Vehicle hazard warning signals shall not be used instead of rotating lights or strobe lights, but as a supplement.**
2. **Vehicle-mounted signs shall be mounted with the bottom of the sign at a minimum height of 48 inches above the pavement and mounted in a manner such that equipment or supplies do not obscure them. Sign legends shall be covered or turned from view when work is not in progress.**
3. **If using an arrow board on the shadow vehicle, it shall operate in the four corner caution mode.**

Guidance:

4. *Where practical and when needed, the work and shadow vehicles should pull over periodically to allow motor vehicle traffic to pass.*
5. *Whenever adequate stopping sight distance exists to the rear, the shadow vehicle should maintain the minimum distance from the work vehicle and proceed at the same speed. The shadow vehicle should slow down in advance of vertical or horizontal curves that restrict sight distance.*
6. *A truck-mounted attenuator should be used on the shadow vehicle.*

Option:

7. The distance between the work and shadow vehicles may vary according to speed, terrain, paint drying time, and other factors.

Guidance:

8. *If the work and shadow vehicles cannot pull over to allow motor vehicle traffic to pass frequently, a DO NOT PASS (R4-V6) sign should be placed on the rear of the shadow vehicle blocking the lane.*

Option:

9. Signs may be fabricated to permit change of the message in the field to identify the type of moving operation (LINE PAINTING NEXT 5 MILES (W21-V4)). The maximum distance between the sign and protection vehicle is 5 miles.
10. Stationary signing may be eliminated on low volume (less than 500 vehicles per day), low speed (30 mph or less) roadways.
11. The static warning sign and caution mode arrow board may be replaced with a vehicle-mounted CMS with a minimum character height of 10".

Guidance:

12. *When using a CMS to replace the static sign and arrow board, each word message phase should be followed by the Type B arrow board displaying the caution mode.*

Moving/Mobile Operation on a Two-Lane Roadway

(Figure TTC-14.0)

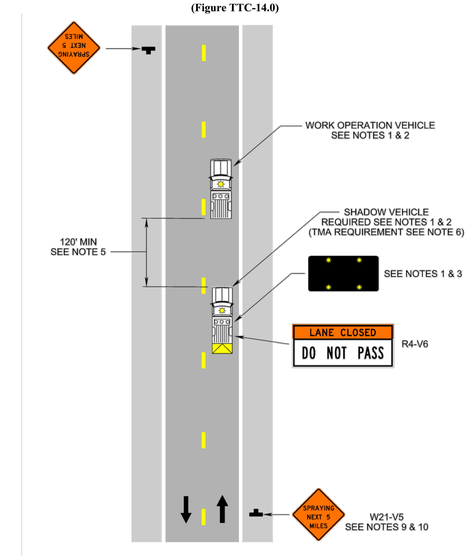

EMERGENCY POLICE - FIRE - RESCUE 911

LITTLE HUNTING CREEK
SEWER REPLACEMENT

TEMPORARY TRAFFIC
CONTROL NOTES - TCP-1

PROJECT NO. WW-000024-002-A

FAIRFAX COUNTY, VIRGINIA
DEPARTMENT OF PUBLIC WORKS
AND ENVIRONMENTAL SERVICES

CAPITAL FACILITIES
WASTEWATER DESIGN &
CONSTRUCTION DIVISION
12000 GOVERNMENT CENTER PKWY, SUITE 463
FAIRFAX, VIRGINIA 22035-0052
703-324-5111

REVISIONS					
#	DESCRIPTION	BY	APP BY	DATE	

APPR BY THE WASTEWATER DESIGN AND CONSTRUCTION DIVISION

DESIGNED BY: D. JOZITY
DRAFTED BY: B. ORR
CHECKED BY: D. HAMILTON

SCALE
VERT. 1"= N/A
HORIZ. 1"= N/A

SHEET
16 OF 18

FEB 2019

Typical Traffic Control
Street Closure Operation with Detour
(Figure TTC-34.1)
NOTES

Guidance:

1. *This plan should be used for streets without posted route numbers.*
2. *On multi-lane streets, Detour signs with an Advance Turn Arrow should be used in advance of a turn.*
3. *Sign spacing distance should be 225'-275' where the posted speed limit is 30 to 35 mph, and 100'-200' where the posted speed is 25 mph or less.*
4. *If the road is opened for a significant distance beyond the intersection and/or there are significant origin/destination points beyond the intersection, the ROAD CLOSED (R11-2) and Detour Arrow (M4-10) signs on Type 3 Barricades should be located at the corners of intersecting closed roadway or the traveled way.*

Option:

5. Flashing warning lights and/or flags may be used to call attention to the advance warning signs.
6. Flashing warning lights may be used on Type 3 Barricades.
7. Detour signs may be located on the far side of intersections. A Detour sign with an advance arrow may be used in advance of a turn.
8. A Street Name (M4-VP1a) plaque may be mounted with the Detour sign. The Street Name plaque may be either white on green or black on orange.

Standard:

9. **When used, the Street Name plaque shall be placed above the Detour sign.**

Support:

10. See Chapter 6I for additional information on incident management traffic control.

Street Closure Operation with Detour
(Figure TTC-34.1)

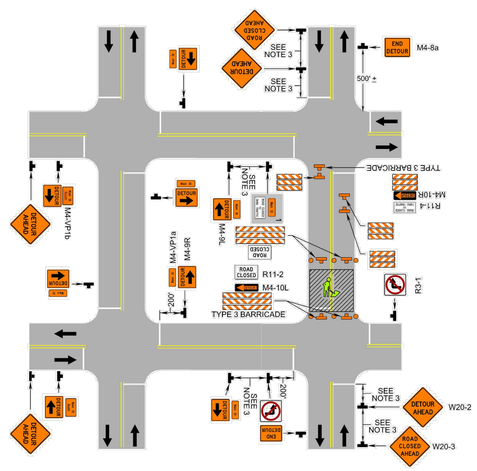

1: Revision 1 – 4/1/2015

Notes for Figure 6H-18—Typical Application 18
Lane Closure on a Minor Street

Standard:

1. **This TTC shall be used only for low-speed facilities having low traffic volumes.**

Option:

2. Where the work space is short, where road users can see the roadway beyond, and where volume is low, vehicular traffic may be self-regulating.

Standard:

3. **Where vehicular traffic cannot effectively self-regulate, one or two flaggers shall be used as illustrated in Figure 6H-10.**

Option:

4. Flashing warning lights and/or flags may be used to call attention to the advance warning signs.
5. A truck-mounted attenuator may be used on the work vehicle and the shadow vehicle.

Figure 6H-18. Lane Closure on a Minor Street (TA-18)

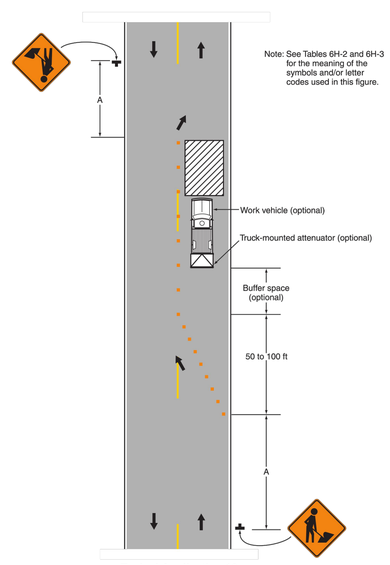

Typical Application 18

TEMPORARY ROAD CLOSURE FOR STOCKTON PARKWAY

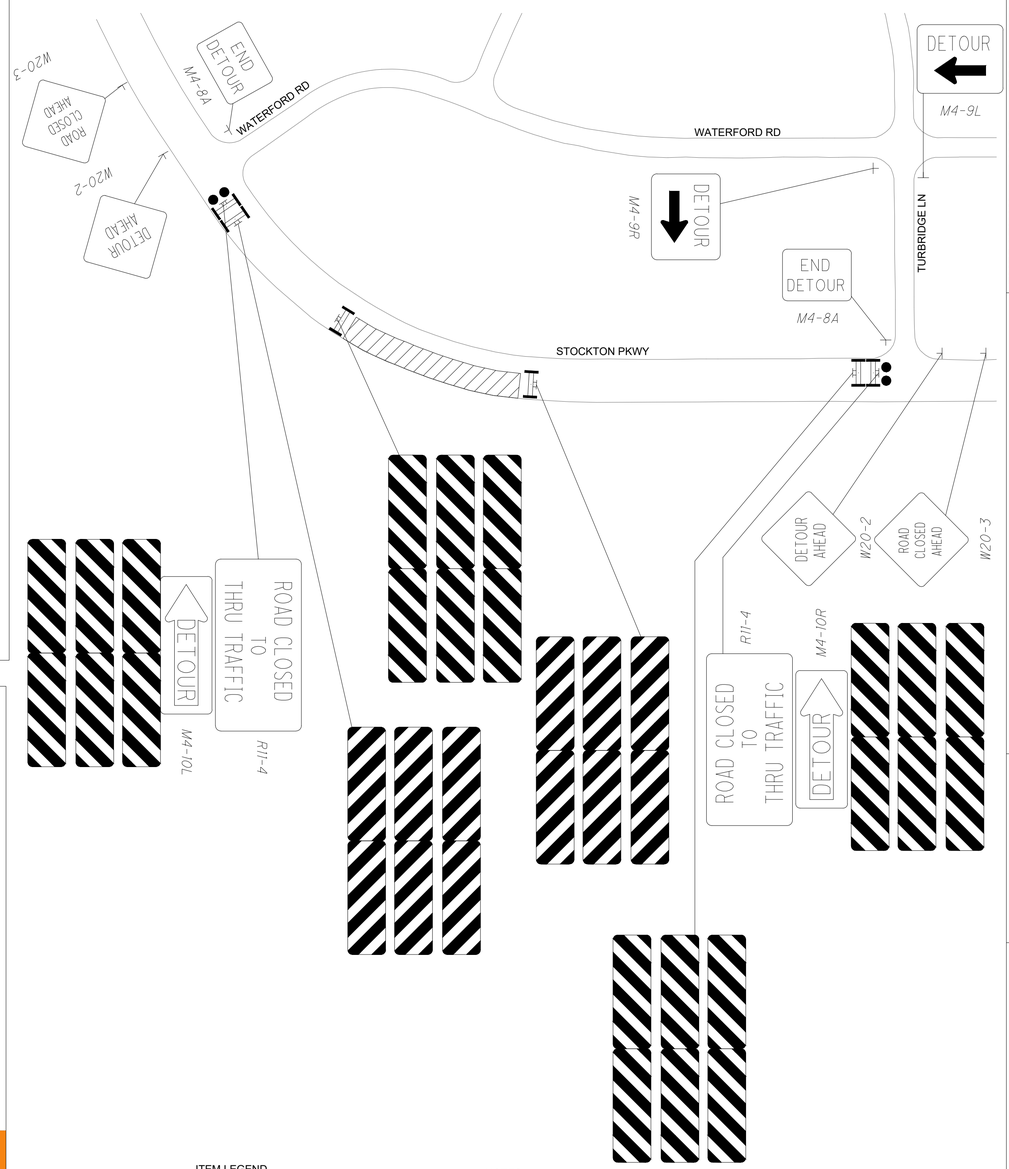

ITEM LEGEND

- WORK AREA
- TEMPORARY SIGN SUPPORT
- TYPE III BARRICADE
- CONES @ 5' C/C

NOTES:

1. THE CLOSURE SHALL ONLY OCCUR DURING ACTIVE WORK ON STOCKTON PKWY. WHENEVER THE CLOSURE OCCURS, THE TOTAL DETOUR SIGNING AS INDICATED ON THIS PLAN SHALL BE IMPLEMENTED.
2. DETOUR SIGNS SHALL BE UNCOVERED AND VISIBLE TO TRAFFIC ONLY WHEN THE STREET CLOSURE IS IN EFFECT.
3. ALL WORK ZONE AND TRAFFIC CONTROL DEVICES AS WELL AS THEIR PLACEMENT SHALL BE IN ACCORDANCE WITH THE MANUAL OF UNIFORM TRAFFIC CONTROL DEVICES (MUTCD) AND APPLICABLE VDOT STANDARDS.
4. SIGN SPACING AND LOCATIONS SHALL BE PER TTC-34.1.
5. SEE SHEET 18 FOR ADDITIONAL SIGNING.

EMERGENCY POLICE - FIRE - RESCUE 911

LITTLE HUNTING CREEK SEWER REPLACEMENT

TEMPORARY TRAFFIC CONTROL STANDARD DETAILS - TCP-2

PROJECT NO. WW-000024-002-A

FAIRFAX COUNTY, VIRGINIA
DEPARTMENT OF PUBLIC WORKS AND ENVIRONMENTAL SERVICES

CAPITAL FACILITIES
WASTEWATER DESIGN & CONSTRUCTION DIVISION
12000 GOVERNMENT CENTER PKWY, SUITE 463
FAIRFAX, VIRGINIA 22035-0052
703-324-5111

REVISIONS	#	DESCRIPTION	BY	APP BY	DATE

APPR BY THE WASTEWATER DESIGN AND CONSTRUCTION DIVISION

DESIGNED BY: D. JOZITY
DRAFTED BY: B. ORR
CHECKED BY: D. HAMILTON

SCALE
VERT. 1"= N/A
HORIZ. 1"= N/A

SHEET 17 OF 18

FEB 2019

PHASE 1

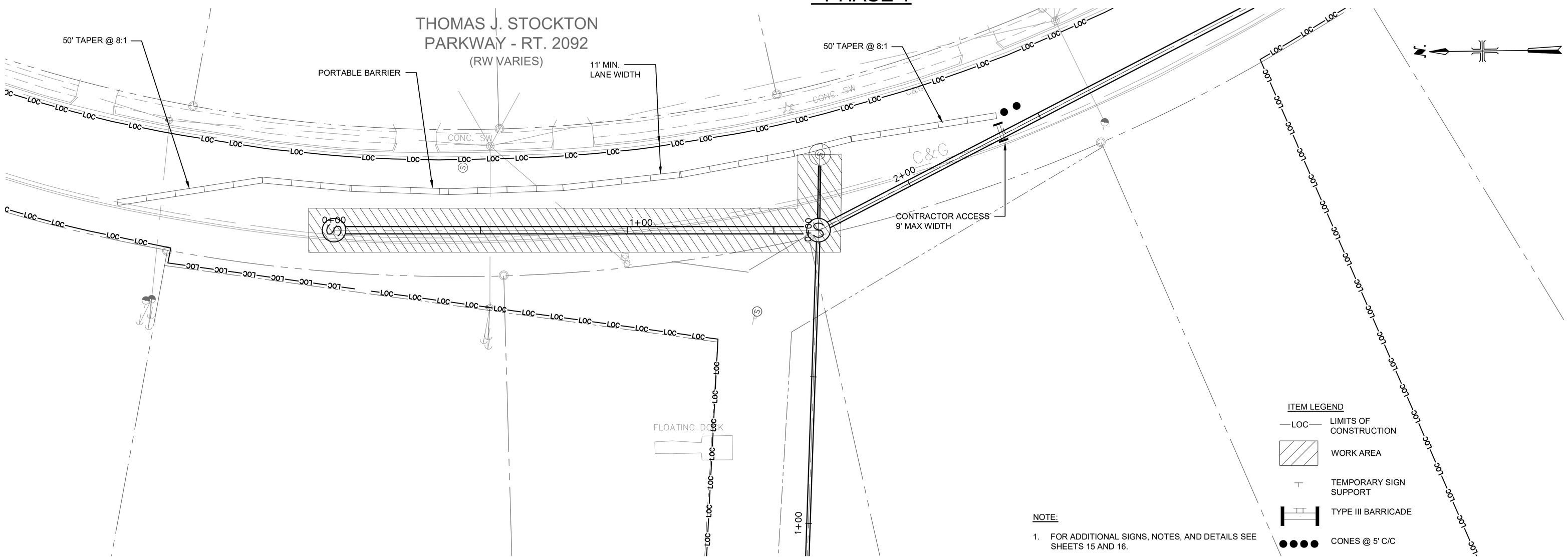

ITEM LEGEND

- LOC — LIMITS OF CONSTRUCTION
- WORK AREA
- TEMPORARY SIGN SUPPORT
- TYPE III BARRICADE
- CONES @ 5' C/C

NOTE:

1. FOR ADDITIONAL SIGNS, NOTES, AND DETAILS SEE SHEETS 15 AND 16.

PHASE 2

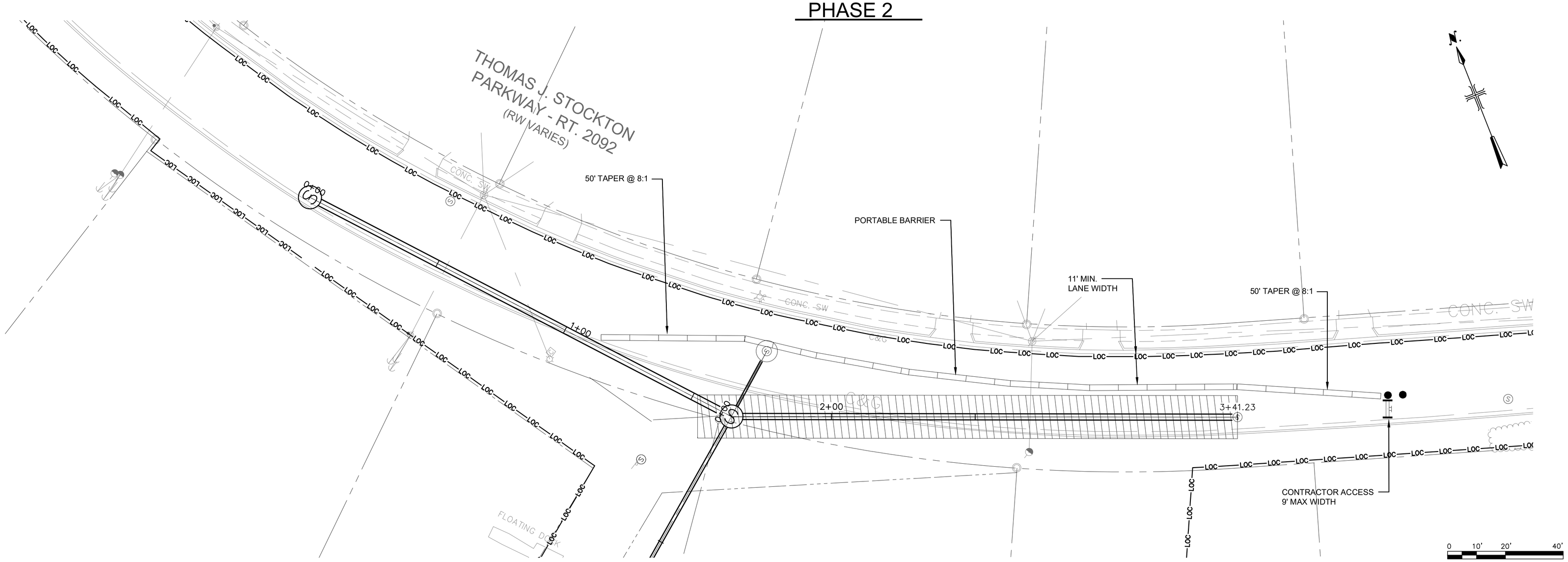

0 10' 20' 40'

EMERGENCY POLICE - FIRE - RESCUE 911

LITTLE HUNTING CREEK SEWER REPLACEMENT

TEMPORARY TRAFFIC CONTROL DETAILS - TCP-3

PROJECT NO. WW-000024-002-A

FAIRFAX COUNTY, VIRGINIA
DEPARTMENT OF PUBLIC WORKS
AND ENVIRONMENTAL SERVICES

CAPITAL FACILITIES
WASTEWATER DESIGN &
CONSTRUCTION DIVISION
12000 GOVERNMENT CENTER PKWY, SUITE 463
FAIRFAX, VIRGINIA 22035-0052
703-324-5111

REVISIONS				
#	DESCRIPTION	BY	APP BY	DATE

APPR BY THE WASTEWATER DESIGN AND CONSTRUCTION DIVISION

DESIGNED BY: D. JOZITY
DRAFTED BY: B. ORR
CHECKED BY: D. HAMILTON

SCALE
VERT. 1"= N/A
HORIZ. 1"= 20'

SHEET
18 OF 18

FEB 2019