INDEX OF SHEETS

SHEET NO:	DESCRIPTION:
1	TITLE SHEET
~~1A-1B~~	~~GENERAL NOTES~~
~~1C~~	~~RIGHT OF WAY DATA SHEET~~
~~1D-1E~~	~~SURVEY ALIGNMENT DATA SHEET~~
~~1F-1G~~	~~CONSTRUCTION ALIGNMENT DATA SHEET~~
~~1H-1J~~	~~TRANSPORTATION MANAGEMENT PLAN~~
~~1K-1M~~	~~SEQUENCE OF CONSTRUCTION/MAINTENANCE OF TRAFFIC PLANS~~
~~2A-2B~~	~~EROSION AND SEDIMENT CONTROL NOTES AND NARRATIVE~~
2C-2D	TYPICAL SECTIONS
~~2E-2G~~	~~CURB RAMP DETAIL SHEETS~~
~~2H~~	~~EXISTING DRAINAGE SCHEDULE~~
~~2J-2K~~	~~INSERTABLE SHEETS~~
3	PLAN & PROFILE (STA. 100+00.00 TO STA. 107+00.00)
3A	EROSION & SEDIMENT CONTROL PLAN
4	PLAN & PROFILE (STA. 107+00.00 TO STA. 114+00.00)
4A	EROSION & SEDIMENT CONTROL PLAN
5	PLAN & PROFILE (STA. 114+00.00 TO STA. 121+00.00)
5A	EROSION & SEDIMENT CONTROL PLAN
6	PLAN & PROFILE (STA. 121+00.00 TO STA. 128+00.00)
6A	EROSION & SEDIMENT CONTROL PLAN
7	PLAN & PROFILE (STA. 128+00.00 TO STA. 135+00.00)
7A	EROSION & SEDIMENT CONTROL PLAN
8	PLAN & PROFILE (STA. 135+00.00 TO STA. 142+00.00)
8A	EROSION & SEDIMENT CONTROL PLAN
9	PLAN & PROFILE (STA. 142+00.00 TO STA. 149+00.00)
9A	EROSION & SEDIMENT CONTROL PLAN
10	PLAN & PROFILE (STA. 149+00.00 TO STA. 156+00.00)
10A	EROSION & SEDIMENT CONTROL PLAN
11	PLAN & PROFILE (STA. 156+00.00 TO STA. 157+07.65)
11A	EROSION & SEDIMENT CONTROL PLAN
~~12A~~	~~SIGNING AND PAVEMENT MARKING GENERAL NOTES~~
~~12B-12K~~	~~SIGNING AND PAVEMENT MARKING PLANS~~
~~12L~~	~~SIGNING AND PAVEMENT MARKING - SIGN SCHEDULE~~
~~13~~	~~BMP DRAINAGE AREA MAP~~
~~13A~~	~~PRE/POST DEVELOPMENT SWM~~
~~13B~~	~~WATER QUALITY NARRATIVE/CALCULATIONS~~
~~13C~~	~~BMP DETAILS~~
~~13D~~	~~BMP CALCULATIONS~~
~~13E~~	~~INDIVIDUAL STRUCTURE LOCATION EXHIBITS~~
~~13F-13K~~	~~STORM DRAINAGE COMPUTATIONS~~
~~13L~~	~~ADEQUATE OUTFALL ANALYSIS~~
~~X1-X20~~	~~CROSS SECTION SHEETS~~

* SHEET 1I, 2I, 12I, AND 13I NOT USED

MAINTENANCE LEGEND:

XXX-VDOT		QQQ-COUNTY	
5,569	LF-SIDEWALK	0	LF-SIDEWALK
0	LF-TRAIL	0	LF-TRAIL
240	SY-CURB RAMPS	0	SY-CURB RAMPS
0	LF-RETAINING WALLS	0	LF RETAINING WALLS

DESIGN FEATURES RELATING TO CONSTRUCTION OR TO REGULATION AND CONTROL OF TRAFFIC MAY BE SUBJECT TO CHANGE AS DEEMED NECESSARY BY THE VIRGINIA DEPARTMENT OF TRANSPORTATION.

THIS PROJECT IS TO BE CONSTRUCTED IN ACCORDANCE WITH VDOT'S:
ROAD AND BRIDGE SPECIFICATIONS, DATED, 2007
ROAD AND BRIDGE STANDARDS, DATED DECEMBER, 2008
MUTCD, DATED 2009
VIRGINIA SUPLEMENT TO THE MUTCD, DATED 2011.
WORK AREA PROTECTION MANUAL, DATED 2011.

AND AS AMENDED BY CONTRACT PROVISIONS AND THE COMPLETE ELECTRONIC PDF VERSION OF THE PLAN ASSEMBLY.

COMMONWEALTH OF VIRGINIA

FAIRFAX COUNTY, VIRGINIA DEPARTMENT OF PUBLIC WORKS AND ENVIRONMENTAL SERVICES

PROJECT NO.1400073-2012
FUND NO._____
CONTRACT NO._____

VDOT PROJECT NO._____
UPC # _____

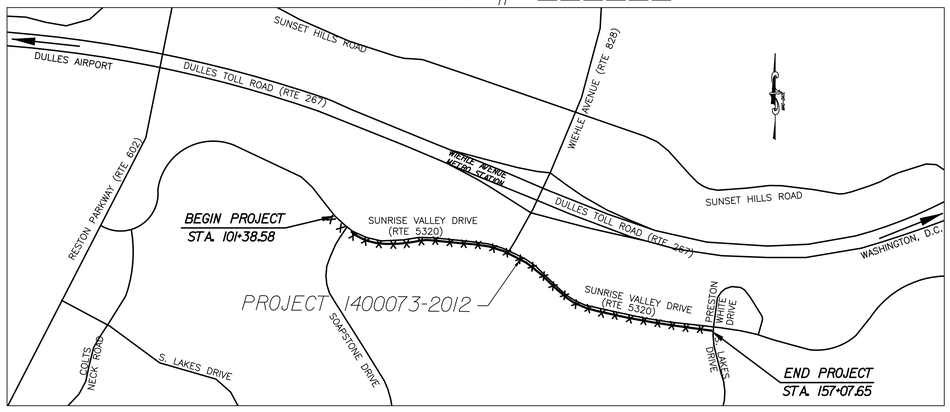

DISTRICT: HUNTER MILL

TAX MAP 17-4, 26-2, 27-1

GRAPHIC SCALE
1000 0 500 1000 2000
(IN FEET)
1 inch = 1000 ft.

SUNRISE VALLEY DRIVE (ROUTE 5320) SIDEWALK - SOUTH SOAPSTONE DRIVE TO SOUTH LAKES DRIVE

STATE PROJECT NO.	SECTION	FEDERAL AID PROJECT NO.	TYPE CODE	UPC NO.	EQUALITIES	LENGTH INCLUDING BRIDGE(S)		LENGTH EXCLUDING BRIDGE(S)		BRIDGE PROJECT NO.	TYPE PROJECT	DESCRIPTION
					FEET	FEET	MILES	FEET	MILES			
						5569.07	1.055	5569.07	1.055		SIDEWALK	FROM: SOAPSTONE DRIVE
												TO: SOUTH LAKES DRIVE

STATE	FEDERAL AID PROJECT	STATE ROUTE	STATE PROJECT	SHEET NO.
VA		5320		1

FUNCTIONAL CLASSIFICATION

SUNRISE VALLEY DRIVE (ROUTE 5320)

FROM: SOAPSTONE DRIVE TO: SOUTH LAKES DRIVE

STREET CLASS	Urban Minor Arterial
AADT (2011)	21,000
AADT (2027)	32,000
DHV	1,100
D (%)	51%
T (%)	1%
DESIGN V (mph)	40
POSTED V (mph)	35

PRE FINAL SUBMISSION
DATE: 10/22/2013

DESIGN WAIVER REQUIRED FOR SUBSTANDARD BUFFER WIDTH AND CLEARZONE WIDTH FOR BMPS

THESE PLANS ARE UNFINISHED AND ARE NOT TO BE USED FOR ANY TYPE OF CONSTRUCTION.

RECOMMENDED FOR APPROVAL FOR RIGHT OF WAY ACQUISITION

DISTRICT PLANNING AND INVESTMENT MANAGER — DATE

DISTRICT PROJECT DEVELOPMENT ENGINEER — DATE

APPROVED FOR RIGHT OF WAY ACQUISITION

DISTRICT ADMINISTRATOR — DATE

RECOMMENDED FOR APPROVAL FOR CONSTRUCTION

DISTRICT PLANNING AND INVESTMENT MANAGER — DATE

DISTRICT PROJECT DEVELOPMENT ENGINEER — DATE

APPROVED FOR CONSTRUCTION

DISTRICT ADMINISTRATOR — DATE

FINAL PLANS AUTHORIZED FOR ROW ACQUISITION

CHIEF, TRANSPORTATION DESIGN DIVISION, DOT — DATE

FINAL PLANS AUTHORIZED FOR CONSTRUCTION PER DPWES/DOT DELEGATION MATRIX

DIRECTOR, UTILITIES DESIGN & CONSTRUCTION DIVISION — DATE

DIRECTOR, DEPARTMENT OF TRANSPORTATION — DATE

DEPUTY DIRECTOR, DEPARTMENT OF PUBLIC WORKS & ENVIRONMENTAL SEVICIES - CAPITAL FACILITIES — DATE

SUNRISE VALLEY DRIVE (ROUTE 5320) SIDEWALK - SOUTH
PROJECT NO 1400073-2012

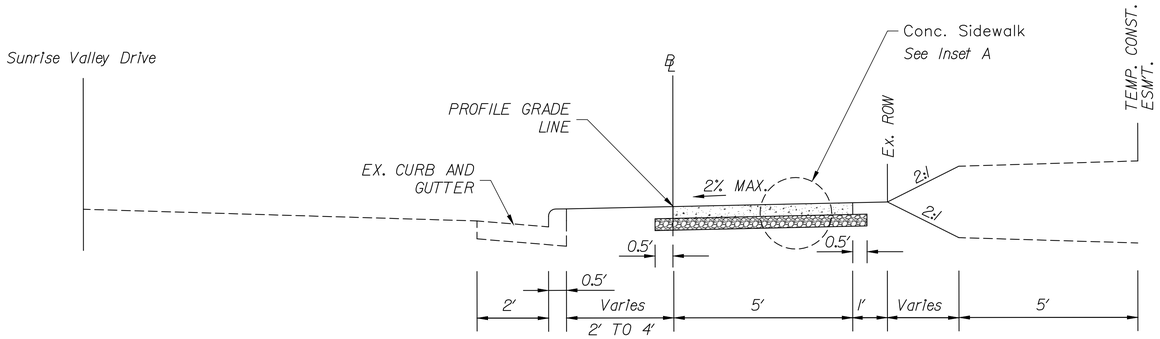

STA. 101+38.58 TO STA. 102+00.00
STA. 103+15.21 TO STA. 105+34.71
STA. 107+05.02 TO STA. 109+21.77
STA. 111+25.00 TO STA. 112+00.85
STA. 112+79.81 TO STA. 113+60.71
STA. 114+35.71 TO STA. 114+78.73
STA. 115+59.56 TO STA. 115+70.13
STA. 115+87.13 TO STA. 116+33.34
STA. 116+41.34 TO STA. 116+80.97
STA. 117+55.97 TO STA. 119+78.37

STA. 121+04.63 TO STA. 125+38.79
STA. 125+86.19 TO STA. 131+43.05
STA. 132+35.36 TO STA. 138+10.18
STA. 139+08.60 TO STA. 141+32.14
STA. 142+07.14 TO STA. 145+05.10
STA. 146+14.37 TO STA. 146+50.00
STA. 152+16.55 TO STA. 152+75.00
STA. 156+75.00 TO STA. 157+07.65

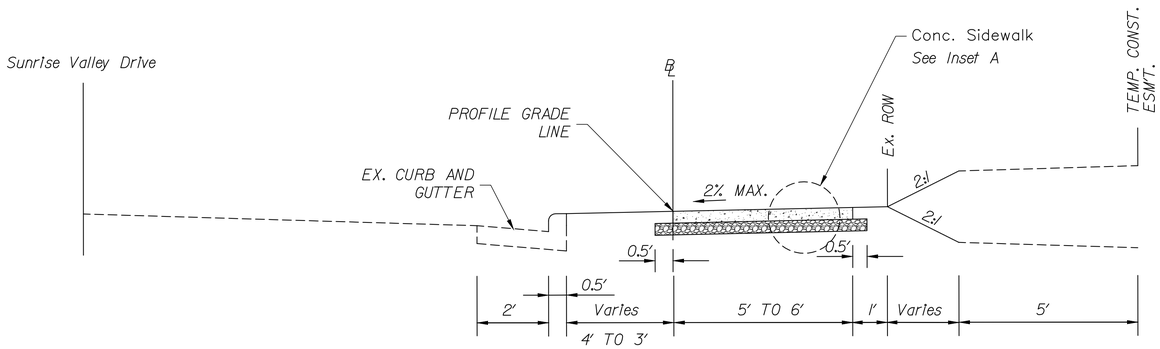

STA. 105+34.71 TO STA. 105+60.04
STA. 106+75.00 TO STA. 107+05.02
STA. 111+00.00 TO STA. 111+25.00
STA. 112+00.85 TO STA. 112+25.88
STA. 112+54.24 TO STA. 112+79.81
STA. 113+60.71 TO STA. 113+69.62
STA. 114+27.03 TO STA. 114+35.71
STA. 116+80.97 TO STA. 116+89.09
STA. 117+47.89 TO STA. 117+55.97

STA. 132+17.66 TO STA. 132+35.36
STA. 141+.32.14 TO STA. 141+43.12
STA. 141+96.41 TO STA. 142+07.14
STA. 146+50.00 TO STA. 148+04.85

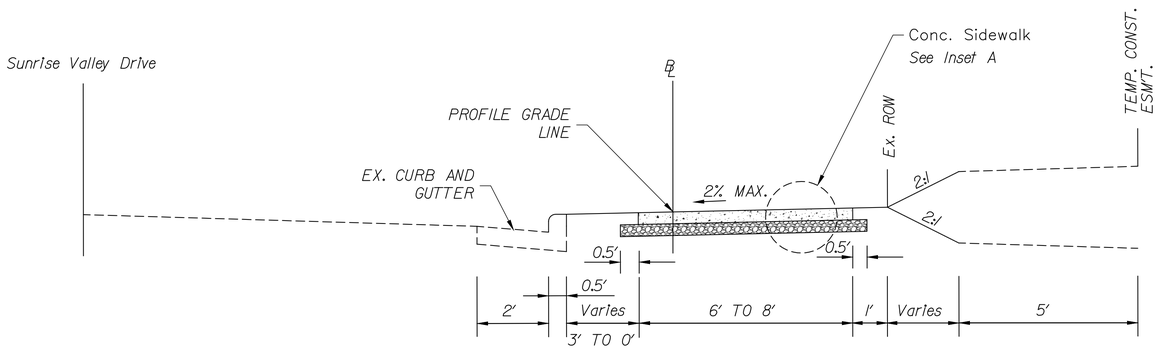

STA. 105+60.04 TO STA. 105+90.63
STA. 106+50.56 TO STA. 106+75.00
STA. 110+11.32 TO STA. 111+00.00
STA. 112+25.88 TO STA. 112+54.24
STA. 113+69.62 TO STA. 113+85.69
STA. 114+10.71 TO STA. 114+27.03
STA. 116+89.09 TO STA. 117+05.97
STA. 117+30.97 TO STA. 117+47.89

STA. 119+95.36 TO STA. 120+08.55
STA. 141+43.12 TO STA. 141+57.14
STA. 141+82.14 TO STA. 141+96.41
STA. 148+04.85 TO STA. 149+77.63
STA. 152+05.11 TO STA. 152+16.55

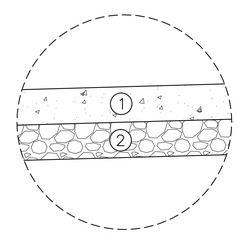

INSET A

LEGEND:

1. SIDEWALK: 4" A-3 CONCRETE
2. SIDEWALK BASE: 4" 21A AGGREGATE BASE MATERIAL

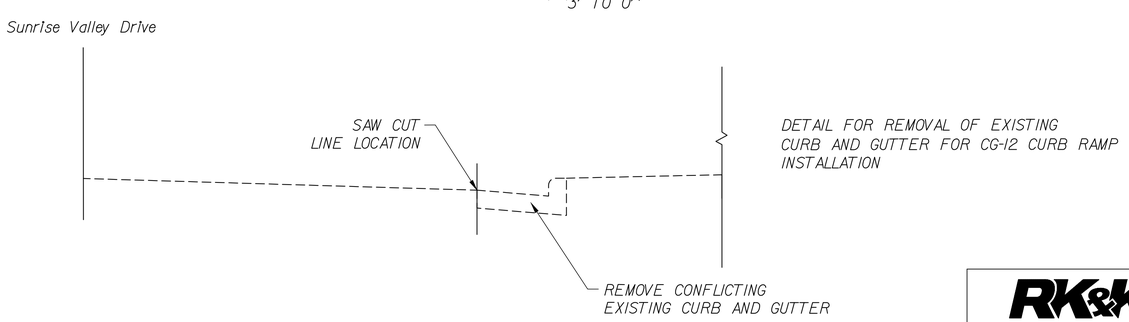

DETAIL FOR REMOVAL OF EXISTING CURB AND GUTTER FOR CG-12 CURB RAMP INSTALLATION

TAX MAP 17-4, 26-2, 27-1

EMERGENCY POLICE – FIRE – RESCUE 911

REVISED: MARCH, 2012

FAIRFAX COUNTY, VIRGINIA

DEPARTMENT OF PUBLIC WORKS AND ENVIRONMENTAL SERVICES–UTILITIES DESIGN & CONSTRUCTION DIVISION
12000 GOVERNMENT CENTER PARKWAY, SUITE 463 FAIRFAX, VA., 22035–0052

OFFICE OF CAPITAL FACILITIES
703–324–5800

SUNRISE VALLEY DRIVE SIDEWALK – SOUTH SIDE

TYPICAL SECTIONS

HUNTER MILL DISTRICT, FAIRFAX COUNTY, VIRGINIA

CONTRACT NO. PROJECT NO. 1400073–2012

SCALE
HORIZ: N.T.S
VERT: N.T.S

DESIGNED BY: JGH
DRAFTED BY: JGH
CHECKED BY: GRR

SHEET 2C

REVISIONS △#	DESCRIPTION	BY	APPROVED	DATE

RK&K
10306 EATON PLACE, SUITE 240
FAIRFAX, VA 22030
(P) 703 246–0028
(F) 703 246–0123

THESE PLANS ARE UNFINISHED AND ARE NOT TO BE USED FOR ANY TYPE OF CONSTRUCTION.

DRAWING NAME:

FUND# 400–C40011 (124)

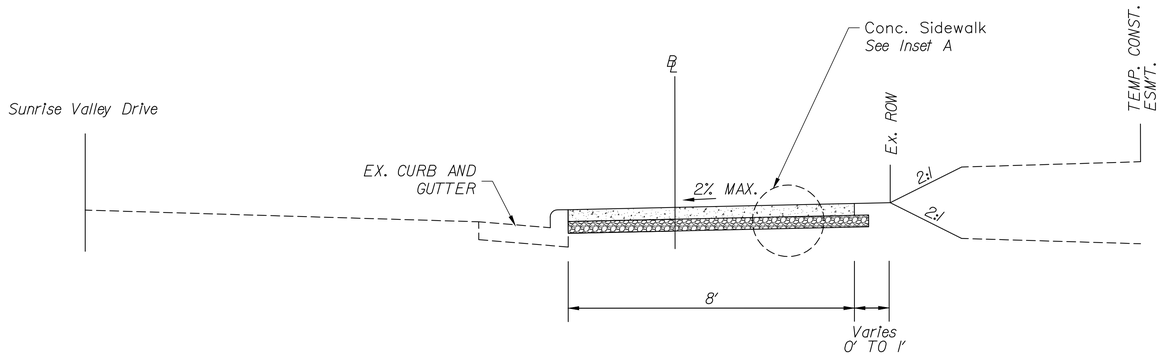

STA. 113+85.69 TO STA. 114+10.71
STA. 117+05.97 TO STA. 117+30.97
STA. 141+57.14 TO STA. 141+82.14
STA. 149+77.63 TO STA. 151+11.61

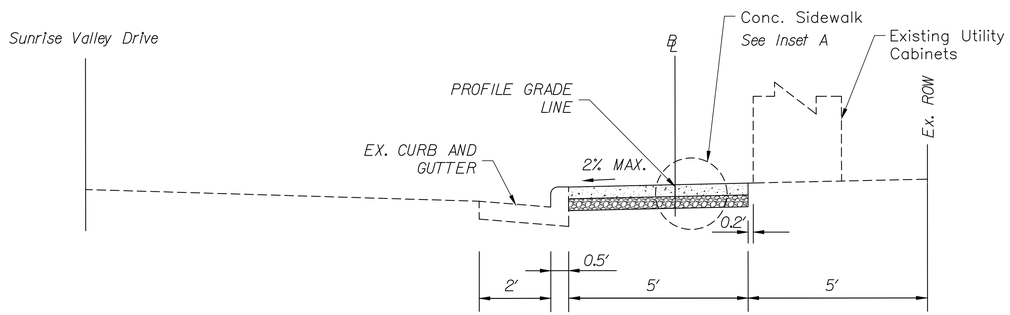

STA. 125+38.79 TO STA. 125+51.85
STA. 125+72.48 TO STA. 125+86.19

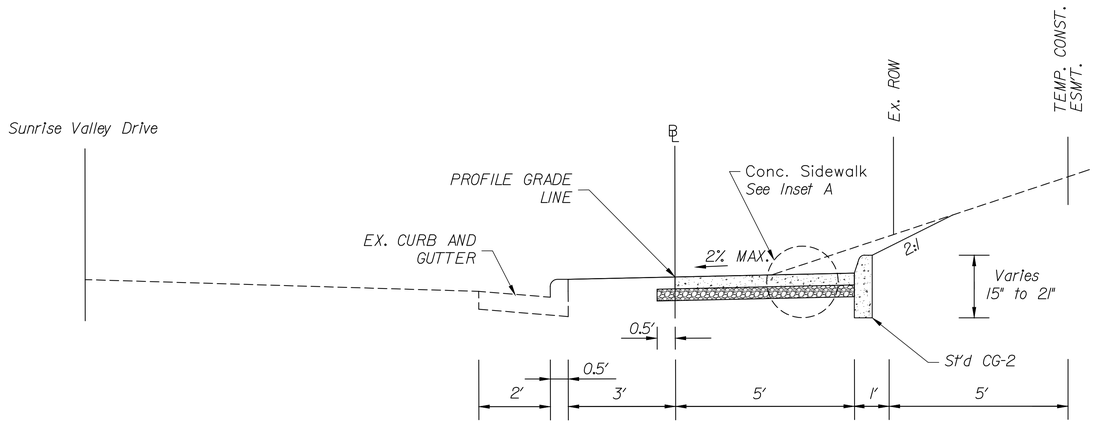

STA. 152+75.00 TO STA. 156+75.00

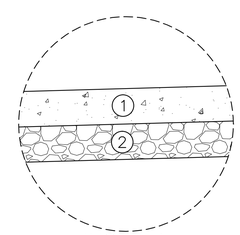

INSET A

LEGEND:

1. SIDEWALK: 4" A-3 CONCRETE
2. SIDEWALK BASE: 4" 21A AGGREGATE BASE MATERIAL

CURB RAMPS AND SIDE STREETS LIMITS

STA. 105+90.63 TO STA. 106+50.56
STA. 109+21.77 TO STA. 110+11.32
STA. 114+78.73 TO STA. 115+59.56
STA. 115+70.13 TO STA. 115+87.13
STA. 119+78.37 TO STA. 119+95.36
STA. 120+08.55 TO STA. 121+04.63
STA. 125+51.85 TO STA. 125+72.48
STA. 131+43.05 TO STA. 132+17.66
STA. 138+10.18 TO STA. 139+08.60
STA. 145+05.10 TO STA. 146+14.37
STA. 151+11.61 TO STA. 152+05.11

NOTE:

SEE TYPICAL SECTION FOR BMP ON SHEET 13D.

THESE PLANS ARE UNFINISHED AND ARE NOT TO BE USED FOR ANY TYPE OF CONSTRUCTION.

DRAWING NAME:

RK&K
10306 EATON PLACE, SUITE 240
FAIRFAX, VA 22030
(P) 703 246-0028
(F) 703 246-0123

TAX MAP 17-4, 26-2, 27-1

EMERGENCY POLICE – FIRE – RESCUE 911 REVISED: MARCH, 2012

FAIRFAX COUNTY, VIRGINIA
DEPARTMENT OF PUBLIC WORKS AND ENVIRONMENTAL SERVICES–UTILITIES DESIGN & CONSTRUCTION DIVISION
12000 GOVERNMENT CENTER PARKWAY, SUITE 463 FAIRFAX, VA., 22035–0052

OFFICE OF CAPITAL FACILITIES
703–324–5800

SUNRISE VALLEY DRIVE SIDEWALK – SOUTH SIDE

TYPICAL SECTIONS

HUNTER MILL DISTRICT, FAIRFAX COUNTY, VIRGINIA

CONTRACT NO. PROJECT NO. 1400073-2012

REVISIONS △#	DESCRIPTION	BY	APPROVED	DATE

SCALE		SHEET
HORIZ: N.T.S	DESIGNED BY: JGH	2D
VERT: N.T.S	DRAFTED BY: JGH	
	CHECKED BY: GRR	

FUND# 400–C40011 (124)

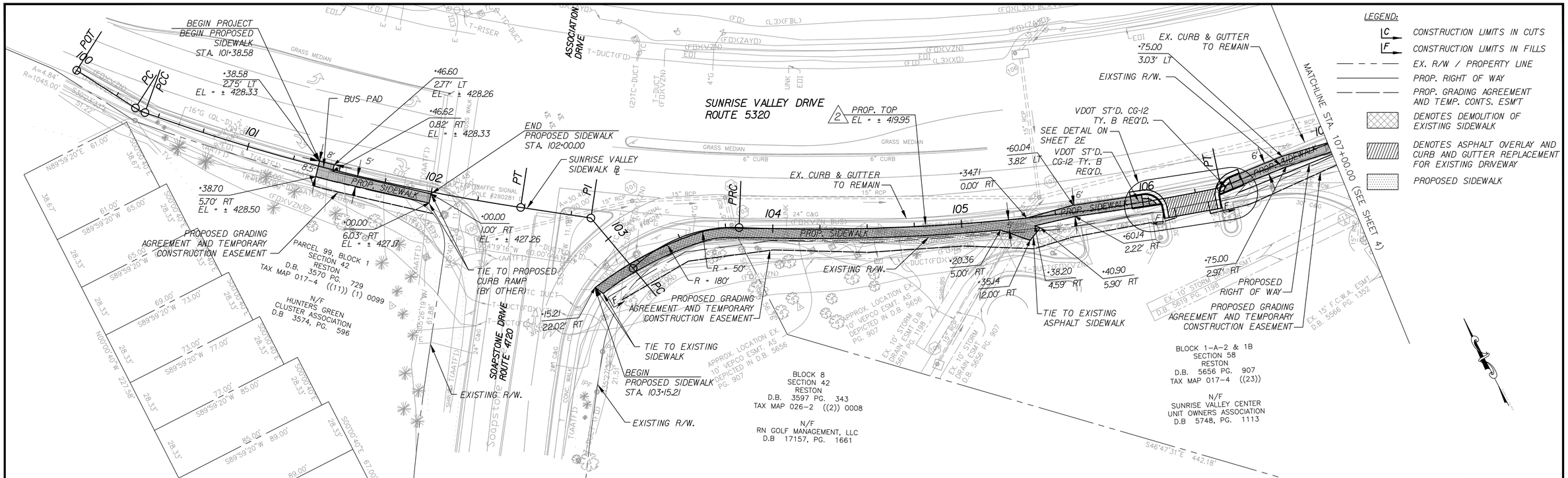

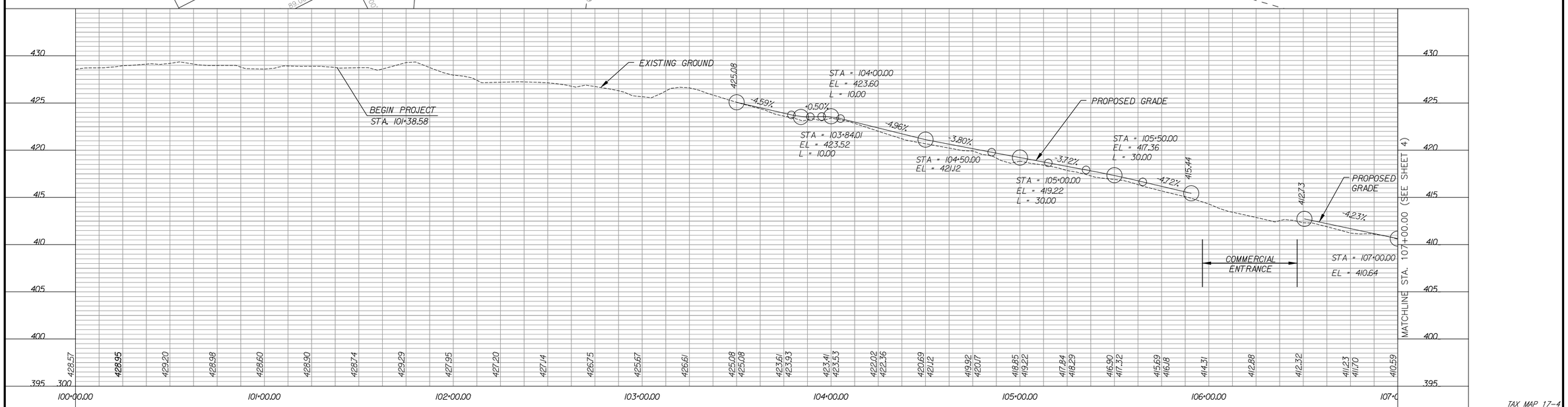

EXISTING HANDHOLE / VAULT TO BE RELOCATED BY OTHERS

ADJUST EXISTING UTILITY COVER TO PROPOSED GRADE

THESE PLANS ARE UNFINISHED AND ARE NOT TO BE USED FOR ANY TYPE OF CONSTRUCTION.

DRAWING NAME:

GRAPHIC SCALE
25 0 25 50
1" = 25'

RK&K
10306 EATON PLACE, SUITE 240
FAIRFAX, VA 22030
(P) 703 246-0028
(F) 703 246-0123

EMERGENCY POLICE – FIRE – RESCUE 911

REVISED: MARCH, 2012

FAIRFAX COUNTY, VIRGINIA
DEPARTMENT OF PUBLIC WORKS AND ENVIRONMENTAL SERVICES–UTILITIES DESIGN & CONSTRUCTION DIVISION
12000 GOVERNMENT CENTER PARKWAY, SUITE 463 FAIRFAX, VA., 22035–0052

OFFICE OF CAPITAL FACILITIES
703–324–5800

REVISIONS

△#	DESCRIPTION	BY	APPROVED	DATE

SUNRISE VALLEY DRIVE SIDEWALK – SOUTH SIDE
PLAN AND PROFILE
STA. 100+00.00 TO 107+00.00
HUNTER MILL DISTRICT, FAIRFAX COUNTY, VIRGINIA

CONTRACT NO. PROJECT NO. 1400073–2012

SCALE
HORIZ: 1"=25'
VERT: 1"=5'

DESIGNED BY: JGH
DRAFTED BY: JGH
CHECKED BY: GRR

SHEET 3

FUND# 400–C40011 (124)

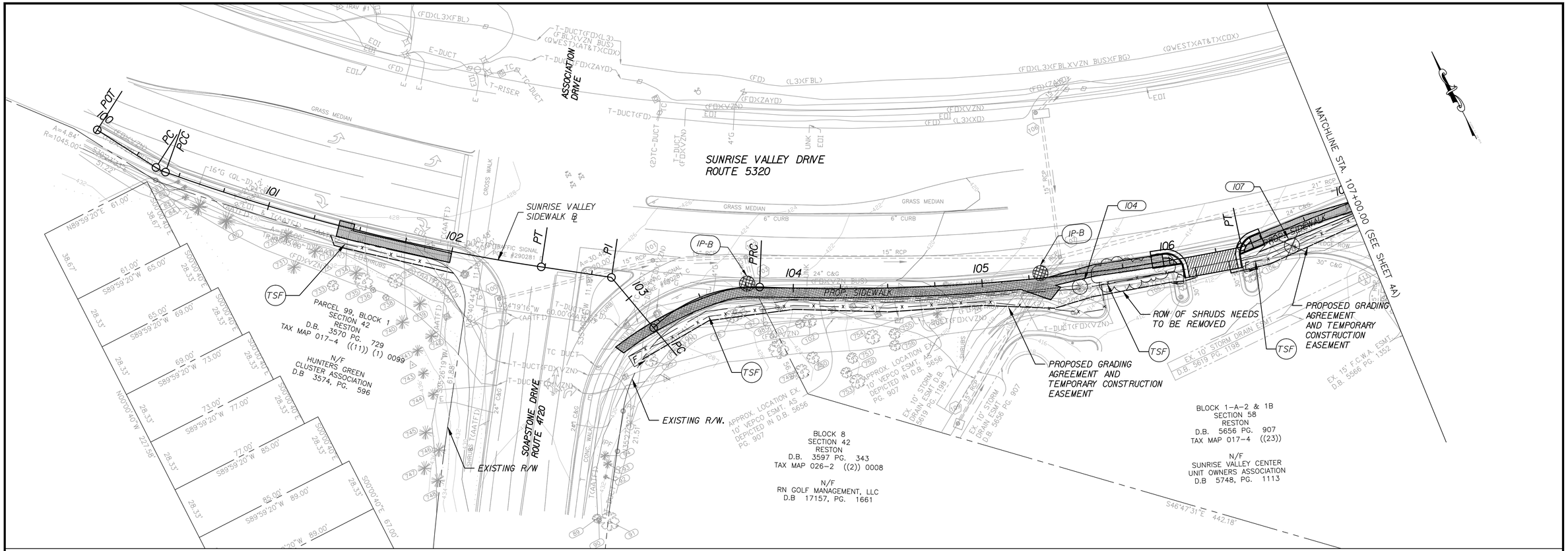

NOTES:

1. ALL E&SC MEASURES SHALL BE INSTALLED PRIOR TO THE START OF CONSTRUCTION.
2. MAINTAIN E&SC AS PRESCRIBED IN PLANS THROUGHOUT CONSTRUCTION.
3. REMOVE E&SC UPON FINAL GRADING, STABILIZATION, AND SEEDING.

LEGEND:

- C — CONSTRUCTION LIMITS IN CUTS
- F — CONSTRUCTION LIMITS IN FILLS
- EX. R/W / PROPERTY LINE
- PROP. RIGHT OF WAY
- PROP. GRADING AGREEMENT AND TEMP. CONST. ESM'T
- PROPOSED SIDEWALK
- DENOTES DEMOLITION OF EXISTING SIDEWALK
- DENOTES ASPHALT OVERLAY AND CURB AND GUTTER REPLACEMENT FOR EXISTING DRIVEWAY
- IP-B — INLET PROTECTION TYPE B
- TSF — X — TEMPORARY SILT FENCE
- TREE REMOVAL
- TREE PROTECTION

TREE #	SIZE, SPECIES, AND DRIPLINE DIAMETER	COMMENTS
104	15" SPRUCE 20' DRIPLINE	PROTECT
107	5" CEDAR 10' DRIPLINE	REMOVE

TAX MAP 17-4

EMERGENCY POLICE – FIRE – RESCUE 911

REVISED: MARCH, 2012

FAIRFAX COUNTY, VIRGINIA

DEPARTMENT OF PUBLIC WORKS AND ENVIRONMENTAL SERVICES–UTILITIES DESIGN & CONSTRUCTION DIVISION
12000 GOVERNMENT CENTER PARKWAY, SUITE 463 FAIRFAX, VA., 22035–0052

OFFICE OF CAPITAL FACILITIES
703–324–5800

GRAPHIC SCALE

25 0 25 50

1" = 25'

RK&K

10306 EATON PLACE, SUITE 240
FAIRFAX, VA 22030
(P) 703 246-0028
(F) 703 246-0123

REVISIONS

△#	DESCRIPTION	BY	APPROVED	DATE

SUNRISE VALLEY DRIVE SIDEWALK – SOUTH SIDE
EROSION AND SEDIMENT CONTROL PLAN
STA. 100+00.00 TO 107+00.00
HUNTER MILL DISTRICT, FAIRFAX COUNTY, VIRGINIA

CONTRACT NO. PROJECT NO. 1400073-2012

SCALE
HORIZ: 1"=25'
VERT: 1"=5'

DESIGNED BY: JGH
DRAFTED BY: JGH
CHECKED BY: GRR

SHEET 3A

DRAWING NAME:

THESE PLANS ARE UNFINISHED AND ARE NOT TO BE USED FOR ANY TYPE OF CONSTRUCTION.

FUND# 400-C40011 (124)

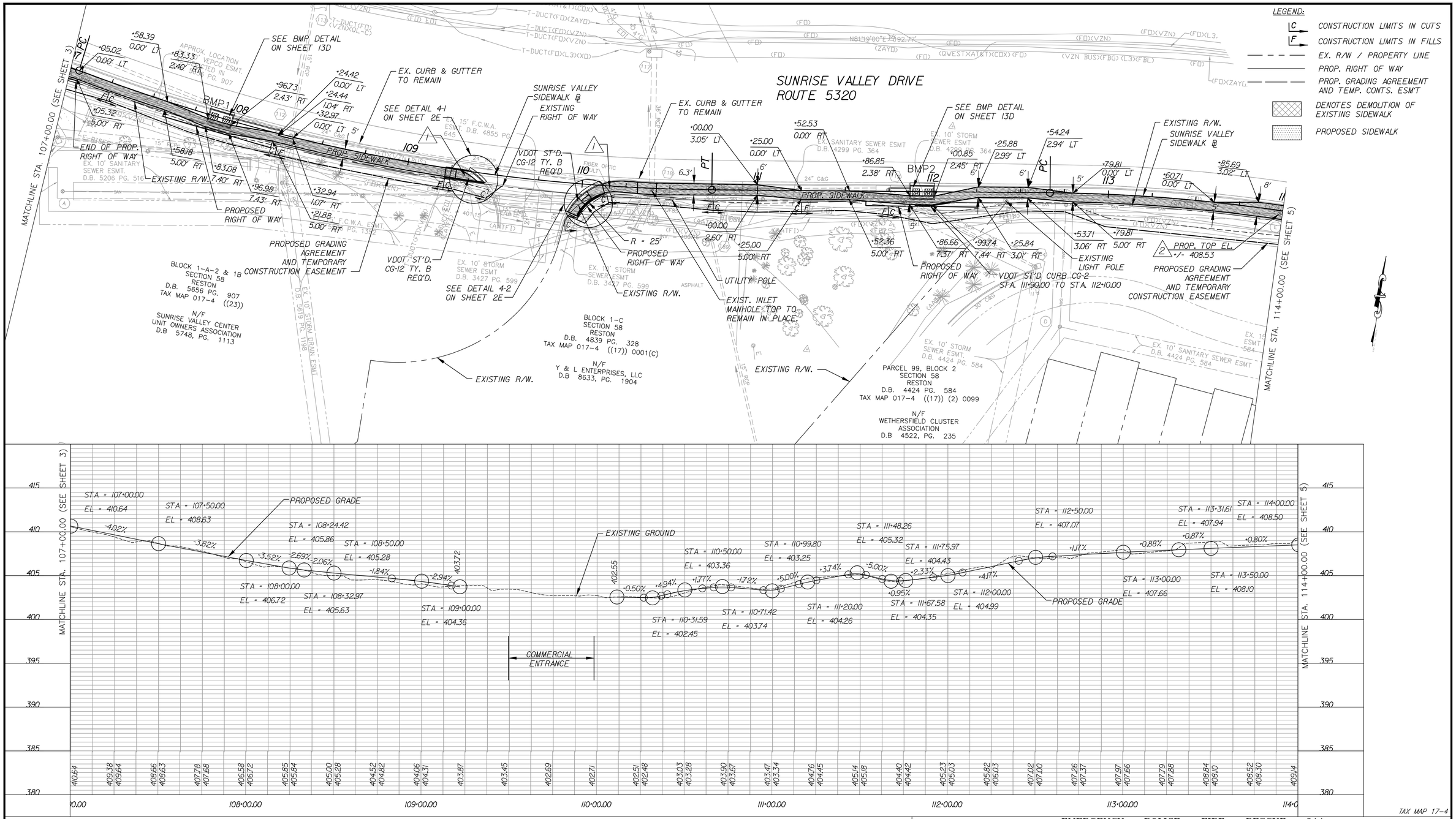

EXISTING HANDHOLE / VAULT TO BE RELOCATED BY OTHERS

ADJUST EXISTING UTILITY COVER TO PROPOSED GRADE

THESE PLANS ARE UNFINISHED AND ARE NOT TO BE USED FOR ANY TYPE OF CONSTRUCTION.

DRAWING NAME:

GRAPHIC SCALE

25 0 25 50

1" = 25'

RK&K

10306 EATON PLACE, SUITE 240
FAIRFAX, VA 22030
(P) 703 246-0028
(F) 703 246-0123

EMERGENCY POLICE – FIRE – RESCUE 911

REVISED: MARCH, 2012

FAIRFAX COUNTY, VIRGINIA

DEPARTMENT OF PUBLIC WORKS AND ENVIRONMENTAL SERVICES–UTILITIES DESIGN & CONSTRUCTION DIVISION
12000 GOVERNMENT CENTER PARKWAY, SUITE 463 FAIRFAX, VA., 22035–0052

OFFICE OF CAPITAL FACILITIES
703–324–5800

REVISIONS

△#	DESCRIPTION	BY	APPROVED	DATE

SUNRISE VALLEY DRIVE SIDEWALK – SOUTH SIDE
PLAN AND PROFILE
STA. 107+00.00 TO 114+00.00
HUNTER MILL DISTRICT, FAIRFAX COUNTY, VIRGINIA

CONTRACT NO. | PROJECT NO. 1400073-2012

SCALE
HORIZ: 1"=25'
VERT: 1"=5'

DESIGNED BY: JGH
DRAFTED BY: JGH
CHECKED BY: GRR

SHEET 4

FUND# 400–C40011 (124)

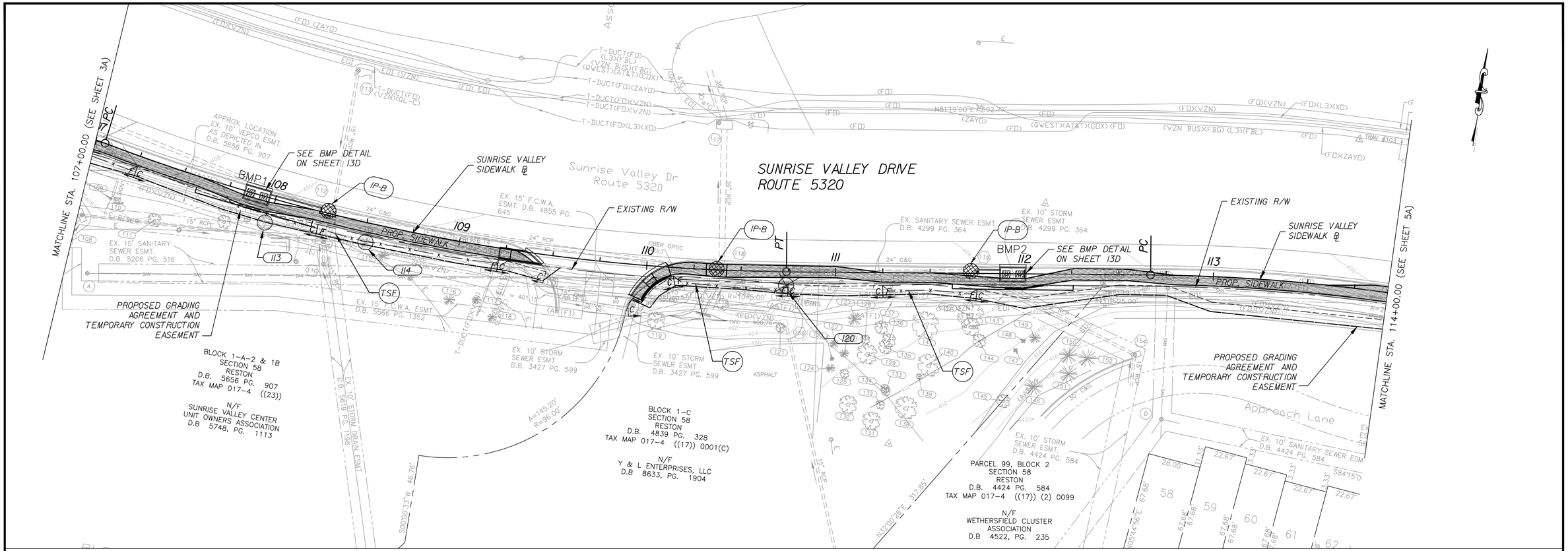

TREE #	SIZE, SPECIES, AND DRIPLINE DIAMETER	COMMENTS
120	24" PINE 40' DRIPLINE	REMOVE
113	7" MAPLE 20' DRIPLINE	PROTECT
114	10" PINE (DOUBLE) 25' DRIPLINE	PROTECT

NOTES:

1. ALL E&SC MEASURES SHALL BE INSTALLED PRIOR TO THE START OF CONSTRUCTION.
2. MAINTAIN E&SC AS PRESCRIBED IN PLANS THROUGHOUT CONSTRUCTION.
3. REMOVE E&SC UPON FINAL GRADING, STABILIZATION, AND SEEDING.

LEGEND:

- C — CONSTRUCTION LIMITS IN CUTS
- F — CONSTRUCTION LIMITS IN FILLS
- EX. R/W / PROPERTY LINE
- PROP. RIGHT OF WAY
- PROP. GRADING AGREEMENT AND TEMP. CONST. ESM'T
- PROPOSED SIDEWALK
- DENOTES DEMOLITION OF EXISTING SIDEWALK
- IP-B — INLET PROTECTION TYPE B
- TSF — TEMPORARY SILT FENCE
- TREE REMOVAL
- TREE PROTECTION

TAX MAP 17-4

EMERGENCY POLICE – FIRE – RESCUE 911

REVISED: MARCH, 2012

FAIRFAX COUNTY, VIRGINIA

DEPARTMENT OF PUBLIC WORKS AND ENVIRONMENTAL SERVICES–UTILITIES DESIGN & CONSTRUCTION DIVISION
12000 GOVERNMENT CENTER PARKWAY, SUITE 463 FAIRFAX, VA., 22035–0052

OFFICE OF CAPITAL FACILITIES
703–324–5800

SUNRISE VALLEY DRIVE SIDEWALK – SOUTH SIDE
EROSION AND SEDIMENT CONTROL PLAN
STA. 107+00.00 TO 114+00.00
HUNTER MILL DISTRICT, FAIRFAX COUNTY, VIRGINIA

CONTRACT NO. PROJECT NO. 1400073–2012

SCALE
HORIZ: 1"=25'
VERT: 1"=5'

DESIGNED BY: JGH
DRAFTED BY: JGH
CHECKED BY: GRR

SHEET 4A

REVISIONS △#	DESCRIPTION	BY	APPROVED	DATE

GRAPHIC SCALE
25 0 25 50
1" = 25'

RK&K
10306 EATON PLACE, SUITE 240
FAIRFAX, VA 22030
(P) 703 246–0028
(F) 703 246–0123

THESE PLANS ARE UNFINISHED AND ARE NOT TO BE USED FOR ANY TYPE OF CONSTRUCTION.

DRAWING NAME:

FUND# 400–C40011 (124)

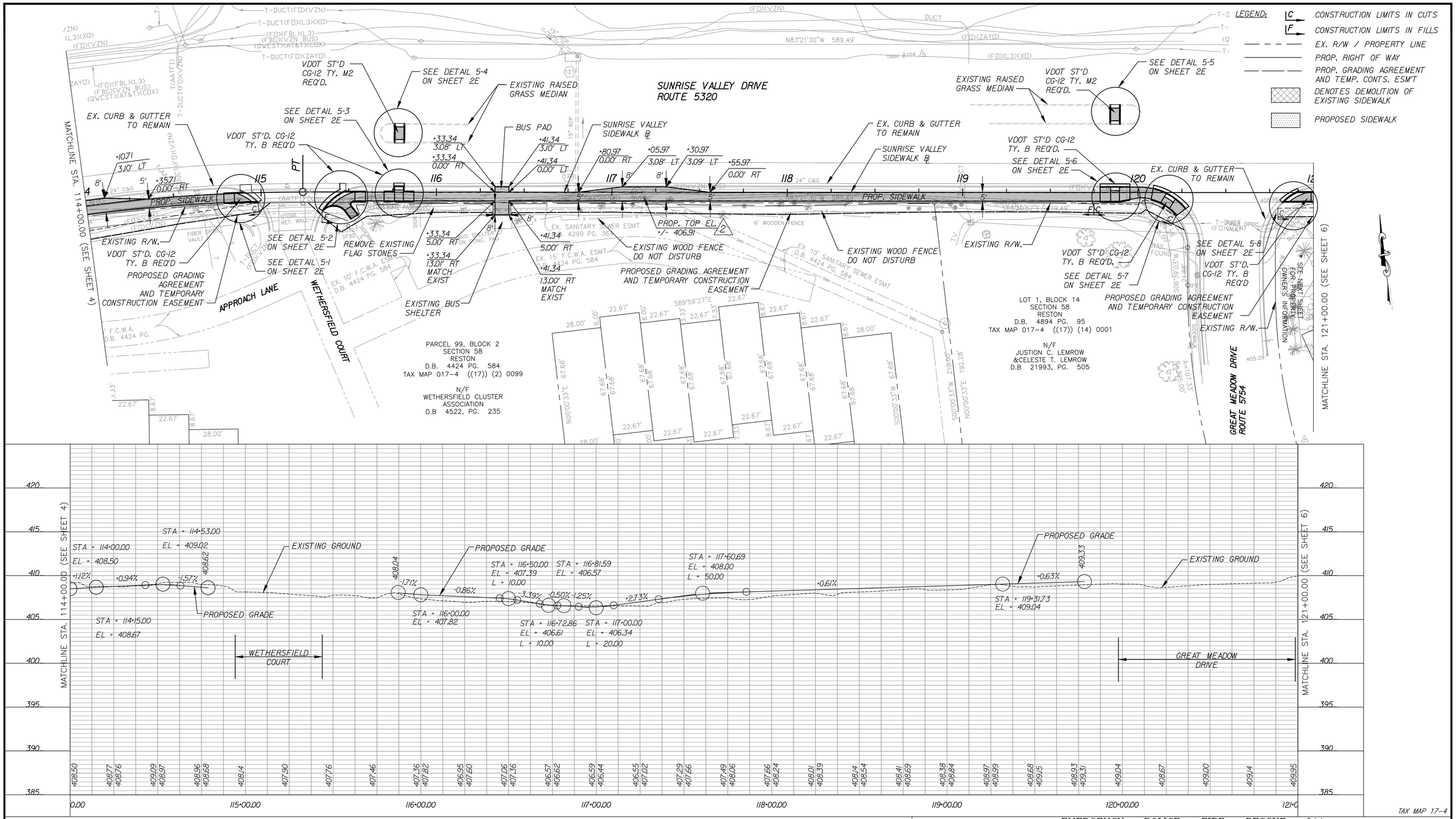

△1 EXISTING HANDHOLE / VAULT TO BE RELOCATED BY OTHERS

△2 ADJUST EXISTING UTILITY COVER TO PROPOSED GRADE

GRAPHIC SCALE

25 0 25 50

1" = 25'

RK&K

10306 EATON PLACE, SUITE 240
FAIRFAX, VA 22030
(P) 703 246-0028
(F) 703 246-0123

EMERGENCY POLICE - FIRE - RESCUE 911

REVISED: MARCH, 2012

FAIRFAX COUNTY, VIRGINIA

DEPARTMENT OF PUBLIC WORKS AND ENVIRONMENTAL SERVICES-UTILITIES DESIGN & CONSTRUCTION DIVISION
12000 GOVERNMENT CENTER PARKWAY, SUITE 463 FAIRFAX, VA., 22035-0052

OFFICE OF CAPITAL FACILITIES
703-324-5800

SUNRISE VALLEY DRIVE SIDEWALK - SOUTH SIDE
PLAN AND PROFILE
STA. 114+00.00 TO 121+00.00
HUNTER MILL DISTRICT, FAIRFAX COUNTY, VIRGINIA

REVISIONS △#	DESCRIPTION	BY	APPROVED	DATE

CONTRACT NO. PROJECT NO. 1400073-2012

SCALE HORIZ: 1"=25' VERT: 1"=5'

DESIGNED BY: JGH
DRAFTED BY: JGH
CHECKED BY: GRR

SHEET 5

FUND# 400-C40011 (124)

DRAWING NAME:

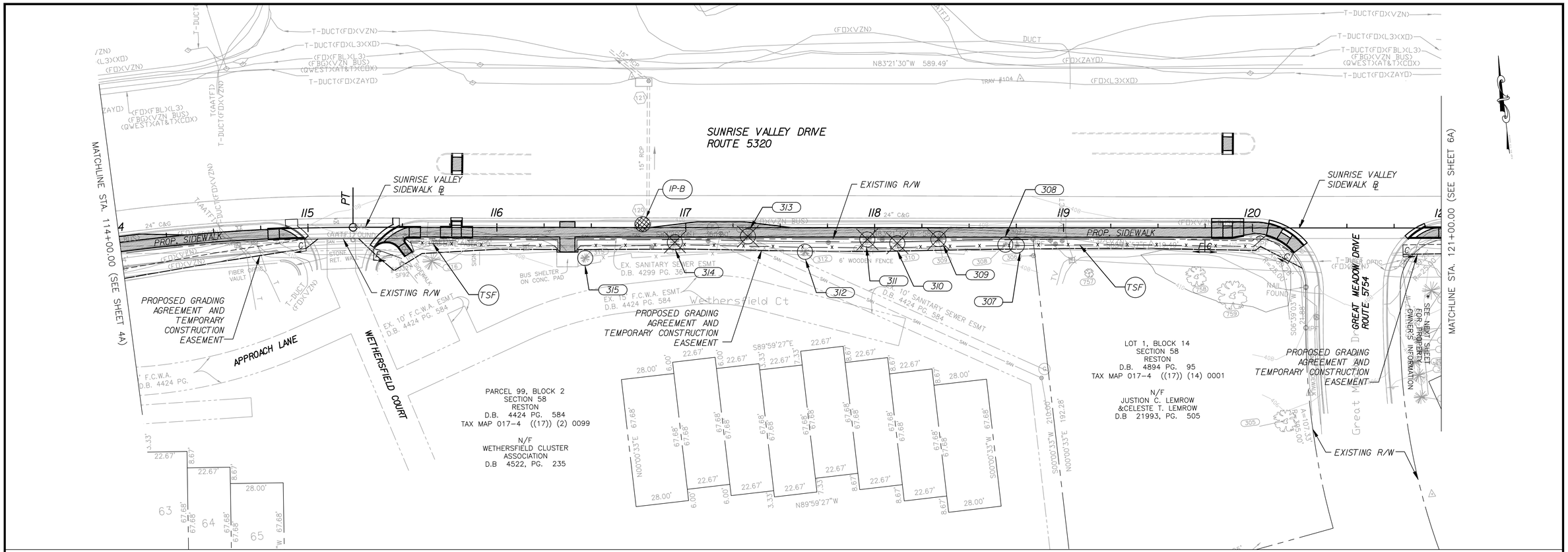

TREE #	SIZE, SPECIES, AND DRIPLINE DIAMETER	COMMENTS
307	10" CEDAR 12' DRIPLINE	PROTECT
308	9" CEDAR 10' DRIPLINE	PROTECT
309	8" CEDAR 20' DRIPLINE	REMOVE
310	12" CEDAR 20' DRIPLINE	REMOVE
311	8" CEDAR 20' DRIPLINE	REMOVE
312	8" CEDAR 20' DRIPLINE	PROTECT
313	12" CEDAR 20' DRIPLINE	REMOVE
314	10" CEDAR 20' DRIPLINE	REMOVE
315	9" CEDAR 20' DRIPLINE	PROTECT

NOTES:

1. ALL E&SC MEASURES SHALL BE INSTALLED PRIOR TO THE START OF CONSTRUCTION.
2. MAINTAIN E&SC AS PRESCRIBED IN PLANS THROUGHOUT CONSTRUCTION.
3. REMOVE E&SC UPON FINAL GRADING, STABILIZATION, AND SEEDING.

LEGEND:

- C — CONSTRUCTION LIMITS IN CUTS
- F — CONSTRUCTION LIMITS IN FILLS
- EX. R/W / PROPERTY LINE
- PROP. RIGHT OF WAY
- PROP. GRADING AGREEMENT AND TEMP. CONST. ESM'T
- PROPOSED SIDEWALK
- DENOTES DEMOLITION OF EXISTING SIDEWALK
- IP-B — INLET PROTECTION TYPE B
- TSF — X — TEMPORARY SILT FENCE
- TREE REMOVAL
- TREE PROTECTION

TAX MAP 17-4

EMERGENCY POLICE – FIRE – RESCUE 911

REVISED: MARCH, 2012

FAIRFAX COUNTY, VIRGINIA

DEPARTMENT OF PUBLIC WORKS AND ENVIRONMENTAL SERVICES–UTILITIES DESIGN & CONSTRUCTION DIVISION
12000 GOVERNMENT CENTER PARKWAY, SUITE 463 FAIRFAX, VA., 22035–0052

OFFICE OF CAPITAL FACILITIES
703–324–5800

GRAPHIC SCALE
25 0 25 50
1" = 25'

RK&K
10306 EATON PLACE, SUITE 240
FAIRFAX, VA 22030
(P) 703 246-0028
(F) 703 246-0123

REVISIONS

△#	DESCRIPTION	BY	APPROVED	DATE

SUNRISE VALLEY DRIVE SIDEWALK – SOUTH SIDE
EROSION AND SEDIMENT CONTROL PLAN
STA. 114+00.00 TO 121+00.00
HUNTER MILL DISTRICT, FAIRFAX COUNTY, VIRGINIA

CONTRACT NO. PROJECT NO. 1400073-2012

SCALE
HORIZ: 1"=25'
VERT: 1"=5'

DESIGNED BY: JGH
DRAFTED BY: JGH
CHECKED BY: GRR

SHEET 5A

FUND# 400-C40011 (124)

DRAWING NAME:

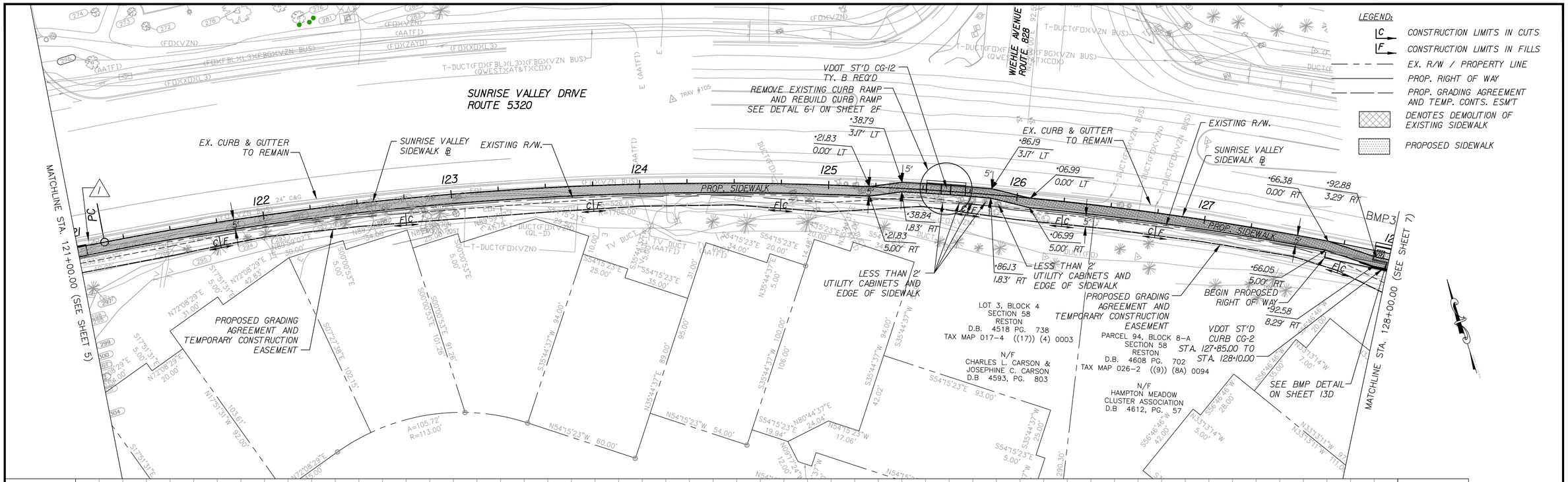

1 EXISTING HANDHOLE / VAULT TO BE RELOCATED BY OTHERS

2 ADJUST EXISTING UTILITY COVER TO PROPOSED GRADE

GRAPHIC SCALE
25 0 25 50
1" = 25'

RK&K
10306 EATON PLACE, SUITE 240
FAIRFAX, VA 22030
(P) 703 246-0028
(F) 703 246-0123

EMERGENCY POLICE – FIRE – RESCUE 911

REVISED: MARCH, 2012

FAIRFAX COUNTY, VIRGINIA
DEPARTMENT OF PUBLIC WORKS AND ENVIRONMENTAL SERVICES–UTILITIES DESIGN & CONSTRUCTION DIVISION
12000 GOVERNMENT CENTER PARKWAY, SUITE 463 FAIRFAX, VA., 22035–0052

OFFICE OF CAPITAL FACILITIES
703-324-5800

REVISIONS

△#	DESCRIPTION	BY	APPROVED	DATE

SUNRISE VALLEY DRIVE SIDEWALK – SOUTH SIDE
PLAN AND PROFILE
STA. 121+00.00 TO 128+00.00
HUNTER MILL DISTRICT, FAIRFAX COUNTY, VIRGINIA

CONTRACT NO. PROJECT NO. 1400073-2012

SCALE
HORIZ: 1"=25'
VERT: 1"=5'

DESIGNED BY: JGH
DRAFTED BY: JGH
CHECKED BY: GRR

SHEET 6

FUND# 400-C40011 (124)

DRAWING NAME:

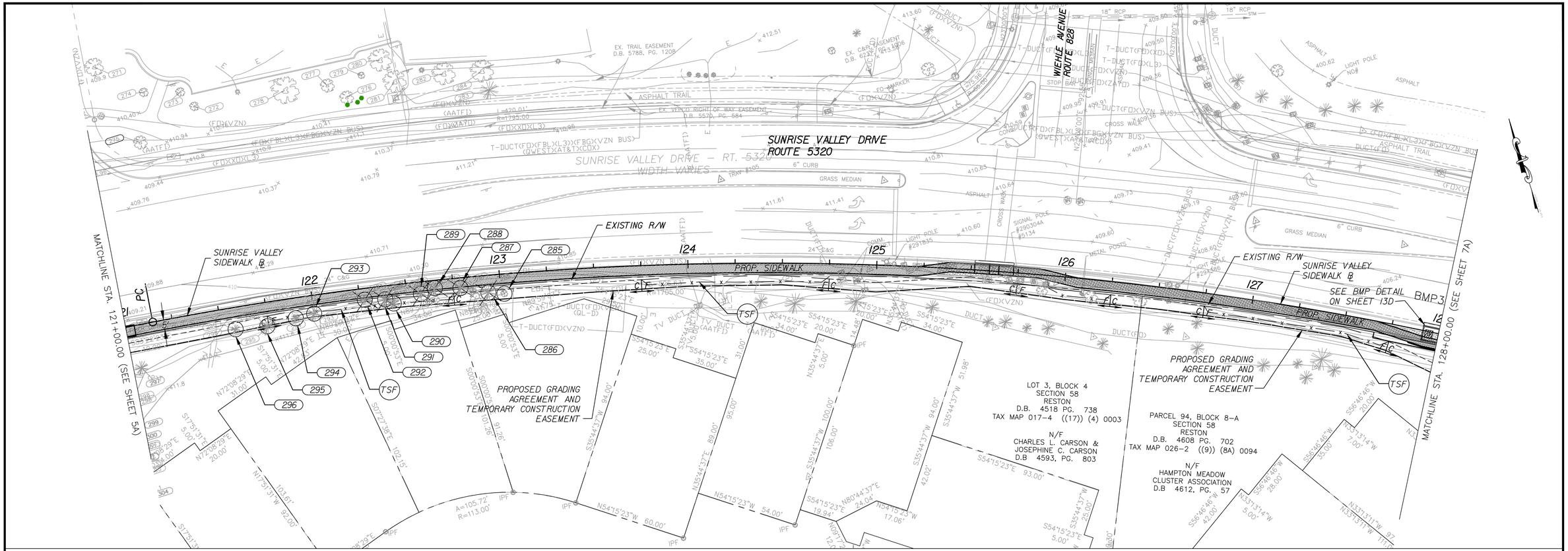

TREE #	SIZE, SPECIES, AND DRIPLINE DIAMETER	COMMENTS
285	7" DECIDUOUS 15' DRIPLINE	REMOVE
286	22" PINE 40' DRIPLINE	REMOVE
287	12" PINE 30' DRIPLINE	REMOVE
288	12" PINE 30' DRIPLINE	REMOVE
289	10" PINE 20' DRIPLINE	REMOVE
290	12" PINE 25' DRIPLINE	REMOVE
291	20" PINE 30' DRIPLINE	REMOVE
292	12" PINE 20' DRIPLINE	PROTECT
293	15" PINE 30' DRIPLINE	PROTECT
294	12" PINE 20' DRIPLINE	PROTECT
295	22" PINE 40' DRIPLINE	PROTECT

NOTES:

1. ALL E&SC MEASURES SHALL BE INSTALLED PRIOR TO THE START OF CONSTRUCTION.
2. MAINTAIN E&SC AS PRESCRIBED IN PLANS THROUGHOUT CONSTRUCTION.
3. REMOVE E&SC UPON FINAL GRADING, STABILIZATION, AND SEEDING.

LEGEND:

- C — CONSTRUCTION LIMITS IN CUTS
- F — CONSTRUCTION LIMITS IN FILLS
- EX. R/W / PROPERTY LINE
- PROP. RIGHT OF WAY
- PROP. GRADING AGREEMENT AND TEMP. CONST. ESM'T
- PROPOSED SIDEWALK
- DENOTES DEMOLITION OF EXISTING SIDEWALK
- IP-B — INLET PROTECTION TYPE B
- TSF — X — TEMPORARY SILT FENCE
- TREE REMOVAL
- TREE PROTECTION

TAX MAP 17-4, 26-2

EMERGENCY POLICE – FIRE – RESCUE 911

REVISED: MARCH, 2012

FAIRFAX COUNTY, VIRGINIA

DEPARTMENT OF PUBLIC WORKS AND ENVIRONMENTAL SERVICES–UTILITIES DESIGN & CONSTRUCTION DIVISION
12000 GOVERNMENT CENTER PARKWAY, SUITE 463 FAIRFAX, VA., 22035–0052

OFFICE OF CAPITAL FACILITIES
703–324–5800

GRAPHIC SCALE

25 0 25 50

1" = 25'

RK&K

10306 EATON PLACE, SUITE 240
FAIRFAX, VA 22030
(P) 703 246-0028
(F) 703 246-0123

REVISIONS

△#	DESCRIPTION	BY	APPROVED	DATE

SUNRISE VALLEY DRIVE SIDEWALK – SOUTH SIDE
EROSION AND SEDIMENT CONTROL PLAN
STA. 121+00.00 TO 128+00.00
HUNTER MILL DISTRICT, FAIRFAX COUNTY, VIRGINIA

CONTRACT NO. PROJECT NO. 1400073-2012

SCALE
HORIZ: 1"=25'
VERT: 1"=5'

DESIGNED BY: JGH
DRAFTED BY: JGH
CHECKED BY: GRR

SHEET 6A

DRAWING NAME:

FUND# 400-C40011 (124)

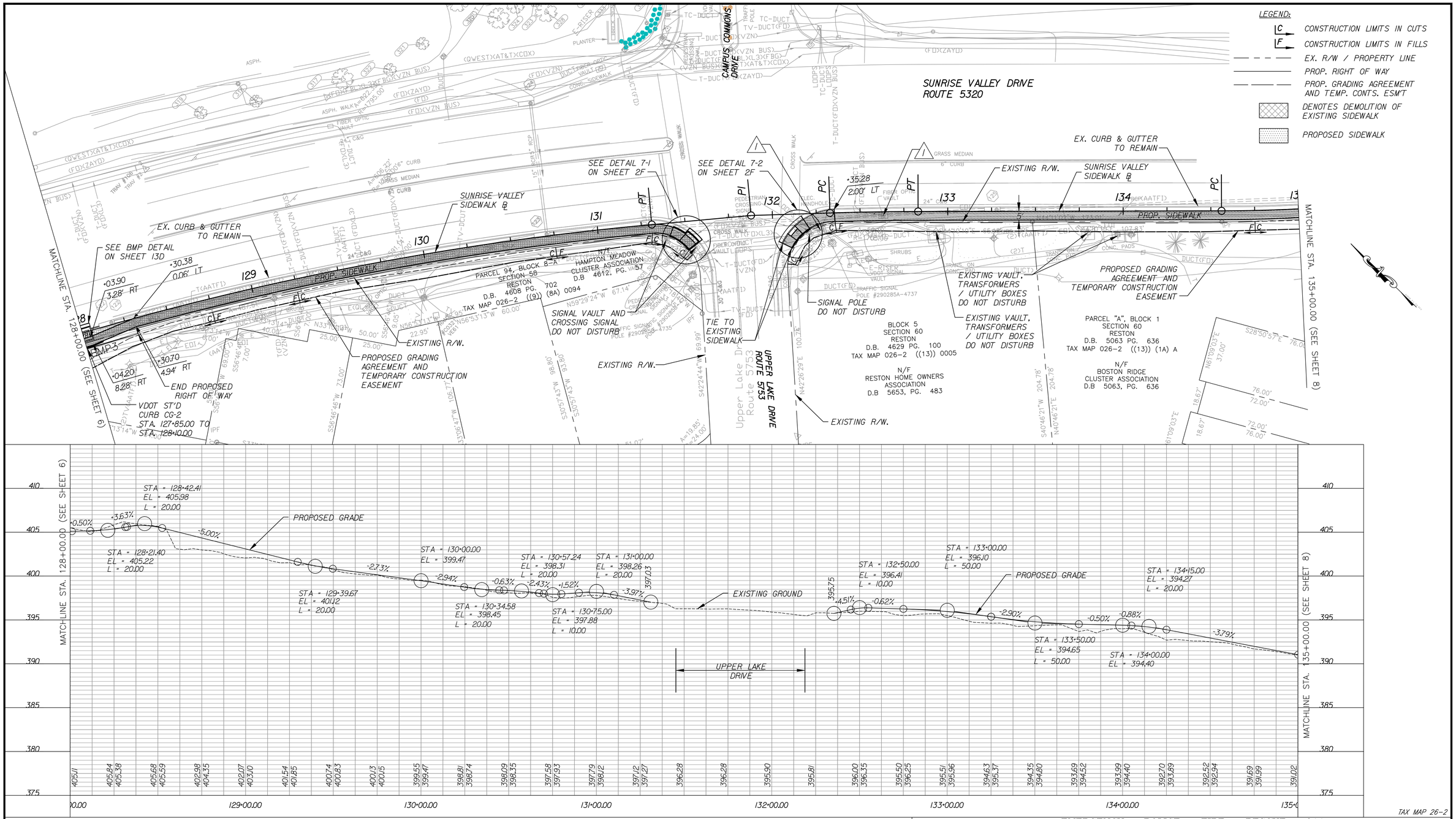

EXISTING HANDHOLE / VAULT TO BE RELOCATED BY OTHERS

ADJUST EXISTING UTILITY COVER TO PROPOSED GRADE

GRAPHIC SCALE

25 0 25 50

1" = 25'

RK&K

10306 EATON PLACE, SUITE 240
FAIRFAX, VA 22030
(P) 703 246-0028
(F) 703 246-0123

EMERGENCY POLICE – FIRE – RESCUE 911

REVISED: MARCH, 2012

FAIRFAX COUNTY, VIRGINIA

DEPARTMENT OF PUBLIC WORKS AND ENVIRONMENTAL SERVICES–UTILITIES DESIGN & CONSTRUCTION DIVISION
12000 GOVERNMENT CENTER PARKWAY, SUITE 463 FAIRFAX, VA., 22035–0052

OFFICE OF CAPITAL FACILITIES
703–324–5800

REVISIONS

△#	DESCRIPTION	BY	APPROVED	DATE

SUNRISE VALLEY DRIVE SIDEWALK – SOUTH SIDE
PLAN AND PROFILE
STA. 128+00.00 TO 135+00.00
HUNTER MILL DISTRICT, FAIRFAX COUNTY, VIRGINIA

CONTRACT NO. | PROJECT NO. 1400073-2012

SCALE
HORIZ: 1"=25'
VERT: 1"=5'

DESIGNED BY: JGH
DRAFTED BY: JGH
CHECKED BY: GRR

SHEET 7

FUND# 400–C40011 (124)

DRAWING NAME:

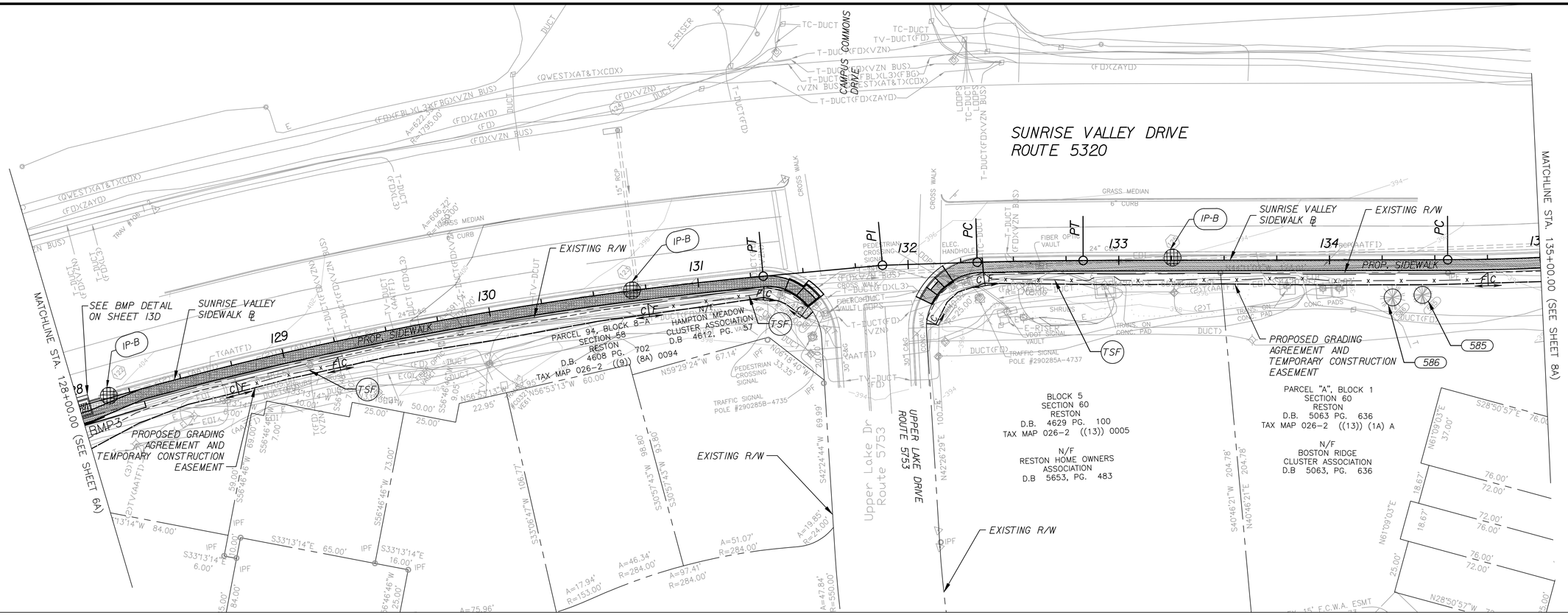

TREE #	SIZE, SPECIES, AND DRIPLINE DIAMETER	COMMENTS
585	18" PINE 40' DRIPLINE	PROTECT
586	24" PINE 50' DRIPLINE	PROTECT

NOTES:

1. ALL E&SC MEASURES SHALL BE INSTALLED PRIOR TO THE START OF CONSTRUCTION.
2. MAINTAIN E&SC AS PRESCRIBED IN PLANS THROUGHOUT CONSTRUCTION.
3. REMOVE E&SC UPON FINAL GRADING, STABILIZATION, AND SEEDING.

LEGEND:

- C — CONSTRUCTION LIMITS IN CUTS
- F — CONSTRUCTION LIMITS IN FILLS
- EX. R/W / PROPERTY LINE
- PROP. RIGHT OF WAY
- PROP. GRADING AGREEMENT AND TEMP. CONST. ESM'T
- PROPOSED SIDEWALK
- DENOTES DEMOLITION OF EXISTING SIDEWALK
- IP-B — INLET PROTECTION TYPE B
- TSF — X — TEMPORARY SILT FENCE
- TREE REMOVAL
- TREE PROTECTION

TAX MAP 26-2

EMERGENCY POLICE – FIRE – RESCUE 911 REVISED: MARCH, 2012

FAIRFAX COUNTY, VIRGINIA

DEPARTMENT OF PUBLIC WORKS AND ENVIRONMENTAL SERVICES–UTILITIES DESIGN & CONSTRUCTION DIVISION
12000 GOVERNMENT CENTER PARKWAY, SUITE 463 FAIRFAX, VA., 22035–0052

OFFICE OF CAPITAL FACILITIES
703–324–5800

GRAPHIC SCALE
25 0 25 50
1" = 25'

RK&K
10306 EATON PLACE, SUITE 240
FAIRFAX, VA 22030
(P) 703 246-0028
(F) 703 246-0123

REVISIONS

△#	DESCRIPTION	BY	APPROVED	DATE

SUNRISE VALLEY DRIVE SIDEWALK – SOUTH SIDE
EROSION AND SEDIMENT CONTROL PLAN
STA. 128+00.00 TO 135+00.00
HUNTER MILL DISTRICT, FAIRFAX COUNTY, VIRGINIA

CONTRACT NO. PROJECT NO. 1400073-2012

SCALE
HORIZ: 1"=25'
VERT: 1"=5'

DESIGNED BY: JGH
DRAFTED BY: JGH
CHECKED BY: GRR

SHEET 7A

FUND# 400-C40011 (124)

DRAWING NAME:

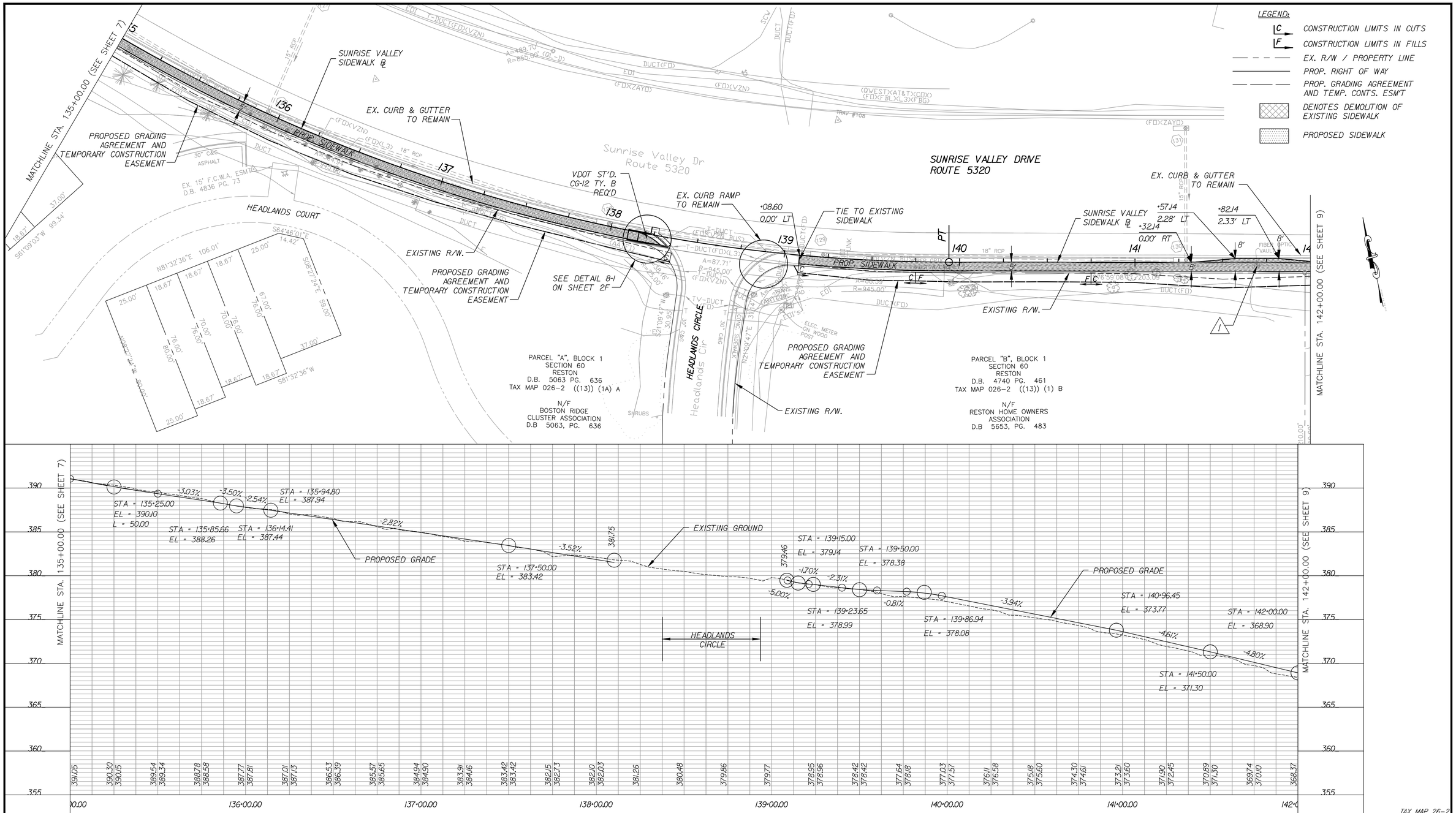

EXISTING HANDHOLE / VAULT TO BE RELOCATED BY OTHERS

ADJUST EXISTING UTILITY COVER TO PROPOSED GRADE

GRAPHIC SCALE

25 0 25 50

1" = 25'

RK&K

10306 EATON PLACE, SUITE 240
FAIRFAX, VA 22030
(P) 703 246-0028
(F) 703 246-0123

EMERGENCY POLICE – FIRE – RESCUE 911

REVISED: MARCH, 2012

FAIRFAX COUNTY, VIRGINIA

DEPARTMENT OF PUBLIC WORKS AND ENVIRONMENTAL SERVICES–UTILITIES DESIGN & CONSTRUCTION DIVISION
12000 GOVERNMENT CENTER PARKWAY, SUITE 463 FAIRFAX, VA., 22035–0052

OFFICE OF CAPITAL FACILITIES
703–324–5800

SUNRISE VALLEY DRIVE SIDEWALK – SOUTH SIDE
PLAN AND PROFILE
STA. 135+00.00 TO 142+00.00
HUNTER MILL DISTRICT, FAIRFAX COUNTY, VIRGINIA

CONTRACT NO. PROJECT NO. 1400073–2012

SCALE
HORIZ: 1"=25'
VERT: 1"=5'

DESIGNED BY: JGH
DRAFTED BY: JGH
CHECKED BY: GRR

SHEET 8

REVISIONS △#	DESCRIPTION	BY	APPROVED	DATE

DRAWING NAME:

FUND# 400–C40011 (124)

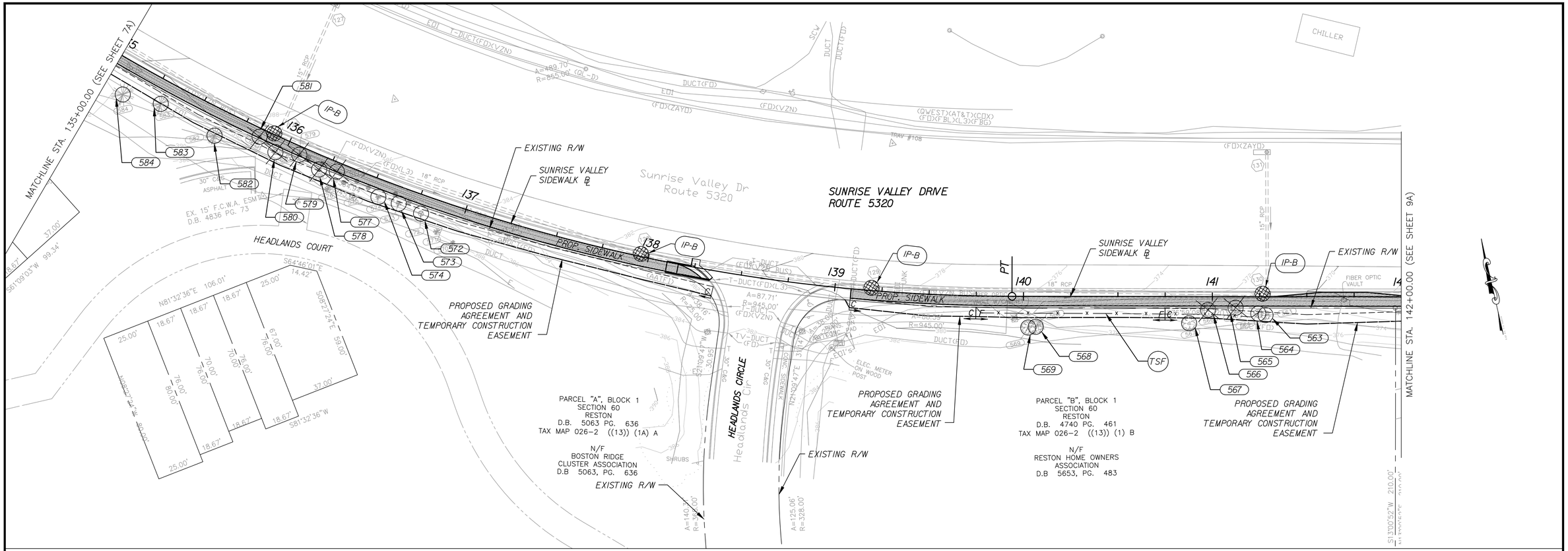

TREE #	SIZE, SPECIES, AND DRIPLINE DIAMETER	COMMENTS
563	7" MAPLE (DOUBLE) 20' DRIPLINE	PROTECT
564	7" MAPLE 20' DRIPLINE	PROTECT
565	7" MAPLE 20' DRIPLINE	REMOVE
566	10" DECIDUOUS (DBL) 30' DRIPLINE	REMOVE
567	12" OAK 30' DRIPLINE	PROTECT
568	10" MAPLE 30' DRIPLINE	PROTECT
569	10" MAPLE 30' DRIPLINE	PROTECT
572	4" HOLLY 12' DRIPLINE	PROTECT
573	8" CEDAR 12' DRIPLINE	PROTECT
574	8" CEDAR 12' DRIPLINE	PROTECT
577	4" HOLLY (DOUBLE) 12' DRIPLINE	REMOVE
578	8" CEDAR 12' DRIPLINE	REMOVE
579	10" CEDAR 12' DRIPLINE	REMOVE
580	4" HOLLY (DOUBLE) 12' DRIPLINE	REMOVE
581	8" CEDAR 10' DRIPLINE	REMOVE
582	18" PINE 40' DRIPLINE	PROTECT
583	16" PINE 40' DRIPLINE	PROTECT
584	24" PINE 50' DRIPLINE	PROTECT
585	18" PINE 40' DRIPLINE	PROTECT
586	24" PINE 50' DRIPLINE	PROTECT

NOTES:

1. ALL E&SC MEASURES SHALL BE INSTALLED PRIOR TO THE START OF CONSTRUCTION.
2. MAINTAIN E&SC AS PRESCRIBED IN PLANS THROUGHOUT CONSTRUCTION.
3. REMOVE E&SC UPON FINAL GRADING, STABILIZATION, AND SEEDING.

LEGEND:

- C — CONSTRUCTION LIMITS IN CUTS
- F — CONSTRUCTION LIMITS IN FILLS
- EX. R/W / PROPERTY LINE
- PROP. RIGHT OF WAY
- PROP. GRADING AGREEMENT AND TEMP. CONST. ESM'T
- PROPOSED SIDEWALK
- DENOTES DEMOLITION OF EXISTING SIDEWALK
- IP-B — INLET PROTECTION TYPE B
- TSF — TEMPORARY SILT FENCE
- TREE REMOVAL
- TREE PROTECTION

TAX MAP 26-2

EMERGENCY POLICE – FIRE – RESCUE 911 REVISED: MARCH, 2012

FAIRFAX COUNTY, VIRGINIA

DEPARTMENT OF PUBLIC WORKS AND ENVIRONMENTAL SERVICES–UTILITIES DESIGN & CONSTRUCTION DIVISION
12000 GOVERNMENT CENTER PARKWAY, SUITE 463 FAIRFAX, VA., 22035–0052

OFFICE OF CAPITAL FACILITIES
703–324–5800

GRAPHIC SCALE
25 0 25 50
1" = 25'

RK&K
10306 EATON PLACE, SUITE 240
FAIRFAX, VA 22030
(P) 703 246-0028
(F) 703 246-0123

REVISIONS

△#	DESCRIPTION	BY	APPROVED	DATE

SUNRISE VALLEY DRIVE SIDEWALK – SOUTH SIDE
EROSION AND SEDIMENT CONTROL PLAN
STA. 135+00.00 TO 142+00.00
HUNTER MILL DISTRICT, FAIRFAX COUNTY, VIRGINIA

CONTRACT NO. PROJECT NO. 1400073-2012

SCALE HORIZ: 1"=25' VERT: 1"=5'
DESIGNED BY: JGH
DRAFTED BY: JGH
CHECKED BY: GRR
SHEET 8A

DRAWING NAME:

FUND# 400-C40011 (124)

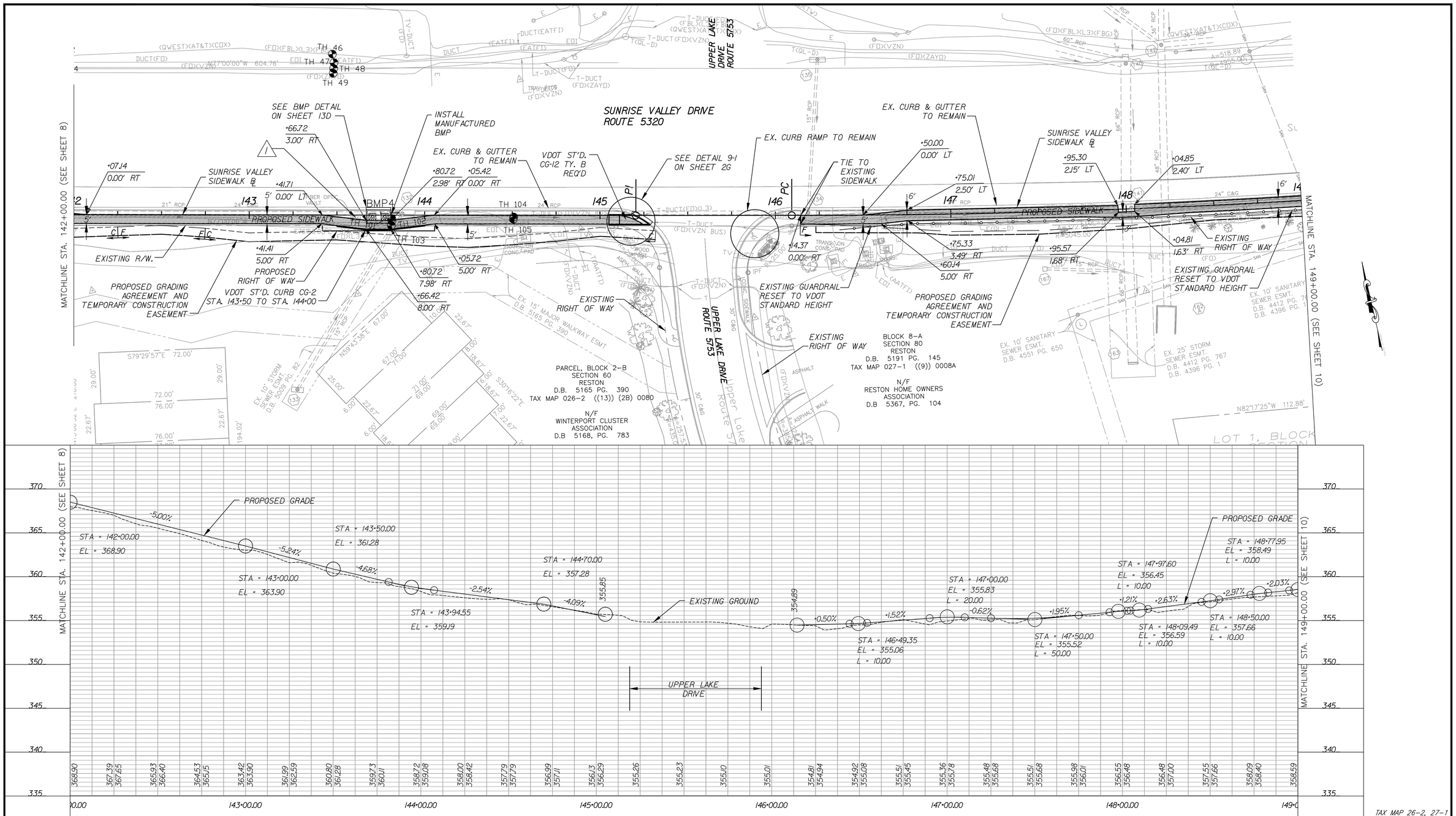

TAX MAP 26-2, 27-1

LEGEND:

- C — CONSTRUCTION LIMITS IN CUTS
- F — CONSTRUCTION LIMITS IN FILLS
- EXISTING RIGHT OF WAY / PROPERTY LINE
- PROPOSED RIGHT OF WAY
- PROPOSED GRADING AGREEMENT AND TEMPORARY CONSTRUCTION EASEMENT
- DENOTES DEMOLITION OF EXISTING SIDEWALK
- DENOTES ASPHALT OVERLAY AND CURB AND GUTTER REPLACEMENT FOR EXISTING DRIVEWAY
- PROPOSED SIDEWALK
- UTILITY TEST HOLE
- 1 EXISTING HANDHOLE / VAULT TO BE RELOCATED BY OTHERS
- 2 ADJUST EXISTING UTILITY COVER TO PROPOSED GRADE

THESE PLANS ARE UNFINISHED AND ARE NOT TO BE USED FOR ANY TYPE OF CONSTRUCTION.

NOTE: TEST HOLES PROVIDED BY SO-DEEP INC. AT THE REQUEST OF THE COUNTY. SEE SHEETS 14A-14F FOR MORE INFO.

GRAPHIC SCALE
25 0 25 50
1" = 25'

RK&K
10306 EATON PLACE, SUITE 240
FAIRFAX, VA 22030
(P) 703 246-0028
(F) 703 246-0123

DRAWING NAME:

REVISIONS △#	DESCRIPTION	BY	APPROVED	DATE

EMERGENCY POLICE – FIRE – RESCUE 911

REVISED: MARCH, 2012

FAIRFAX COUNTY, VIRGINIA
DEPARTMENT OF PUBLIC WORKS AND ENVIRONMENTAL SERVICES–UTILITIES DESIGN & CONSTRUCTION DIVISION
12000 GOVERNMENT CENTER PARKWAY, SUITE 463 FAIRFAX, VA., 22035–0052

OFFICE OF CAPITAL FACILITIES
703–324–5800

SUNRISE VALLEY DRIVE SIDEWALK – SOUTH SIDE
PLAN AND PROFILE
STA. 142+00.00 TO 149+00.00
HUNTER MILL DISTRICT, FAIRFAX COUNTY, VIRGINIA

CONTRACT NO. | PROJECT NO. 1400073–2012

SCALE HORIZ: 1"=25' VERT: 1"=5'
DESIGNED BY: JGH
DRAFTED BY: JGH
CHECKED BY: GRR
SHEET 9

FUND# 400–C40011 (124)

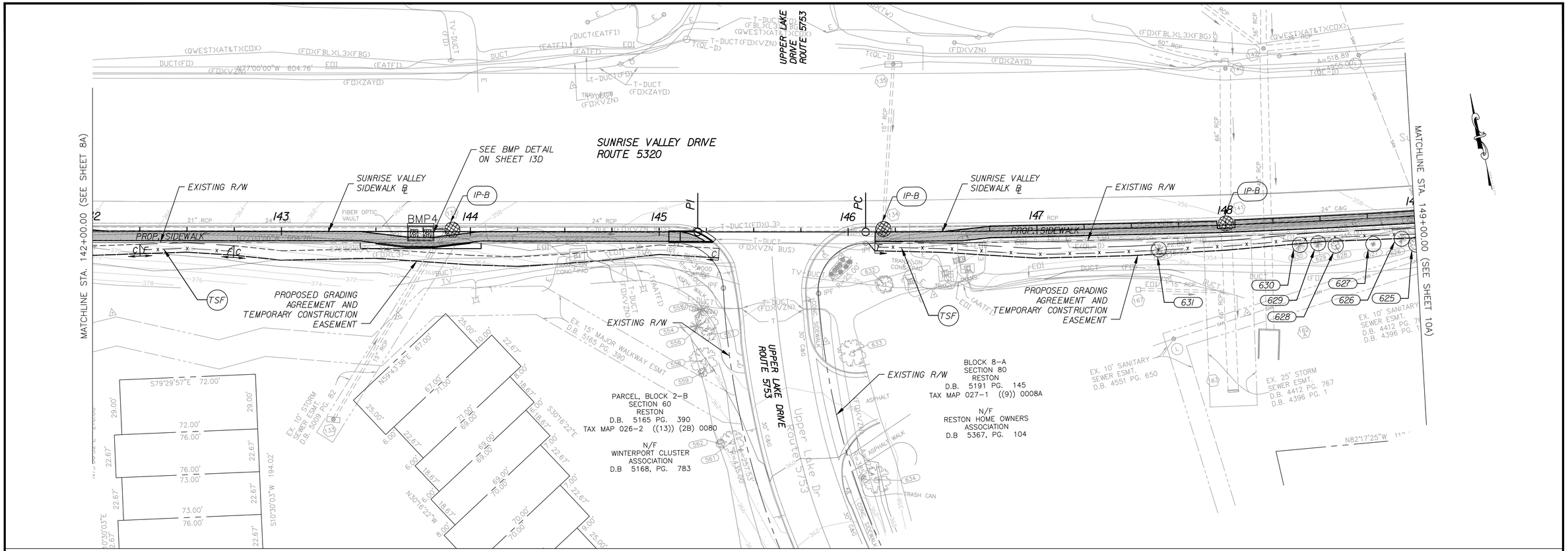

TREE #	SIZE, SPECIES, AND DRIPLINE DIAMETER	COMMENTS
624	8" CEDAR 15' DRIPLINE	PROTECT
625	9" LOCUST 25' DRIPLINE	PROTECT
626	9" CLEAR 20' DRIPLINE	PROTECT
627	6" CEDAR 10' DRIPLINE	PROTECT
628	7" DECIDUOUS 20' DRIPLINE	PROTECT
629	8" PINE 20' DRIPLINE	PROTECT
630	12" PINE 25' DRIPLINE	PROTECT
631	8" PINE 20' DRIPLINE	PROTECT

NOTES:

1. ALL E&SC MEASURES SHALL BE INSTALLED PRIOR TO THE START OF CONSTRUCTION.
2. MAINTAIN E&SC AS PRESCRIBED IN PLANS THROUGHOUT CONSTRUCTION.
3. REMOVE E&SC UPON FINAL GRADING, STABILIZATION, AND SEEDING.

LEGEND:

- C — CONSTRUCTION LIMITS IN CUTS
- F — CONSTRUCTION LIMITS IN FILLS
- EX. R/W / PROPERTY LINE
- PROP. RIGHT OF WAY
- PROP. GRADING AGREEMENT AND TEMP. CONST. ESM'T
- PROPOSED SIDEWALK
- DENOTES DEMOLITION OF EXISTING SIDEWALK
- IP-B — INLET PROTECTION TYPE B
- TSF — X — TEMPORARY SILT FENCE
- TREE REMOVAL
- TREE PROTECTION

TAX MAP 26-2, 27-1

EMERGENCY POLICE - FIRE - RESCUE 911

REVISED: MARCH, 2012

FAIRFAX COUNTY, VIRGINIA

DEPARTMENT OF PUBLIC WORKS AND ENVIRONMENTAL SERVICES-UTILITIES DESIGN & CONSTRUCTION DIVISION
12000 GOVERNMENT CENTER PARKWAY, SUITE 463 FAIRFAX, VA., 22035-0052

OFFICE OF CAPITAL FACILITIES
703-324-5800

GRAPHIC SCALE

25 0 25 50

1" = 25'

RK&K

10306 EATON PLACE, SUITE 240
FAIRFAX, VA 22030
(P) 703 246-0028
(F) 703 246-0123

REVISIONS

△#	DESCRIPTION	BY	APPROVED	DATE

SUNRISE VALLEY DRIVE SIDEWALK - SOUTH SIDE
EROSION AND SEDIMENT CONTROL PLAN
STA. 142+00.00 TO 149+00.00
HUNTER MILL DISTRICT, FAIRFAX COUNTY, VIRGINIA

CONTRACT NO. PROJECT NO. 1400073-2012

SCALE
HORIZ: 1"=25'
VERT: 1"=5'

DESIGNED BY: JGH
DRAFTED BY: JGH
CHECKED BY: GRR

SHEET 9A

DRAWING NAME:

FUND# 400-C40011 (124)

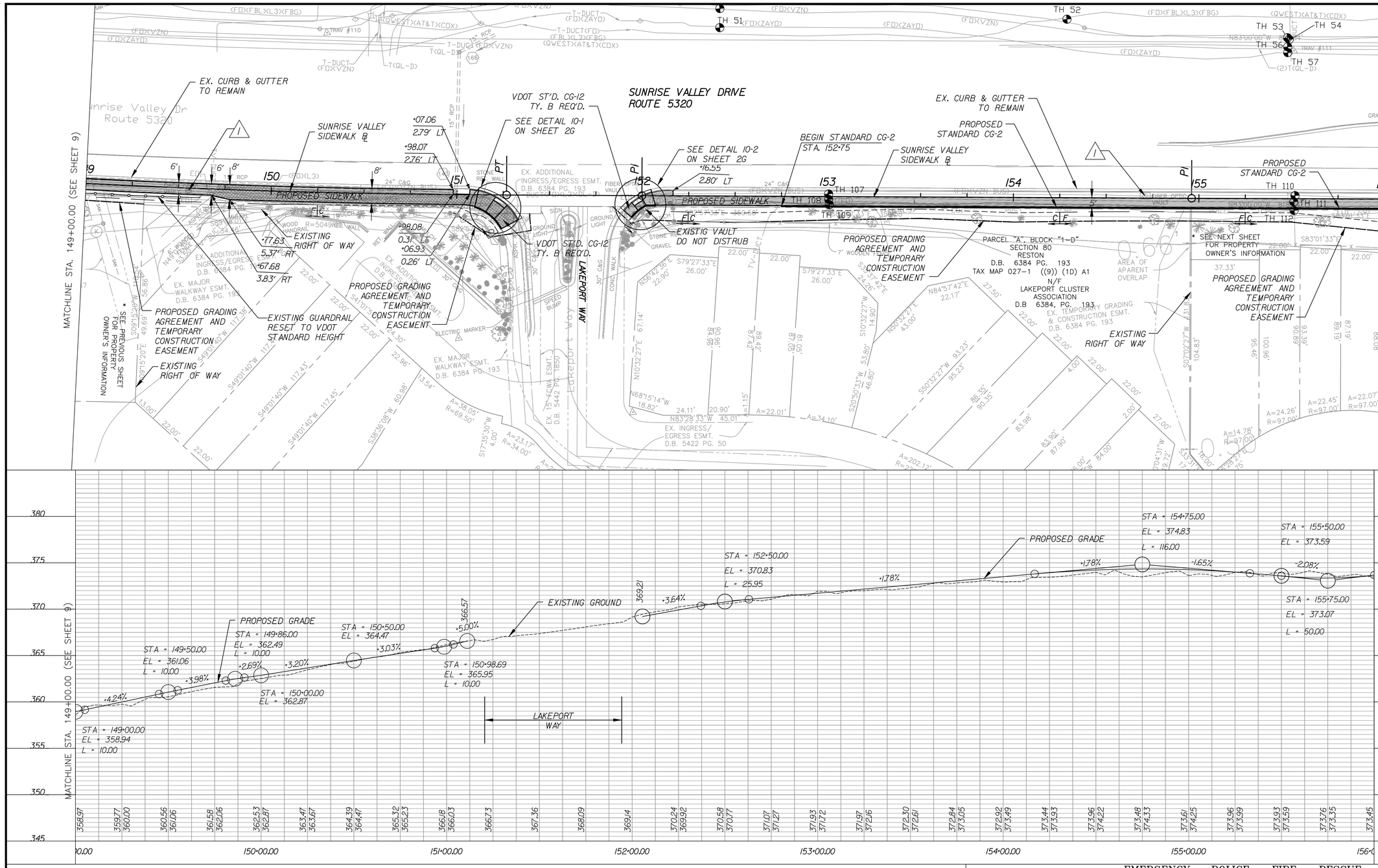

TAX MAP 27-1

LEGEND:

- C — CONSTRUCTION LIMITS IN CUTS
- F — CONSTRUCTION LIMITS IN FILLS
- EXISTING RIGHT OF WAY / PROPERTY LINE
- PROPOSED RIGHT OF WAY
- PROPOSED GRADING AGREEMENT AND TEMPORARY CONSTRUCTION EASEMENT
- DENOTES DEMOLITION OF EXISTING SIDEWALK
- DENOTES ASPHALT OVERLAY AND CURB AND GUTTER REPLACEMENT FOR EXISTING DRIVEWAY
- PROPOSED SIDEWALK
- UTILITY TEST HOLE
- 1 EXISTING HANDHOLE / VAULT TO BE RELOCATED BY OTHERS
- 2 ADJUST EXISTING UTILITY COVER TO PROPOSED GRADE

THESE PLANS ARE UNFINISHED AND ARE NOT TO BE USED FOR ANY TYPE OF CONSTRUCTION.

NOTE: TEST HOLES PROVIDED BY SO-DEEP INC. AT THE REQUEST OF THE COUNTY. SEE SHEETS 14A-14F FOR MORE INFO.

GRAPHIC SCALE
25 0 25 50
1" = 25'

RK&K
10306 EATON PLACE, SUITE 240
FAIRFAX, VA 22030
(P) 703 246-0028
(F) 703 246-0123

DRAWING NAME:

REVISIONS △#	DESCRIPTION	BY	APPROVED	DATE

EMERGENCY POLICE – FIRE – RESCUE 911

REVISED: MARCH, 2012

FAIRFAX COUNTY, VIRGINIA
DEPARTMENT OF PUBLIC WORKS AND ENVIRONMENTAL SERVICES–UTILITIES DESIGN & CONSTRUCTION DIVISION
12000 GOVERNMENT CENTER PARKWAY, SUITE 463 FAIRFAX, VA., 22035–0052

OFFICE OF CAPITAL FACILITIES
703-324-5800

SUNRISE VALLEY DRIVE SIDEWALK – SOUTH SIDE
PLAN AND PROFILE
STA. 149+00.00 TO 156+00.00
HUNTER MILL DISTRICT, FAIRFAX COUNTY, VIRGINIA

CONTRACT NO. PROJECT NO. 1400073-2012

SCALE		SHEET
HORIZ: 1"=25'	DESIGNED BY: JGH	10
VERT: 1"=5'	DRAFTED BY: JGH	
	CHECKED BY: GRR	

FUND# 400-C40011 (124)

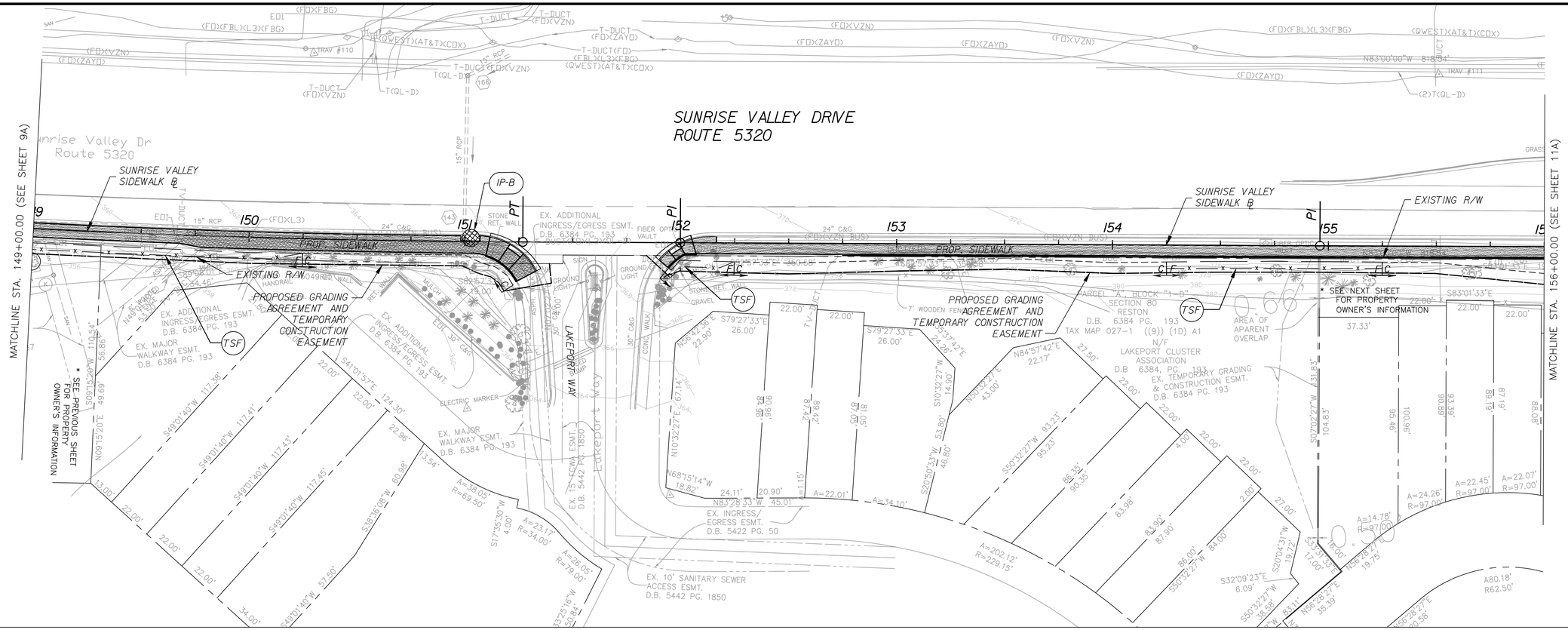

NOTES:

1. ALL E&SC MEASURES SHALL BE INSTALLED PRIOR TO THE START OF CONSTRUCTION.
2. MAINTAIN E&SC AS PRESCRIBED IN PLANS THROUGHOUT CONSTRUCTION.
3. REMOVE E&SC UPON FINAL GRADING, STABILIZATION, AND SEEDING.

LEGEND:

- C — CONSTRUCTION LIMITS IN CUTS
- F — CONSTRUCTION LIMITS IN FILLS
- EX. R/W / PROPERTY LINE
- PROP. RIGHT OF WAY
- PROP. GRADING AGREEMENT AND TEMP. CONST. ESM'T
- PROPOSED SIDEWALK
- DENOTES DEMOLITION OF EXISTING SIDEWALK
- IP-B — INLET PROTECTION TYPE B
- TSF — X — TEMPORARY SILT FENCE
- TREE REMOVAL
- TREE PROTECTION

TAX MAP 27-1

EMERGENCY POLICE – FIRE – RESCUE 911 REVISED: MARCH, 2012

FAIRFAX COUNTY, VIRGINIA

DEPARTMENT OF PUBLIC WORKS AND ENVIRONMENTAL SERVICES–UTILITIES DESIGN & CONSTRUCTION DIVISION
12000 GOVERNMENT CENTER PARKWAY, SUITE 463 FAIRFAX, VA., 22035–0052

OFFICE OF CAPITAL FACILITIES
703–324–5800

GRAPHIC SCALE
25 0 25 50
1" = 25'

RK&K
10306 EATON PLACE, SUITE 240
FAIRFAX, VA 22030
(P) 703 246-0028
(F) 703 246-0123

REVISIONS

△#	DESCRIPTION	BY	APPROVED	DATE

SUNRISE VALLEY DRIVE SIDEWALK – SOUTH SIDE
EROSION AND SEDIMENT CONTROL PLAN
STA. 149+00.00 TO 156+00.00
HUNTER MILL DISTRICT, FAIRFAX COUNTY, VIRGINIA

CONTRACT NO. PROJECT NO. 1400073-2012

SCALE HORIZ: 1"=25' VERT: 1"=5'
DESIGNED BY: JGH
DRAFTED BY: JGH
CHECKED BY: GRR
SHEET 10A

FUND# 400-C40011 (124)

DRAWING NAME:

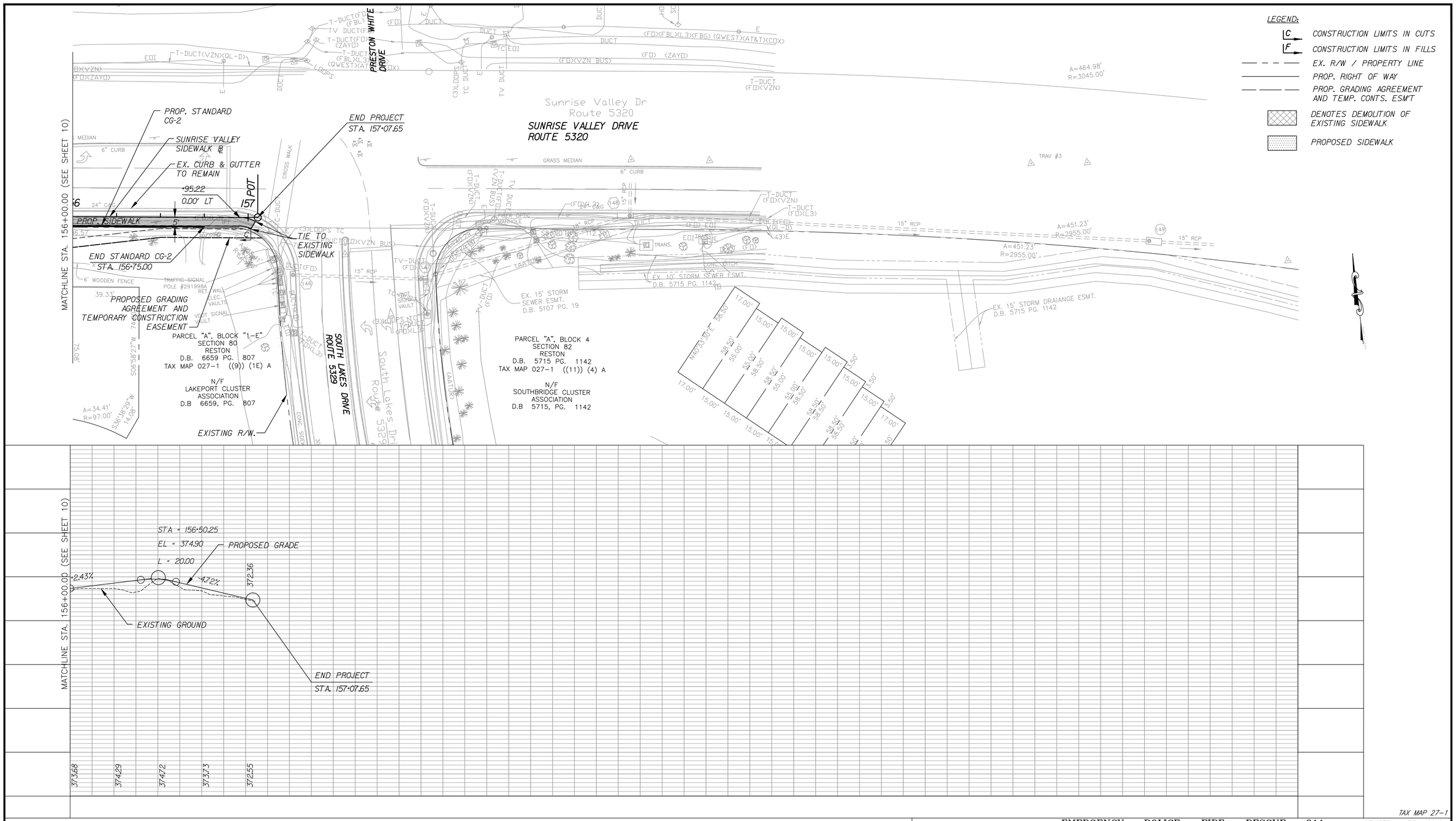

1. EXISTING HANDHOLE / VAULT TO BE RELOCATED BY OTHERS
2. ADJUST EXISTING UTILITY COVER TO PROPOSED GRADE

GRAPHIC SCALE
25 0 25 50
1" = 25'

RK&K
10306 EATON PLACE, SUITE 240
FAIRFAX, VA 22030
(P) 703 246-0028
(F) 703 246-0123

EMERGENCY POLICE – FIRE – RESCUE 911

REVISED: MARCH, 2012

FAIRFAX COUNTY, VIRGINIA
DEPARTMENT OF PUBLIC WORKS AND ENVIRONMENTAL SERVICES–UTILITIES DESIGN & CONSTRUCTION DIVISION
12000 GOVERNMENT CENTER PARKWAY, SUITE 463 FAIRFAX, VA., 22035–0052

OFFICE OF CAPITAL FACILITIES
703–324–5800

REVISIONS

△#	DESCRIPTION	BY	APPROVED	DATE

SUNRISE VALLEY DRIVE SIDEWALK – SOUTH SIDE
PLAN AND PROFILE
STA. 156+00.00 TO 157+07.65
HUNTER MILL DISTRICT, FAIRFAX COUNTY, VIRGINIA

CONTRACT NO. PROJECT NO. 1400073–2012

SCALE
HORIZ: 1"=25'
VERT: 1"=5'

DESIGNED BY: JGH
DRAFTED BY: JGH
CHECKED BY: GRR

SHEET 11

DRAWING NAME:

FUND# 400–C40011 (124)

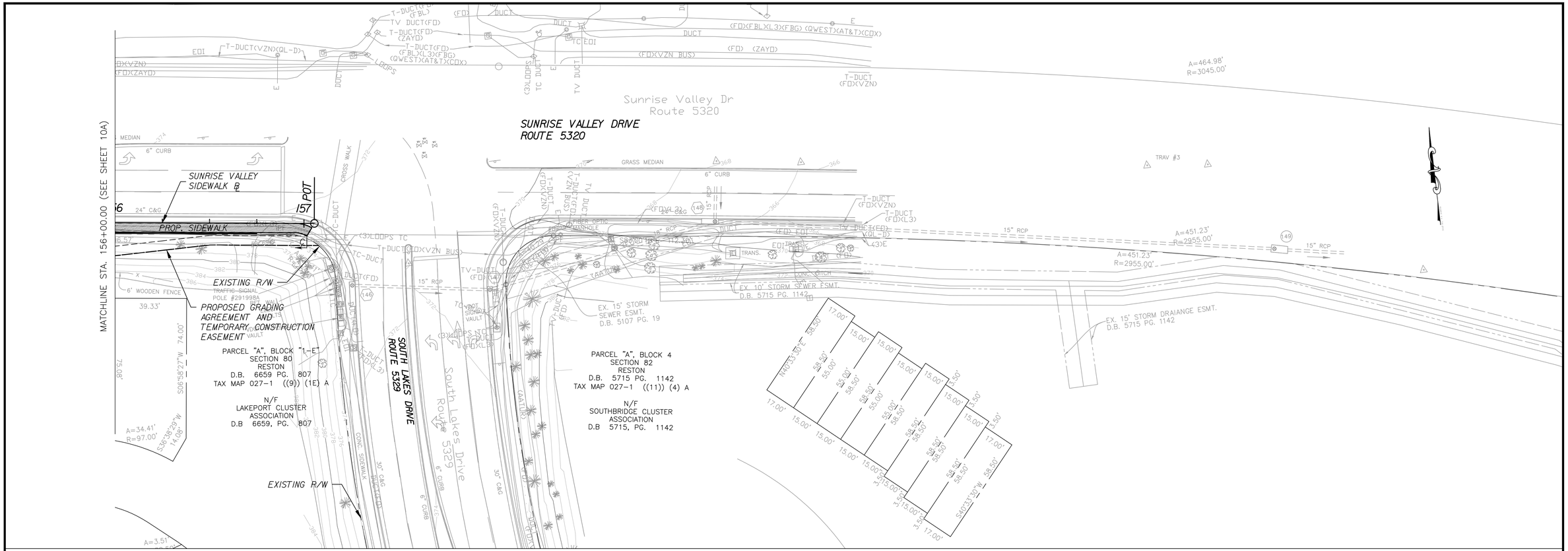

NOTES:

1. ALL E&SC MEASURES SHALL BE INSTALLED PRIOR TO THE START OF CONSTRUCTION.
2. MAINTAIN E&SC AS PRESCRIBED IN PLANS THROUGHOUT CONSTRUCTION.
3. REMOVE E&SC UPON FINAL GRADING, STABILIZATION, AND SEEDING.

LEGEND:

- C — CONSTRUCTION LIMITS IN CUTS
- F — CONSTRUCTION LIMITS IN FILLS
- EX. R/W / PROPERTY LINE
- PROP. RIGHT OF WAY
- PROP. GRADING AGREEMENT AND TEMP. CONST. ESM'T
- PROPOSED SIDEWALK
- DENOTES DEMOLITION OF EXISTING SIDEWALK
- IP-B — INLET PROTECTION TYPE B
- TSF — X — TEMPORARY SILT FENCE
- TREE REMOVAL
- TREE PROTECTION

TAX MAP 27-1

EMERGENCY POLICE – FIRE – RESCUE 911

REVISED: MARCH, 2012

FAIRFAX COUNTY, VIRGINIA

DEPARTMENT OF PUBLIC WORKS AND ENVIRONMENTAL SERVICES–UTILITIES DESIGN & CONSTRUCTION DIVISION
12000 GOVERNMENT CENTER PARKWAY, SUITE 463 FAIRFAX, VA., 22035–0052

OFFICE OF CAPITAL FACILITIES
703–324–5800

GRAPHIC SCALE

25 0 25 50

1" = 25'

RK&K

10306 EATON PLACE, SUITE 240
FAIRFAX, VA 22030
(P) 703 246-0028
(F) 703 246-0123

REVISIONS

△#	DESCRIPTION	BY	APPROVED	DATE

SUNRISE VALLEY DRIVE SIDEWALK – SOUTH SIDE

EROSION AND SEDIMENT CONTROL PLAN
STA. 156+00.00 TO 157+07.65
HUNTER MILL DISTRICT, FAIRFAX COUNTY, VIRGINIA

CONTRACT NO. PROJECT NO. 1400073-2012

SCALE
HORIZ: 1"=25'
VERT: 1"=5'

DESIGNED BY: JGH
DRAFTED BY: JGH
CHECKED BY: GRR

SHEET 11A

DRAWING NAME:

FUND# 400-C40011 (124)